This is a digital copy of a book that was preserved for generations on library shelves before it was carefully scanned by Google as part of a project to make the world's books discoverable online.

It has survived long enough for the copyright to expire and the book to enter the public domain. A public domain book is one that was never subject to copyright or whose legal copyright term has expired. Whether a book is in the public domain may vary country to country. Public domain books are our gateways to the past, representing a wealth of history, culture and knowledge that's often difficult to discover.

Marks, notations and other marginalia present in the original volume will appear in this file - a reminder of this book's long journey from the publisher to a library and finally to you.

**Usage guidelines**

Google is proud to partner with libraries to digitize public domain materials and make them widely accessible. Public domain books belong to the public and we are merely their custodians. Nevertheless, this work is expensive, so in order to keep providing this resource, we have taken steps to prevent abuse by commercial parties, including placing technical restrictions on automated querying.

We also ask that you:

+ *Make non-commercial use of the files* We designed Google Book Search for use by individuals, and we request that you use these files for personal, non-commercial purposes.

+ *Refrain from automated querying* Do not send automated queries of any sort to Google's system: If you are conducting research on machine translation, optical character recognition or other areas where access to a large amount of text is helpful, please contact us. We encourage the use of public domain materials for these purposes and may be able to help.

+ *Maintain attribution* The Google "watermark" you see on each file is essential for informing people about this project and helping them find additional materials through Google Book Search. Please do not remove it.

+ *Keep it legal* Whatever your use, remember that you are responsible for ensuring that what you are doing is legal. Do not assume that just because we believe a book is in the public domain for users in the United States, that the work is also in the public domain for users in other countries. Whether a book is still in copyright varies from country to country, and we can't offer guidance on whether any specific use of any specific book is allowed. Please do not assume that a book's appearance in Google Book Search means it can be used in any manner anywhere in the world. Copyright infringement liability can be quite severe.

**About Google Book Search**

Google's mission is to organize the world's information and to make it universally accessible and useful. Google Book Search helps readers discover the world's books while helping authors and publishers reach new audiences. You can search through the full text of this book on the web at `http://books.google.com/`

COURTWAY LIBRARY
HC 1A8A F

# FEEBLEMINDEDNESS

## ITS CAUSES AND CONSEQUENCES

GODDARD

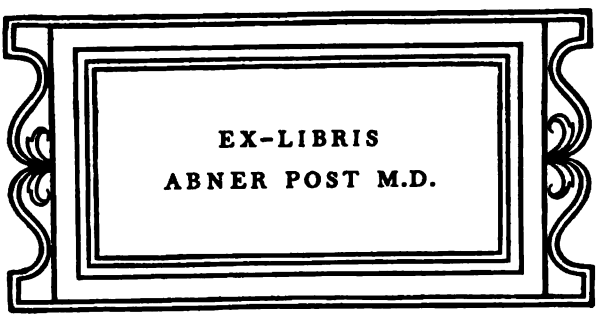
EX-LIBRIS
ABNER POST M.D.

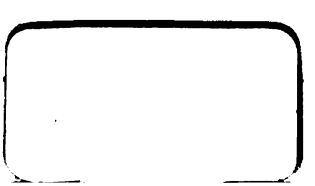

# FEEBLE-MINDEDNESS

THE MACMILLAN COMPANY
NEW YORK · BOSTON · CHICAGO · DALLAS
ATLANTA · SAN FRANCISCO

MACMILLAN & CO., LIMITED
LONDON · BOMBAY · CALCUTTA
MELBOURNE

THE MACMILLAN CO. OF CANADA, LTD.
TORONTO

# FEEBLE-MINDEDNESS

## ITS CAUSES AND CONSEQUENCES

BY

HENRY HERBERT GODDARD, PH.D.

DIRECTOR OF THE RESEARCH LABORATORY OF THE TRAINING SCHOOL AT VINELAND, NEW JERSEY, FOR FEEBLE-MINDED GIRLS AND BOYS

BOSTON MEDICAL LIBRARY
IN THE
FRANCIS A. COUNTWAY
LIBRARY OF MEDICINE

New York
THE MACMILLAN COMPANY
1914

*All rights reserved*

COPYRIGHT, 1914,
BY THE MACMILLAN COMPANY.

Set up and electrotyped. Published July, 1914.

Norwood Press
J. S. Cushing Co. — Berwick & Smith Co.
Norwood, Mass., U.S.A.

To

EDWARD R. JOHNSTONE

SUPERINTENDENT OF THE TRAINING SCHOOL
AT VINELAND

FRIEND AND CO-WORKER, WHOSE DEVOTION TO THE INTERESTS
OF THOSE WHOSE MINDS HAVE NOT DEVELOPED
NORMALLY PROMPTED THE ESTABLISH-
MENT OF THIS DEPARTMENT
OF RESEARCH

# PREFACE

THIS book is in the nature of a report on work done at the Vineland Research Laboratory during the past five years in an attempt to discover the causes of the feeble-mindedness of the children in the Institution. No attempt has been made to treat exhaustively any of the topics that have come up for consideration.

The report is far from complete. Our cases are still being studied and the data are so incomplete in many ways that one is tempted to withhold publication until the results of other studies now in progress could be added. Such a procedure would have given a more satisfactory product. But in view of the great popular interest in these topics and the demand for information, we have put aside personal preferences and prepared what data we had in as available form as we could.

The 327 cases here presented constitute a unitary group. They have not been selected; they are of all ages and grades of defect. They include every case that was investigated, and every child whose home was in New Jersey or near by was investigated. Only those were omitted whose homes were so far away that the cost of travel for our field-workers was prohibitive.

We have included in this book all the cases, so that the reader might see the entire group on which our statistics are based. Another reason for including them is because it is believed that other students with other interests will find in this material much that we have made no attempt to use. In this way the data may have a value beyond anything we ourselves have deduced from them.

It is hoped that not only the scientist but the lay reader, the parent and the teacher will find help on their particular prob-

lems, by discovering among the many cases some that are like the ones in whom they happen to be interested. Such readers must be warned that no two cases are exactly alike and it would be the height of unwisdom to conclude that precisely the same causes existed or results were obtainable in two cases whose descriptions might seem to tally. Nevertheless the discovery of apparently similar cases would be of value and would have considerable probability of agreement in other particulars than those described in the text.

The question of form of presentation has been a difficult one to settle. The material is largely of a scientific character and will, we trust, be of interest to the scientific man. It is also of profound importance to the layman. We have, therefore, attempted the always difficult task of presenting scientific information in a popular form. The difficulties of such a course are so great that we cannot hope for a large measure of success. If we have been able to spread the facts before the reader in such a way that they are intelligible and can be used, we shall be satisfied.

We believe that the material has been so treated as to render it entirely impersonal. All names have been changed, dates and localities have been given with a slight variation, so that it would be impossible to identify any of the cases by these means. The photographs reproduced are those of children who either have no relatives or whose relatives have no possible objection to such publication.

As for conclusions from the facts presented, we have attempted to adhere closely to the facts. Any theories or hypotheses that have been presented have been merely those that were suggested by the data themselves, and have been worked out in an effort to understand what the data seem to comprise. Some of the conclusions are as surprising to the writer and as difficult for him to accept as they are likely to be to many readers. The relation of alcohol to feeblemindedness, for example, is to the writer a complete surprise.

That normal intelligence seems to be a unit character and transmitted in true Mendelian fashion is a conclusion that was forced upon us by the figures, and one that is difficult to make agree with previous conceptions. It is true that in *The Kallikak Family* we hinted at this, but the preliminary examination of the larger mass of material had thoroly shaken our confidence and had left us with the feeling that it would not be proved. Even now we are far from believing the case settled. The problem is too deep to be thus easily disposed of.

On the other hand, if we admit that our data do not conclusively prove to the satisfaction of everybody that the Mendelian formula applies to the inheritance of intelligence, we are equally in doubt in regard to the conclusions of those who believe they have demonstrated the opposite. Statistical theories and methods have a great value in modern science, but their application to the human problem is fraught with many and serious liabilities to error. In inductive science one must always make some assumptions, but too many assumptions spoil the inference. The value of the conclusion may be, perhaps, inversely proportional to the square of the number of assumptions.

No one knows all about feeble-mindedness but some know less than others and current literature on the subject is largely based on assumptions, some of which are known to be false while others are seriously to be doubted.

The chapter "Is Feeble-mindedness a Unit Character?" was written under the rather strong impression that feeble-mindedness is not a unit character. After the data were counted and seemed to show so conclusively that it is Mendelian we were inclined to omit the first part of the discussion on the unit character, but decided to leave it, if for no other reason, to show the stages thru which our thot has developed in the course of this study. The former view may yet be correct, but here are facts that cannot be ignored. It may be that we, like Horace, will be "compelled to go over again the road already traveled." It is quite possible that there are laws of

human life and mind that cannot be proved by algebra or disproved by calculus.

In the attempt to discuss such a mass of data as is here presented, the writer has necessarily dipped into many fields where he is not thoroly at home. Here especially it is probable that he has fallen into errors. He will always welcome corrections and suggestions from those readers who are at home in these various fields.

In conclusion the writer would acknowledge his indebtedness to the many persons who have helped him in this work. To do so by name would be to add pages to this book. It is, perhaps, not necessary to refer to our laboratory staff, for this book goes forth as a laboratory product, and every one who is, or has been during the past five years, associated with the Research Department has helped, directly or indirectly, in its preparation. Likewise the members of the Training School outside of the laboratory have thru their coöperation with the Research Department aided in the production of this study.

It goes without saying that there would have been no such work without the coöperation of the Superintendent and the Trustees of the Institution.

It must not be left unsaid that the very existence of the research work on its present extended plan is largely dependent upon one man. Many men have means; some men appreciate the value of scientific research; a few men have faith enough in the value of truth to take steps in the dark. Such a man is Mr. Samuel S. Fels, of Philadelphia, friend, adviser, inspirer and promoter of this work.

# CONTENTS

## THE PROBLEM


CHAPTER — PAGES

I. SOCIAL PROBLEMS . . . . . 1–20

Feeble-mindedness Defined. The Part it Plays in the Problems of Crime, Alcoholism, Prostitution, Pauperism, Ne'er-do-wells, and Truants. Four Lines of Investigation.


## THE DATA


II. RELIABILITY OF THE DATA . . . . . 21–46

Manner of obtaining the Data. Qualifications of Field Workers; their Work Tested; Reinvestigated Cases; a Sample Report.

III. THE DATA . . . . . 47–434

Case Histories and Pedigree Charts of 327 Families with 121 Portraits of Children. Explanation of Symbols. Hereditary Feeble-mindedness — Cases 1–164; Probably Hereditary — Cases 165–198. Neuropathic Ancestry — Cases 199–235. Accident Group — Cases 236–292. No Assignable Cause — Cases 293–300. Unclassified — Cases 301–327.

IV. CAUSES . . . . . 435–465

Discussion of Causes of Feeble-mindedness as they appear from our Data. Causes Assigned by Parents or Physicians. Hereditary Feeble-mindedness. Probably Hereditary. Mental Age in Relation to Feeble-mindedness. Neuropathic Ancestry. Accidents (including disease), Accidents before or at Birth, the Mongolian Group, Accidents after Birth, Meningitis. No Cause Discovered. Unclassified Cases.

CHAPTER PAGES

V. DISCUSSION OF THE DATA . . . . . 466–532

Summaries of the Charts. Conditions or Diseases found accompanying Feeble-mindedness (with Tables), Alcoholism; Paralytic, Epileptic, Insane or Syphilitic Parents; Tuberculosis; Sexual Immorality; Illegitimate Children; Paralysis. Insanity and Feeble-mindedness. Genius and Feeble-mindedness. Epilepsy and Feeble-mindedness. Criminality and Feeble-mindedness. Syphilis; Blindness and Deafness; Consanguinity; Twins; Neuroses, Migraine, etc.; Persons in Other Institutions. Tables. Summaries.

VI. MENDEL'S LAW OF INHERITANCE . . . . . 533–538

Mendel's Experiments. The Law. The Explanation.

VII. IS FEEBLE-MINDEDNESS A UNIT CHARACTER? . . . 539–547

The Negative Side Considered. The Other Side.

VIII. IS THE INHERITANCE OF FEEBLE-MINDEDNESS IN ACCORDANCE WITH THE MENDELIAN LAW? . . . 548–557

The Types of Matings Considered. Our Results. The General Intelligence Theory.

## CONCLUSIONS

IX. EUGENICS . . . . . 558–567

The Eugenic Program. Colonization and Sterilization.

X. PRACTICAL APPLICATIONS . . . . . 568–590

Must first Recognize and Treat the Feeble-minded that are in the Hands of the Law; the Pauper, the Criminal, the Drunkard, the Prostitute, etc. Three Principles that Determine Treatment and Training: Levels of Intelligence, Levels Inherited, Relation of Levels of Intelligence to Trainability. Care of Mental Defectives. Industrial Classification. Necessity of Recognition of the Moron. What is to be done with People of Low Intelligence? Résumé.

# FEEBLE-MINDEDNESS

# FEEBLE-MINDEDNESS:

## ITS CAUSES AND CONSEQUENCES

### CHAPTER I

### SOCIAL PROBLEMS

In our attempt to solve the problems resulting from congregate life, that of crime, of pauperism, of intemperance and of the social evil, we have heretofore assumed without question, that all of the people who constitute "the problem" are at least responsible, and that what they do is done *in spite of* knowledge and ability to do better. Altho any thotful person might divide humanity into the responsible and the irresponsible, the sane and the insane, or the normal and the mentally defective, he would define the irresponsible as meaning the insane and the mentally defective and by these terms designate that group of persons who are incapable of taking care of themselves and are such people as we shut up in insane hospitals or idiot asylums. The inmates of these Institutions do not constitute a serious social problem. They are easily recognized and because all appreciate the necessity they are easily placed in Institutions where they are cared for with more or less success. To be sure this has been no inconsiderable task. Institutions for the insane and feeble-minded are continually increasing in size and number.

But great as is the task that we have performed in caring for the insane and the feeble-minded, we have a far greater task in connection with the criminal, the pauper and the intemperate.

With these classes it is more than a problem of building institutions. It is the question of recognizing the true nature of these people. This is not easy if we look only at the end product. The criminal in prison, the pauper in the almshouse, the intemperate man in the gutter presents a spectacle which may arouse our pity or our disgust, but it tells us nothing of the original nature of the man or how he came to be in his present condition. Without knowing the answers to these questions it is impossible for our care of these persons to be satisfactory. Every social worker knows that it is not satisfactory.

It is proposed in this book to consider these problems from a new standpoint. We start out with an hypothesis somewhat new altho it is recognized by those who have studied this special group. The novelty is its application to the larger problems of social life.

This hypothesis may be stated as follows: there are all grades of responsibility, from zero to the highest; or, there are all grades of intelligence from practically none up to that of the genius or the most gifted. Responsibility varies according to the intelligence. Even among those people whom we have usually considered thoroly normal and responsible, there are environments in which they are responsible and others in which they cannot be so considered. They have intelligence enough to live in certain environments and care for themselves but in a more complex social group it is impossible for them to function properly. As Binet points out, normal intelligence is a relative matter and that which is sufficient for a French peasant out in the country is not sufficient for a Frenchman in Paris. That intelligence which carries a person thru life under a simpler form of society is insufficient in many of the complex situations of the present day. It is probable that it is this relativity that has disturbed us and led us to go so far without seeing the real issue. In other words the persons who constitute our social problems are of a type that in the past and under simpler environments have

seemed responsible and able to function normally, but for whom the present environment has become too complex so that they are no longer responsible for their actions. We have not realized this, so gradual have been the changes that have come over our civilization.

On this view the problem is to be solved partly by adaptation and partly by elimination. An ideal procedure would be to draw the line between responsibility and irresponsibility. Draw one line at that point below which a person of that intelligence is not desirable or useful *in any environment*. Those above that line must again be divided into persons of sufficient intelligence to function in the simplest environment, those of higher intelligence who can function in a more complex environment and so on to the most complex. Such a scheme is of course too mechanical and is impossible, nevertheless it may be held in view as something toward which we may work altho without any desire to attain to that extreme position.

As a matter of fact this is what we attempt to do now but we go about it in a crude bungling way. The problem for society to solve is to give some intelligent direction to this grading of responsibility so that it may be less bungling and more practical. We must measure the intelligence. Knowing the grade of intelligence we may know the degree of responsibility. Knowing the degree of responsibility we know how to treat.

Persons who are recognized as being below the line of normal intelligence have been at different periods called by different names. Originally called idiots they were later designated as imbeciles and still later as feeble-minded. Since more study has been put upon the problem it has become necessary to designate different degrees of defect and by common consent the custom has grown up of applying the term idiot to the lowest grade, imbecile to the middle grade, and feeble-minded to the highest.

In England this is the common classification. As a general term for all, the expression "aments" is sometimes used. In

America we have used the expression feeble-minded both in a specific and in a generic sense, specifically to designate the highest division, and generically the whole group. Our Institutions for these defectives are generally known as Institutions for the Feeble-minded.

Since the introduction of the Binet Measuring Scale of Intelligence and the grading of children by their mental age, a closer classification has been followed. The American Association for the study of the feeble-minded has adopted the following scheme: The term idiot is used to designate those of mental age up to and including two years; imbecile, those of from three to seven years, inclusive. For those from seven to twelve a new term has been invented; they are now called morons. The term moron, therefore, in America designates almost exactly what is meant by "feeble-minded" in England.

Feeble-mindedness has been defined as a "state of mental defect existing from birth or from an early age and due to incomplete or abnormal development in consequence of which, the person affected is incapable of performing his duties as a member of society in the position of life to which he is born." If we leave out those whom society has already recognized as idiots or imbeciles, we have the higher group, the specifically feeble-minded or moron, which has been defined by the Royal College of Physicians in the following terms: "One who is capable of earning his living under favorable circumstances, but is incapable from mental defect existing from birth or from an early age (*a*) of competing on equal terms with his normal fellows or (*b*) of managing himself and his affairs with ordinary prudence." This definition, it is seen, would include a great many whom we have not thot of as feeble-minded; this is because the characteristics of the moron are not those which are usually associated in the popular mind with persons of sub-normal intelligence. Morons are often normal looking with few or no obvious stigmata of degeneration frequently able to talk fluently; their conversation while

marked by poverty of thought or even silliness nevertheless commonly passes as the result of ignorance.

If it is discovered that they cannot learn they are thot of as dull or slow but not as actually defective and incapable of learning. So strong is their resemblance to the normal person that altho they are well understood by those who have studied them and have dealt with them in Institutions, yet there are many people even to-day who refuse to admit that they cannot be trained to function like normal people. Yet they are the persons who make for us our social problems. The emphasis here is on the word "*incapable.*" This is the thing that we have heretofore ignored. We have known that these people *did not* compete successfully and that they *did not* manage their affairs with ordinary prudence, but we have not recognized that they were fundamentally *incapable* of so doing. We have assumed rather that they could do it if they would. All of our efforts have been toward making them do that which we believed they were capable of doing. This *incapacity* once recognized, our problem takes on an entirely different aspect.

But what right have we to consider that this is incapacity? What evidences are there that this is a truer view than the older one of unwillingness to do the right? The answer to this must come from experience — no theory will apply here. If we could test all these people then we would realize their incapacity. But some one says this is impossible — there are too many factors involved. There are so many excuses for a criminal or a pauper or an intemperate person; he may have been badly trained, his school education nil, his home environment bad, and so on thru a long list, each in itself enough to account for his condition. Consequently there is no way of demonstrating that there was no will nor materials for developing a will.

The fact is, altho it is not generally realized, that we have such experiments and many of them. The answer is not as doubtful as it seems. Our Institutions for the Feeble-minded

have in the later years received many children who belong to this higher grade group. In these Institutions children have been held and trained under ideal conditions and in many cases at least by the most approved methods. The result is always the same. The children proved to be *incapable.* There is no doubt. It is not a question of wilful wrongdoing; it is *incapacity* to do differently. As a result we have a line drawn marking a degree of intelligence to which these people do not reach; consequently they are incapable of functioning properly in our highly organized society.

The percentage of the population that belongs to the moron group is undetermined. Those who have studied the problem most deeply and who are best able to recognize the moron, usually consider that about 2% of the school population is feeble-minded, and the larger part of these are morons. Those of less experience, who still regard many of these people as merely backward or dull, insist that this percentage is far too large. On the other hand, some investigators in certain localities have made it as high as 3%. The determination of the actual number can only come from a careful study of all dull, backward children and a careful record of how many of them actually make good later in life and how many prove incapable of taking their place in society. At present it is not very important to know the actual number. It is sufficient to know that there are many more of them than we have recognized in the past and that they must be cared for.

Let us now consider some of the specific social problems and the part that feeble-mindedness plays in them.

## THE PROBLEM OF CRIME

Society's attitude toward the criminal has gone thru a decided evolution, but that evolution has been in the line of its treatment rather than of its understanding of him and of his responsibility. Almost up to the present time there has been a practically uni-

versal assumption of the responsibility of all except the very youngest children and those recognized as idiots, imbeciles or insane. The oldest method of treatment was in accordance with the idea of vengeance, an eye for an eye. The god Justice was satisfied if the offender suffered an equal amount with those whom he had made suffer. Later came the idea of punishing an offender for the sake of deterring others from similar crimes. This is the basis of much of our present penal legislation. But students of humanity have gone farther and now realize that the great function of punishment is to reform the offender.

We have had careful studies of the offender from this standpoint. Studies have been made of his environment and of those things which have led him into crime. Attempts have been made to remove these conditions, so that criminals shall not be made, or having reformed, they shall not again be led into a criminal life. A great deal has been accomplished along these lines. But we shall soon realize, if we have not already, that on this track there is a barrier which we cannot cross. Environment will not, of itself, enable all people to escape criminality. The problem goes much deeper than environment. It is the question of responsibility. Those who are born without sufficient intelligence either to know right from wrong, or those, who if they know it, have not sufficient will-power and judgment to make themselves do the right and flee the wrong, will ever be a fertile source of criminality. This is being recognized more and more by those who have to do with criminals. We have no thot of maintaining that all criminals are irresponsible. Altho we cannot determine at present just what the proportion is, probably from 25 % to 50 % of the people in our prisons are mentally defective and incapable of managing their affairs with ordinary prudence. A great deal has been written about the criminal type and its various characteristics. It is interesting to see in the light of modern knowledge of the defective that these

descriptions are almost without exception accurate descriptions of the feeble-minded.

The hereditary criminal passes out with the advent of feeble-mindedness into the problem. The criminal is not born; he is made. The so-called criminal type is merely a type of feeble-mindedness, a type misunderstood and mistreated, driven into criminality for which he is well fitted by nature. It is hereditary feeble-mindedness not hereditary criminality that accounts for the conditions. We have seen only the end product and failed to recognize the character of the raw material.

Perhaps the best data on this problem come from the prisons and the reformatories. It is quite surprising to see how many persons who have to do with criminals are coming forward with the statement that a greater or less percentage of the persons under their care are feeble-minded. They had always known that a certain proportion were thus affected, but since the recognition of the moron and of his characteristics, the percentage is found ever higher and higher. The highest of all come from the Institutions for Juveniles, partly because it is difficult to believe that an adult man or woman who makes a fair appearance but who lacks in certain lines, is not simply ignorant. We are more willing to admit the defect of children. The discrepancy is also due to the fact that the mental defectives are more apt to die young leaving among the older prisoners those who are really intelligent.

The following list of reformatories and institutions for delinquents with the estimated number of defectives undoubtedly gives a fair idea of the amount of feeble-mindedness. The differences in the percentages are probably due more to the standards used in estimating the defective than to actual differences in numbers. It is the most discouraging to discover that the more expert is the examiner of these groups, the higher is the percentage of feeble-minded found. For example, Dr. Olga Bridgman, who has made one of the most careful studies on

record, finds that 89 % of the girls at Geneva, Illinois, are defective.

| Institution | Per Cent Defective |
|---|---|
| St. Cloud Minnesota Reformatory | 54 |
| Rahway Reformatory, New Jersey (Binet) * | 46 |
| Bedford Reformatory, New York — under 11 years | 80 |
| Lancaster, Massachusetts (girl's reformatory) | 60 |
| Lancaster, Massachusetts, 50 paroled girls | 82 |
| Lyman School for Boys, Westboro, Massachusetts | 28 |
| Pentonville, Illinois, Juveniles | 40 |
| Massachusetts Reformatory, Concord | 52 |
| Newark, New Jersey, Juvenile Court | 66 |
| Elmira Reformatory | 70 |
| Geneva, Illinois (Binet) | 89 |
| Ohio Boys School (Binet) | 70 |
| Ohio Girls School (Binet) | 70 |
| Virginia, 3 Reformatories (Binet) | 79 |
| New Jersey State Home for Girls | 75 |
| Glen Mills Schools, Pennsylvania, Girl's Department, about | 72 |

The percentages above given are not in all cases the official figures given out by the examiners, but are the author's interpretation based on the facts given in the reports.

Unfortunately we cannot average the percentages because the reports from which these figures were taken do not always state the number of persons upon whom the estimate is made.

A glance will show that an estimate of 50 % is well within the limit. From these studies we might conclude that at least 50 % of all criminals are mentally defective. Even if a much smaller percentage is defective it is sufficient for our argument that without question one point of attack for the solution of the problem of crime is the problem of feeble-mindedness.

It is easier for us to realize this if we remember how many of the crimes that are committed seem foolish and silly. One steals something that he cannot use and cannot dispose

* Tested by the Binet scale.

of without getting caught. A boy is offended because the teacher will not let him choose what he will study, and therefore he sets fire to the school building. Another kills a man in cold blood in order to get two dollars. Somebody else allows himself to be persuaded to enter a house and pass out stolen goods under circumstances where even slight intelligence would have told him he was sure to be caught. Sometimes the crime itself is not so stupid but the perpetrator acts stupidly afterwards and is caught, where an intelligent person would have escaped. Many of the "unaccountable" crimes, both large and small, are accounted for once it is recognized that the criminal may be mentally defective. Judge and jury are frequently amazed at the *folly* of the defendant — the lack of common sense that he displayed in his act. It has not occurred to us that the folly, the crudity, the dullness, was an indication of an intellectual trait that rendered the victim to a large extent irresponsible.

## ALCOHOLISM

### Intemperance — Drunkenness

For more than a generation the civilized world has been more or less vigorously fighting intemperance and drunkenness. With what result? The answer depends largely upon the temperament of the questioner. If he is optimistic he may claim that much has been accomplished. If he is of the pessimistic nature he will declare that there has been no result. At least we can all agree that the result is far from satisfactory. The drink-bill of the nation increases every year, and faster than the population. Why has so little been accomplished? Largely because the nature of the problem has been imperfectly understood.

There have been enough people who believed that it was a matter of education and will-power to defeat all efforts at any more drastic method of dealing with it. We have lectured to the people, we have preached to them, we have fined them, we

have punished them, we have devoted a disproportionate time in public schools to educating them on the effects of alcohol. A good proportion of our efforts have been wasted. We have not discovered until recently that a comparatively large percentage of people cannot learn; that they have no will-power, they are the simple victims of suggestion; a Gough can induce them to sign the pledge by scores, and to-morrow or next week they are drunk again. They can be preached to and profess conversion, only to be found in the gutter to-morrow. The children can learn to recite the things that they are told about the effects of alcohol, and then go out on the street and into the saloon.

Many of them being feeble-minded have no control over their appetites or over the situation in which they are placed, and given an environment with temptation and suggestion to drink intoxicants, they easily yield.

We have committed the same error here as in many of our other social problems, that of looking only at the end product and reasoning from what we know of ourselves to what has been the probable cause of this condition and consequently how it would best be prevented. We have failed to go deep into the question and investigate what we may call the raw material.

Looking at the problem from the standpoint of mental defectiveness we are confronted at once by the fact that the same lack of intelligence, the same inability to control one's actions must necessarily lead these defectives into alcoholism whenever the environment is suitable. We may say that every feeble-minded person is a potential drunkard. This is only another specialized form of what might be put in a general statement that every feeble-minded person is bound to be the victim of his environment because he has not intelligence and judgment and will-power enough to control that environment.

We have therefore every reason to expect that a goodly percentage of the feeble-minded people will become alcoholic. So much for the *a priori* argument. What are the facts?

As in the case of criminals we are still lacking figures that will give us any accurate idea of the percentage of alcoholics that are feeble-minded. It has long been claimed that alcoholics were mentally weak but it was supposed that this was produced by the alcohol itself; that in the beginning they were all strong minded; that the alcohol has taken away that strength. There are few or no data to prove the truth or falsity of this statement. There are many considerations however that will lead the unprejudiced person to the conviction that the number of persons in whom alcohol has produced a weakness of the will is comparatively small. There are too many people who have gone to the farthest extreme in the abuse of alcohol who nevertheless maintain all their mental vigor when they abstain from the cup. There are no excesses of alcohol to which man has gone, from which some men have not recovered and become thoroly vigorous mentally, even when it has practically destroyed their physical constitution.

The chief source of weakness of the intemperate is in the line of habit. A habit of drinking enslaves a man as much as any other habit but it does not have any effect upon his mental processes that are not involved in the particular habit. Let anything occur to break this habit and he is practically restored to his full strength of mentality. Wherever there is a permanent and incurable weakness of will and lack of intelligence it is highly probable that there never has been a strong will or high intelligence.

This statement may be challenged by some readers but it is borne out not only by the psychology of the case but by observation. One has only to consider the large number of cases where persons who are strongly addicted to alcohol have suddenly reformed and maintained a high degree of integrity and mental strength. Many a man has been so strongly affected by a death in his family that he has suddenly and absolutely changed his habits and become a temperate man. Some have reformed thru

a change of environment; some thru the stimulus given by religious conversion; some because their pride has been aroused.

The following case known to the writer is typical: a man who had reached the lowest level, had become a perfect sot, after an all night's debauch applied to a barkeeper in the morning for another drink; the barkeeper, altho he knew him well, refused him, because he could not pay for it. This so angered the man that he said to himself — "If that is what they think of me, I will never drink another drop." He kept his resolution.

In these cases there is never any history of a weakened mind except along the one line of the habit; these people have their normal intelligence and the effects of their intemperance however much they may appear in their physical condition do not show in the mental. The numerous cases of men who are generally temperate and good business men but occasionally have to go on a spree are examples of the same principle. As soon as they have recovered from their debauch they have their normal intelligence.

The question of whether alcohol causes feeble-mindedness will be discussed at length later on. The present discussion is only intended to call attention to the fact that feeble-mindedness must in the very nature of the case lie at the root of much intemperance, and that to successfully attack this problem we must begin at the beginning and discover what is the ability of each individual, by his natural mental inheritance, to control his own actions.

### PROSTITUTION AND THE WHITE SLAVE TRAFFIC

Perhaps there is no problem looming larger at the present time than prostitution with its attendant horror the so-called white slave traffic.

Much has been made of the condition of the under-paid shop-girl who is compelled to supplement her earnings by immoral acts. Vice commissions have investigated the subject and vari-

ous reports have appeared. There is practically no consensus of opinion as to the cause of this vice, and the emphasis is laid now here, now there. Among the different causes feeble-mindedness has been suggested, but nowhere has it been given the prominence that is due it. No one who understands feeble-mindedness, especially the moron, can expect anything else than that great numbers of these girls will fall into a life of prostitution. The simple fact that they have normal or nearly normal instincts, with no power of control, gives the condition for the result. Some of them seek out that kind of life, others become the easy victims of the cadet, the white slaver or the madame. Even the under-paid shop-girl is in many cases a girl of low intelligence, while not perhaps a moron, yet not very many degrees from it, — a girl who has not been able to learn enough to enable her to earn a larger wage. Many of these under-paid girls seem to be merely ignorant, not mentally defective. On the other hand, where a fair degree of intelligence is present, the girl does not remain ignorant. The world is full of people who have started out with as little capital in the way of education as can be imagined, and yet the something within them has pushed them forward. Their inborn intelligence has enabled them to master the work of a trade and they have steadily forged to the front. So that it may well be contended that feeble-mindedness is indirectly as well as directly the cause of much of the prostitution. And it is these weak-minded, unintelligent girls who make the white slave traffic possible. While it is true that now and then one is forcibly kidnapped and forced into this life under circumstances which no amount of intelligence could have controlled, yet a mere reading of an account often shows that the girl was lacking in intelligence or she could not have been entrapped in the way she was.

As to actual statistics on this subject we have almost none. One very significant record comes from Geneva, Illinois, made by the same Dr. Bridgman whom we have already quoted. She found that of 104 girls in that reformatory, who were com-

mitted for immoral life, 97 % were feeble-minded. This does not by any means indicate that 97 % of prostitutes are feeble-minded, because it is only natural to expect that the feeble-minded ones would be the ones to be caught and sent to an Institution. This figure, nevertheless, gives some idea of the prevalence of feeble-mindedness in this traffic. Many competent judges estimate that 50 % of prostitutes are feeble-minded.

Some day a vice commission or a progressive court will arrest a typical group of prostitutes and test their mentality by approved methods. Then the problem will begin to approach solution. A large majority will be found feeble-minded; a part of the remainder will be of low intelligence tho not what we now call feeble-minded; a few will be sexually abnormal and the rest probably victims of circumstances.[1]

## PAUPERISM

Why is a pauper? We have answered this question in the past in some such way as this: A pauper is a person who will not work sufficiently to earn his living, — he is lazy and prefers

[1] Since the above was written we have received the Report of the Massachusetts "Commission for the Investigation of the White Slave Traffic, So Called." From this Report we learn that what we have predicted has been done, and this Commission has tested the mentality of a group of prostitutes with the following results:

On page 29 we read —

"Of 300 prostitutes 154 or 51 % were feeble-minded. All doubtful cases were recorded as normal. The mental defect of these 154 women was so pronounced and evident as to warrant the legal commitment of each one as a feeble-minded person or as a defective delinquent.

"At the Massachusetts School for the Feeble-minded there are an equal number of women and girl inmates, medically and legally certified as feeble-minded, who are of equal or superior mental capacity."

In our judgment the Commission have been ultraconservative; no doubt wisely so, for their purposes. But we read further — page 30:

"The 135 women designated as normal, as a class were of distinctly inferior intelligence. More time for study of these women, more complete histories of

to live at the expense of someone else. Or, he is a person who has been overtaken by misfortune and has become a pauper because of circumstances over which he had no control. Neither of these definitions covers all the cases.

We will not here contend for what might be considered an extreme view, that people overtaken by misfortune are seldom allowed to become paupers, that humanity is so kind, so philanthropic that it is always willing to help the person who is desirous of helping himself and that the misfortunes of life are overcome by this mutual helpfulness; nor, on the other hand, that any person who seems to be lazy and unwilling to work is by that very fact defective either physically or mentally; yet there is much truth in each of these statements. Very few of the paupers are so, solely because of misfortune. Still we have many reasons for believing that the man who is lazy has something fundamentally wrong with his mind or his body. We know now of a large group of people who were thot to be good-

their life in the community and opportunity for more elaborate psychological tests might verify the belief of the examiners that many of them also were feeble-minded or insane.

The mental age of the 135 women rated as normal, as measured by the Binet Scale, was as follows:

17 had the mentality of a 12-year-old child.
71 had the mentality of an 11-year-old child.
32 had the mentality of a 10-year-old child.
4 had the mentality of a 9-year-old child.
11 were not tested.

Quoting further:

"Some of the women seen at the Detention House were so under the influence of drugs or alcohol as to make it impossible to study their mental condition. Others at the Detention House and in the prisons had used alcohol to excess for years, and in the time available, it was impossible to differentiate between alcoholic deterioration and mental defect. These drunken, alcoholic, and drug-stupefied women were all recorded as normal.

"Of the 135 women rated as normal, only a few ever read a newspaper or book, or had any real knowledge of current events, or could converse intelligently upon any but the most trivial subjects. *Not more than 6 of the entire number seemed to have really good minds.*" (Italics ours.)

for-nothing, shiftless, lazy people, people who might earn their living if they would. We now know that the condition has been due to the hookworm disease.

The lazy boy is a diseased boy or a defective boy. It is not natural for a child to be lazy. Fundamentally the child is active and industrious. If he seems to be lazy, there is a cause for it and this cause must be sought out and removed. The same is probably true in a large proportion of the adult cases.

Let us now look at this matter from the standpoint of feeble-mindedness.

Any person who is feeble-minded, who, according to the definition, is unable to compete with his fellows in the struggle for existence, must, other things being equal, become a pauper. He is incapable of earning his own living; therefore he must live at the expense of someone else. He may take the matter somewhat into his own hands and seize upon means of a living, in which case he becomes a criminal; or he may quietly and passively submit to the conditions, and then he becomes a pauper and if he does not die of starvation it is because society takes care of him. But we are not confined to the *a priori* argument.

Investigation of our almshouses shows that a considerable proportion of the inmates are mentally defective. While we have no adequate statistics on this line, it is highly probable that at least 50% of the inmates of our almshouses are feeble-minded. Because of mental incapacity they have failed of earning enough for their own support. Nor was this a condition of later life only nor of hard times. They were defective children. Their parents and grandparents were defective — some of them. They should have been looked after in these earlier stages of the problem. They are where they are thru no fault of their own but because their burdens — those of making a living — were too heavy for them. Society should have protected them.

### NE'ER-DO-WELLS

Every community has its quota of people, who, because of their failure to act in harmony with those who are definitely working for the welfare of society, may perhaps be designated as undesirable citizens or ne'er-do-wells; while not paupers, they often have to receive assistance from others; while not criminal, prostitute or drunkard, are still shiftless, incompetent, unsatisfactory and undesirable members of the community. In the past the careers of such people have been accounted for by declaring that they were wilful, wayward or ignorant.

In view of the proportions to which feeble-mindedness has grown, it certainly is not unwise to ask the question — may not some of these people be feeble-minded? Is it not possible that they have not learned better manners and habits because they *could* not? An intelligent person learns to adapt himself to his surroundings even tho no one tells him what he ought to do. Many times these people are the laughing stock of their community because of their foolish actions, or they are pitied because of their lack of judgment. But whatever the feeling toward them, it has always been assumed that they could be different if they would. The time has come when we must ask in regard to such cases — is it not possible that they are incapable of doing differently? It is certainly true that such people often act just as do feeble-minded people of the moron type. It seems, therefore, highly probable that a goodly proportion of these ne'er-do-wells are of such relatively low mental level that they cannot adapt themselves to their environment as the majority do.

### TRUANTS

The problem of truancy is also one in which feeble-mindedness is involved. Many a school child becomes a truant because he *cannot* succeed in school. We need careful tests of

the mentality of truants. One such study shows upwards of 80 % of them feeble-minded.

It may be asked: if feeble-mindedness is such a potent factor in these great social problems, why is it that the fact has not been discovered sooner? The answer is that feeble-mindedness itself in its higher form has not been understood. Even yet "feeble-mindedness" in the popular mind is synonymous with idiocy or imbecility — those lower grades of mental defect which are often manifest in the faces of the individuals. Everyone recognizes the idiot or the imbecile, the foolish boy or the silly girl; but if the person is not one of these he is considered to be normal and responsible. Not until we began to test intelligence and had secured standards showing that to be "able to manage his affairs with ordinary prudence" a person must have intelligence beyond that of a 12 year old child, did we realize the type that we now call the moron, the high grade defective.

It is this discovery that has opened our eyes to the actual condition and enabled us to formulate working hypotheses which have proved marvelously fruitful. It is proper here to pay tribute to the mind that gave us this key to the situation. More than to anyone else we owe to the untiring efforts and the high intelligence of Alfred Binet the method for the solution of this part of the problem.

Having recognized this high grade type of feeble-mindedness we see that there are four lines along which investigation must proceed — four problems to be solved.

First: there is the social problem to which we have already alluded, the question of the place that the feeble-minded fill in the social life of to-day: their relation to crime, pauperism, intemperance, the social evil, incompetency, and disease.

Second: the psychological problem. What sort of mental processes have these feeble-minded people? What is the condition, for instance, of their memory, attention, sensation, perception, emotion, will and judgment?

Third: the pedagogical problem. What can they be trained to do? How shall we train, educate and discipline them? What moral training do they get or can they take?

Fourth: the biological problem. What is the cause of mental defectiveness? What is the physical basis of it, and what methods of prevention can be suggested?

Since September 1906 The Vineland Training School thru its Department of Research has been studying this problem along the above lines. The work is still going on; the psychological and pedagogical problems are still under investigation. While much has been found out and many suggestions might be made, for their final statement these problems must await further study.

The social and biological problems are the subject of this book. While neither of these is completed, yet so many facts have been collected that it is already possible to draw some significant conclusions.

# CHAPTER II

## RELIABILITY OF THE DATA

Any work presenting facts so new and startling as those here contained must be critically examined as to the reliability of the data. Especially is this true when the data are not only new, but if true must become the basis for new scientific theories and changed social action. Our data show the large element of heredity in feeble-mindedness and on the basis of this fact it is proposed to change our treatment of delinquents. Furthermore our facts are to be examined in relation to the Mendelian hypothesis. Both sociologist and biologist will at once ask — is it sure that we have reliable facts, or has someone been careless in collecting the information, relied too much upon hearsay, or drawn conclusions too hastily?

In considering this matter it must be recognized at the outset that our data are far from being as satisfactory as we could wish. There are several reasons for this. The data are incomplete. There are always some members of the family concerning whom we cannot get reliable information. Sometimes nothing is known about the father, occasionally the mother is lost; sometimes even a brother or a sister is missing, more often it is the grandparents, and more often still the cousins or the second-cousins. Just when it would be possible to draw valuable conclusions to confirm or overthrow some hypothesis the necessary data are missing from the family records. This difficulty can to a greater or less extent be overcome by the large number of cases, where certainly some will be found fairly complete, or where one case supplies what another lacks.

Again, the data are unsatisfactory on account of the fallibility of human judgment. The distinction between the feeble-minded and the normal person is not always easy to make. Indeed we hold that there is no sharp and fast line which clearly divides the two groups; as a result we have a large number of borderline cases. We cannot pretend that we have always decided these cases aright. Many cases that have been left undetermined could doubtless have been easily decided had we been able to get a clear statement from persons who knew the individual in question. In solving these cases we have followed the rule of giving the benefit of the doubt to the individual; that is to say, we have never charted a person as feeble-minded unless we had ample evidence in support of that decision. Cases where we were not satisfied of this, we have dealt with in different ways. Where there is an entire lack of information we have left the squares or circles blank. If we have been able to discuss the question, presenting the facts *pro* and *con*, we have used the question mark with the weight on the normal or the feeble-minded side as circumstances seemed to warrant. So that "F?" means that we have deliberated over the matter and on the whole it seems highly probable tho questionable that the person is feeble-minded. In like manner "N?" means that after mature deliberation we have called the person normal, altho this may be questioned. In consequence of our having pursued this policy all charts are *better than the facts*. If we had complete information or perfect judgment our charts would be blacker than they are.

### MANNER OF OBTAINING THE DATA

Another question in considering the reliability of the data is: How has it been collected? Are the methods followed and the means adopted for securing the facts sufficiently safe-guarded to insure results that are reasonably reliable? We must devote some time to a consideration of this point because it is

fundamental to the value of the material contained in this book.

Early in the work of this laboratory we turned our attention to the question of the causes of feeble-mindedness. An examination of the admission blanks of the Institution showed that they did not furnish the necessary data. Often the questions had been misunderstood, sometimes unanswered thru sheer ignorance; in other cases, it is to be feared, answered in such a way as was believed would insure the child's being admitted. In an effort to remedy these defects a new set of questions, called for convenience an "after admission blank," was sent to the parents with the special appeal for them to coöperate with us in our efforts to benefit their child and thru him other children, by carefully answering the questions. The set of questions was made out in as simple language as possible, going into the desired matter in the necessary detail. Another blank somewhat similar, with medical terms substituted for the more common phraseology, but in many places asking the same questions, was sent to the family physician. It was hoped that from these two questionnaires checking each other, information would be elicited which would enable us to construct a chart of the family which would be of distinct value. This was carried out in the fall and winter of 1908–9. As the returns from these questionnaires came in, charts were prepared.

Two facts were at once evident. The results were very satisfactory in many cases, and showed that parents were eager to coöperate with us. But the returns showed also that the results would inevitably be limited by the intelligence and education of the persons filling the blank, and that this would so often be a serious limitation that we could never get all that we desired by this method.

The next plan evolved to supply this defect was that of employing field workers. We felt sure that a person of the right qualifications could secure the desired information.

We realized keenly the importance of securing the right person. The qualities that we considered necessary were: a pleasing manner and address such as inspire confidence; a deep and true interest in humanity which would enable the worker to have a genuine sympathy with the people whom she would visit; a high degree of intelligence which would enable her to comprehend the problem of the feeble-minded, to learn readily the types and characteristics of the children, and to see the bearing upon the central problem involved of various facts that might come to hand; a general or special training such as to render her accurate and efficient in reporting and recording results. Good health and resourcefulness were of course included. After much inquiry and search we secured a woman whom we believed would be satisfactory. On the eighth of November, 1909, Miss Elizabeth S. Kite came to the Training School to begin special training for the work. She devoted herself for a number of weeks to the study of the problem of feeble-mindedness as it could be seen here. She read and observed, asked questions, interviewed children, learned their mentality and their peculiarities until she had a good idea, not only of feeble-minded children but of the different grades and types. When this was done she made a brief list of children with whose histories she would begin.

In the preparation of the cases to be investigated the field worker made the acquaintance of each child, prepared a sheet containing his picture and the facts about him, so as to avoid any possibility of confusion when she came later to talk to the parents. On these sheets were also all the addresses that the Institution possessed of members of the family. Her instructions as she went out were in the main those that were later embodied in Bulletin No. 2 of the Eugenics Record Office. She carried no questionnaire or blank to be filled out, but rather was given general directions as to what to inquire for. The reason for this is that a questionnaire too often elicits a definite answer, when, as matter

of fact, there is no definite answer to be given. We deemed it wiser to explain to the people as well as possible the purpose we had in view, and then allow them to talk, directing their conversation along certain special lines, such as to bring out the facts in regard to any members of the family who might be feeble-minded, alcoholic, insane, or dependent upon charity, etc. or on the other hand who might be free from any or all of these.

We may note here that later in the year provision was made for a second field worker, and early in the following year for a third. Miss Jane Griffiths and Miss Maude Moore were secured.

The field workers were instructed to record so far as possible the exact words of their informant, not of course the whole conversation, but the salient features. They were to do this rather than to give us their interpretation of what they heard. They of course also gave us their impressions but these were recorded *as impressions*. Having the original words of their informers it would be possible for any one at any time to draw his own conclusions, whereas, if we had only the field worker's interpretation we could never be certain upon what that interpretation was based. Reports were sent in to the laboratory every few days, whenever a case was finished, or if a long case, at least every week. We felt that it was neither economical nor desirable to require the field workers to make a daily report or in any way to encumber them with clerical work. They made rough family history charts in the field and sent them in with their reports. Later it was found desirable for them to make these charts on a large scale, that is, without crowding individual symbols, leaving room to record on the chart beside each symbol facts in regard to the individual represented by that symbol. This is a great convenience in referring to the chart and the data.

The field workers were given instruction on the nature of evidence so that they would recognize the kind of information that needed corroboration and the kind that was practically safe and

reliable upon the testimony of the single informer. They were instructed to get the necessary corroboration in all cases as far as possible. In the case of contradictory statements or opinions, all statements were to be recorded and every effort made to decide between the conflicting evidence.

The field worker went armed with a card of introduction from the Superintendent of the Institution. This means much. The admissions to this Institution are all voluntary. Parents ask for the privilege of sending their children here. When at last they are admitted, the parents are happy. They receive answers to all the letters they write inquiring about their children. They receive periodical reports on progress. They are allowed to come to see the child at any time desired, and altho they are urged to come on a particular day of the week, they are not refused on other days. Whenever they come they receive a friendly greeting and cheerful word from the Superintendent. Their attitude toward the Superintendent, the Institution and its work is one characterized by a feeling of happiness and confidence. In consequence of this, when the field worker approaches the family, saying, "I have come from Vineland, from Superintendent Johnstone, I bring you a message from your Willie or your Katie," she is received with the most cordial welcome. And when she sits down with them and gradually discloses the fact that we are studying Willie's case and that we want information along such and such lines, they gladly give every aid in their power. It may well be remembered in this connection, that the majority of these people are of the type that like to talk about their own affairs.

The results have proved eminently satisfactory. Not that we have obtained all that we desired; not that we have scientifically accurate information on all the phases of the problem that would be valuable to us; but we have secured, in a large number of cases, thoroly corroborated facts which show us many conditions little understood previously.

As a rule, our workers have easily been able to decide the mentality of the persons they saw. In some cases, indeed, this was not so easy and only after much observation and questioning of neighbors and friends as to the conduct and life of these persons was it possible to come to a reasonably satisfactory conclusion. In many cases it has been impossible to decide even after all our care; and these cases are therefore left undetermined.

In regard to the persons not seen, and especially those of earlier generations who are no longer living, the task at first sight seems more difficult. Some even assume that it is impossible to determine the mentality of such cases unless they were commonly recognized idiots or imbeciles. That such is not the fact however will become evident from a little thotful consideration. It must be remembered that the field worker goes out with a background of knowledge of four hundred feeble-minded boys and girls, men and women, of all grades of intelligence, and a great variety of temperaments and hereditary influences. With this background it is possible to project any individual into a known group and decide that he is or is not like someone in the group. This of course must not be done, and is not done, by any superficial resemblance but on the basis of many fundamental characteristics.

The idea that it is impossible to determine the mentality of a person who is three or four generations back of the present is partly an ill-considered one and partly the result of erroneous logic. One says — "I don't know my own grandparents, and as for my great-grandparents I do not even know their names." And the implied argument is "If a person as intelligent as I am, does not know his grandparents how can these ignorant defectives know theirs." The argument is fallacious thruout. To begin with, family ties are often much closer with these defectives than with more intelligent people who are often too busy to keep up these relationships; the defectives are more apt to remain for

generations in the same community, while the intelligent migrate and so leave their ancestors. This was well shown in *The Kallikak Family* where the members of the bad side are practically all to be found within a narrow area around the ancestral home, while the good side are scattered over the United States and Canada.

Again, the fact that I do not know my grandparents does not prove that no one now living knew them. As a matter of fact there are numerous people now living who knew them well.

Further, three generations back is easy and six is not impossible. We labor under a fallacy in regard to this point. We are apt to conclude that because a man rarely remembers *his* great-grandparent, no one can have known a person four generations back. It is a surprise to us to be told that there are persons now living who remember heroes of the American Revolution! John Doe enlisted in the Continental army in 1775 at the age of twenty. He died in 1845 at the age of ninety. Richard Roe was twelve years old at that time and vividly remembers hearing the old man Doe tell of the exciting experiences of '76. Richard Roe is eighty-one years old now. That is a rare occurrence? Certainly. And we have been able to determine that a person in the sixth generation back was feeble-minded in only one family out of 327 — the Kallikak family. For the fifth generation we have made determinations in only four cases and even these are not involved in our conclusions.

The ease with which it is sometimes possible to get satisfactory evidence on the fifth generation is illustrated in *The Kallikak Family*.

The field worker accosts an old farmer — "Do you remember an old man, Martin Kallikak (Jr.), who lived on the mountain-edge yonder?" "Do I? Well, I guess! Nobody'd forget him. Simple, not quite right here (tapping his head) but inoffensive and kind. All the family was that. Old Moll, simple

as she was, would do anything for a neighbor. She finally died —burned to death in the chimney corner. She had come in drunk and sat down there. Whether she fell over in a fit or her clothes caught fire, nobody knows. She was burned to a crisp when they found her. That was the worst of them, they would drink. Poverty was their best friend in this respect, or they would have been drunk all the time. Old Martin could never stop as long as he had a drop. Many's the time he's rolled off of Billy Parson's porch. Billy always had a barrel of cider handy. He'd just chuckle to see old Martin drink and drink until finally he'd lose his balance and over he'd go!"[1]

Is there any doubt that Martin was feeble-minded?

Physicians conclude upon evidence infinitely weaker than ours that Napoleon, Julius Cæsar and St. Paul were epileptic. Historians reconstruct out of a few charred posts, straw, grain, etc., the habits, mode of life and almost the mental level of the Swiss Lake Dwellers. Surely the person who rejects our data on the basis that such things cannot be determined, would discard a large part of the world's history as now written.

It is not difficult for one versed in the subject to tell whether or not a man was feeble-minded even tho he lived a hundred years ago, providing he made enough impression upon his time for traditions of him to have come down. As a matter of fact it is this latter proviso which cuts out most of the people back of the third generation. It is very rare that we find feeble-minded persons in the fourth generation unless they were so markedly feeble-minded that it has been a tradition in the family or among the neighbors all these years. This has sometimes happened, as will be seen from the charts. In such cases of tradition there is no doubt about the accuracy of the determination. Any person living or dead, who was so abnormal that neighbors or friends or descendants always spoke of him as "not quite right" is certain to have been decidedly defective.

[1] See *Kallikak Family*, page 83, Macmillan, 1912.

It is not in this group that the liability of error enters, but rather in the one that we call moron, the individual of whom the people say, "Oh, yes! he was all right, but he was never able to get along." Then the field worker proceeds to ask many careful questions from which she satisfies herself that the reason he was not able to get along was because of lack of intelligence. In these cases it is possible to err. In all such cases we have insistently maintained that we must give the benefit of the doubt to the individual's intelligence, and we must not mark him feeble-minded unless the evidence is clear.

From this policy which we have constantly maintained, it is almost certain that we have left a great many individuals undetermined who were really feeble-minded, possibly we have even marked some normal who were feeble-minded; so that as a consequence our charts are, as already stated, ***better than the facts.***

The reader will not forget that our problem is a comparatively easy one, the determining of the mentality of the various persons, that is, whether normal or feeble-minded.

When it comes to a question of determining insanity, to say nothing of the ***kind*** of insanity, or even epilepsy except the most obvious cases, or the diseases from which these persons suffered, it is an entirely different matter, and we make no pretension that our records here are absolutely accurate. We quote them as they were reported to us for whatever they may be worth. We have exercised every possible care and they probably have considerable value, but how much, it would be impossible for anyone to determine.

We have not hesitated to test and check up the work of our field workers. This has been done in different ways. One field worker has taken a case that another field worker had worked up and she has brot in an entirely independent report. In some cases the field worker has brot in reports on families that are known to others in the Institution, such as Superintendent Johnstone, or perhaps a matron or a teacher. At times the

writer himself has gone with a field worker after her report was in and interviewed the various persons on her chart and come to his own decision as to whether she had rightly or wrongly marked them.

Good results have been secured by sending field workers out to go over some of their own cases to discover whether a second interview (especially after the lapse of some months and the acquiring of more experience) would result in changing the marking of any individuals.

The result of all of these checkings is to establish beyond question the fact that our records are conservative. The changes that have been made have been mostly changes from "undetermined" to "feeble-minded"; from "normal" to "questionable."

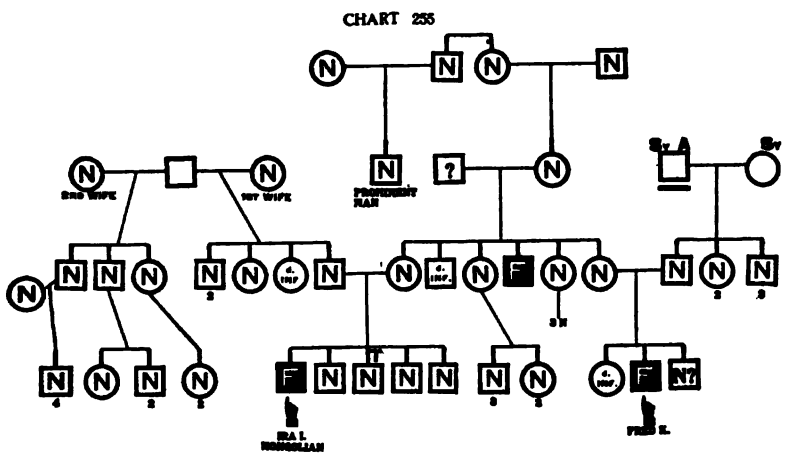


Cases 255 and 284 are on one chart.[1] The revised chart (here reproduced) compared with the original, shows that the result of a second examination of the family has made the field worker question several of the persons formerly marked normal, and change one that was marked "questionably normal" to "definitely feeble-minded." This last change has a further

[1] For explanation of charts see page 48.

interest for us; this boy a younger brother of Fred K. was examined by the writer and found to be only a little more than a year

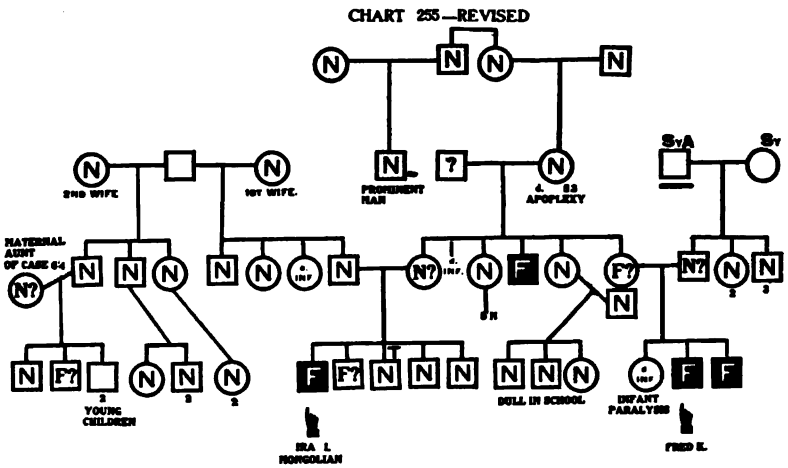


backward and consequently was not declared feeble-minded. That was three years ago. Examined again recently he shows precisely the same mentality as before, which now makes him

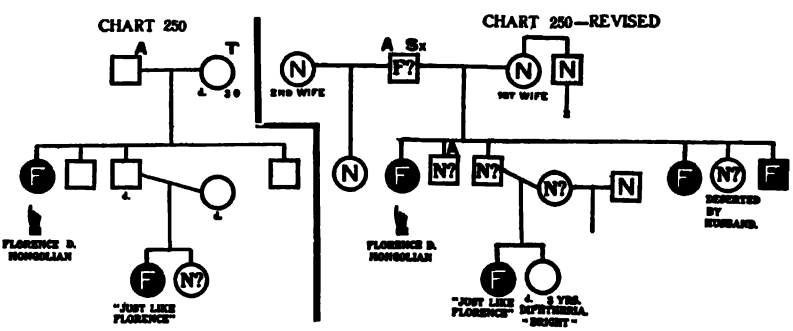


more than three years backward and other signs clearly show that he is really mentally defective.

We thus have an example of what we have found in a few other cases and suspected in many, that we often get these children

soon after they have begun to slow down in their development. At the moment they do not show more than a little backwardness, but as time goes on that backwardness becomes so great that it is definitely feeble-mindedness.

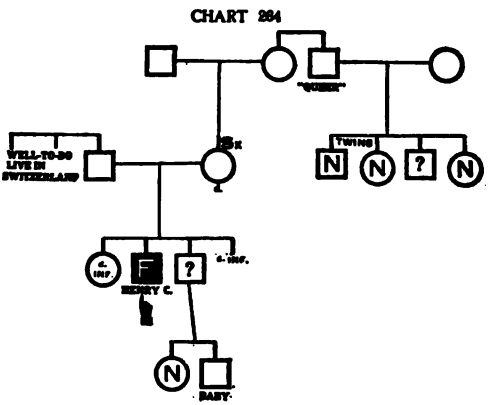


Case 250 is a Mongolian type. Further study of this case has enabled us to add a number of individuals, some of them normal, and to fill in the undetermined ones, at least to the extent of marking them normal or questionably normal. It has also added two feeble-minded.

Case 264 is a case supposed to have been caused by scarlet fever. The earlier account of this case suggests that since so many are undetermined it would be possible that this might be an hereditary case. Our second study, while not entirely removing that doubt, has added some normal people with the effect of making it a little less probably an hereditary case, and therefore more probable that the assigned cause, scarlet fever, may be correct.

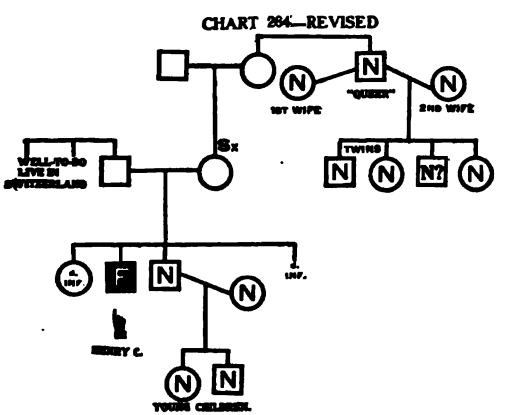


Case 177 being re-investigated shows no significant change.

It is noticeable that Byron's sister at the time of the first investigation had three children, two of whom were too

CHART 177

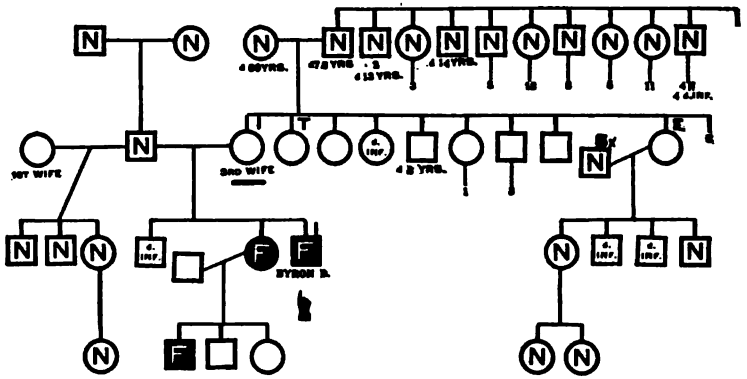

young to be determined. She now has five children and the two undetermined ones are now old enough so that it is apparent that they are normal.

CHART 177—REVISED

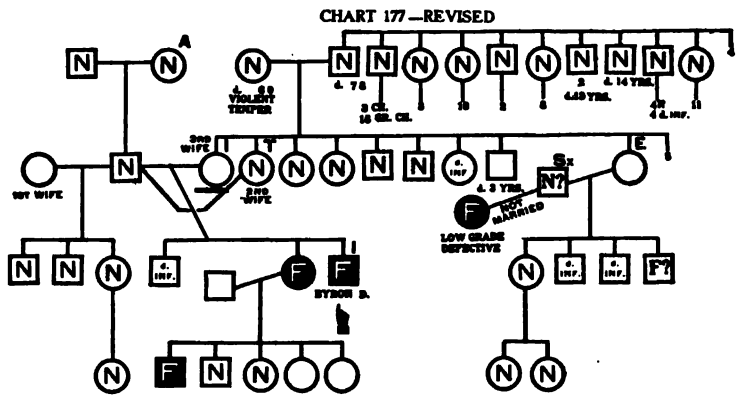

Case 170 was classified as probably hereditary; further study has enabled us to mark a number of individuals on the mother's side as normal who were before undetermined, but it has also given us Imlay's father as questionably normal. On the whole,

perhaps the probability of hereditary feeble-mindedness is slightly increased, for while the increase in the number of normals on the maternal side makes it a little less likely that there was feeble-

CHART 170

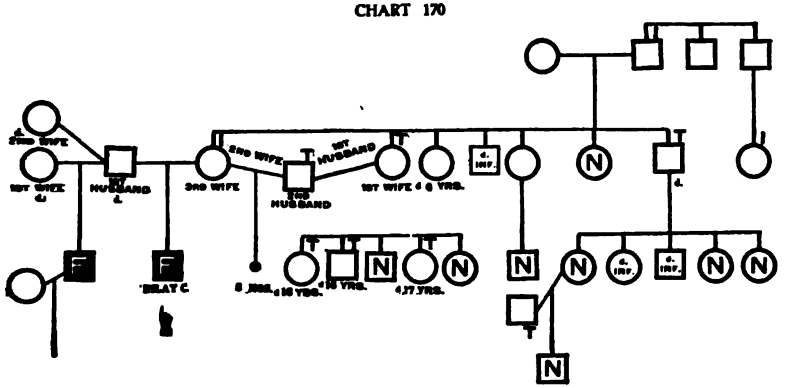

mindedness in that family, on the other hand the questioning of the father's normality with the addition of his parents, the father of whom was entirely unknown to his wife's family, makes it look suspicious.

CHART 170—REVISED

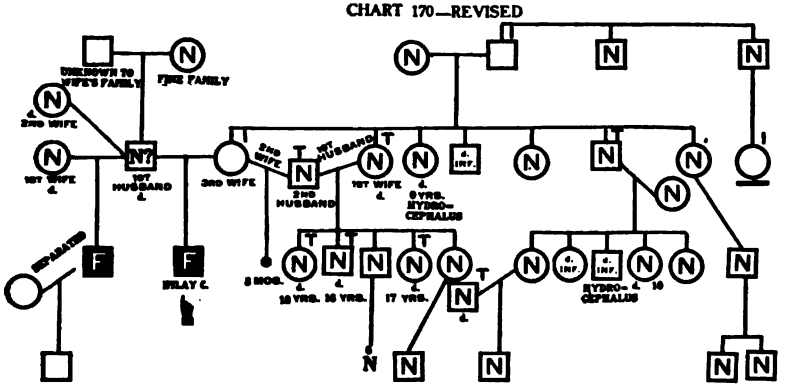

Case 189, which was recorded as probably hereditary, has been extended very much as will be seen by comparing with the original chart. The probability of this being an hereditary case

seems to be a little reduced and yet by no means entirely removed. There are some undetermined on the maternal side who may have been defective; while on the father's side there re-

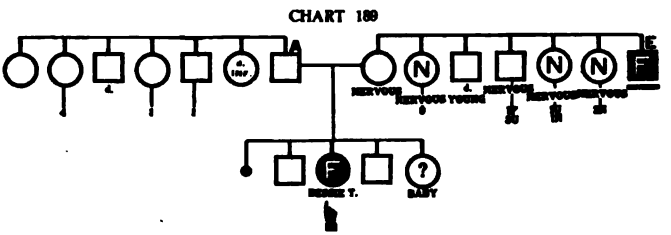


mains a good degree of probability that there was defect. The ugly and heartless disposition may be evidence of this.

In Case 97 we have been able to confirm the previous findings and to add several details, including five more defectives.

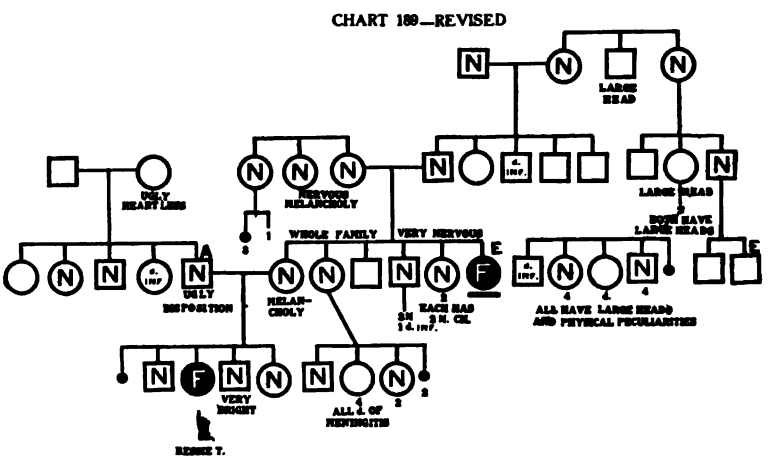


A comparison of the original and revised charts in Case 1 shows that the father of Gertrude upon further examination has been found to be defective.. The maternal grandmother is normal and two of the persons marked undetermined are now considered questionably normal.

It will be seen that all of these changes are in the direction of making the histories worse rather than better. This is natural because we were all more conservative in the beginning and

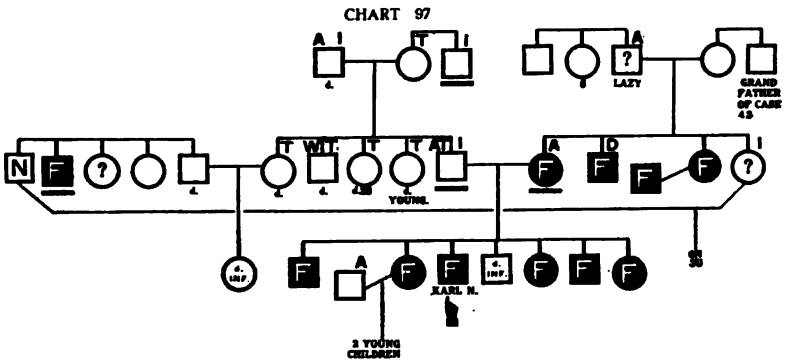


the field workers were not so familiar with feeble-mindedness. They did not recognize the finer symptoms and were not willing to call anybody feeble-minded who did not have some of the

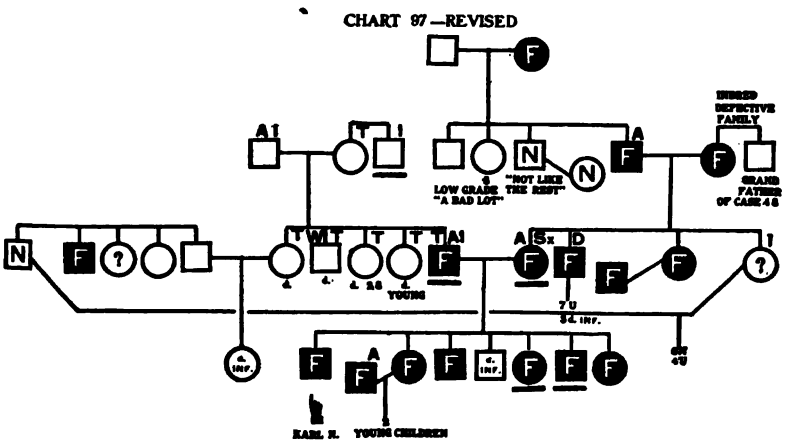


larger marks. As they came to have greater familiarity with persons known to be feeble-minded they began to recognize the more obscure symptoms and were able to see somewhat beneath

the surface. They also learned how to get information under difficult circumstances where in their earlier experience they were baffled.

In a field like this one must not look for mathematical accuracy, nor in the study of the human mind, either normal or ab-

CHART 1

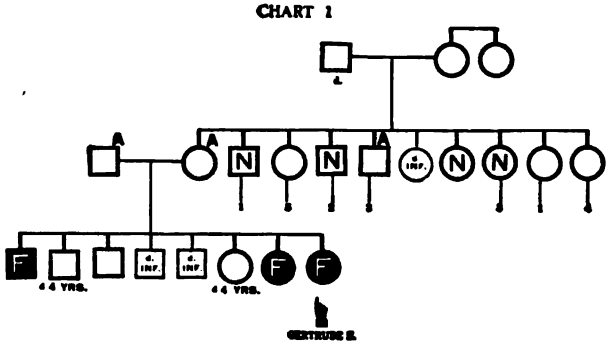


normal, can the student wait for certainty before formulating his theories. The physician who waited until the facts on which he bases his diagnosis were absolutely proved would often

CHART 1—REVISED

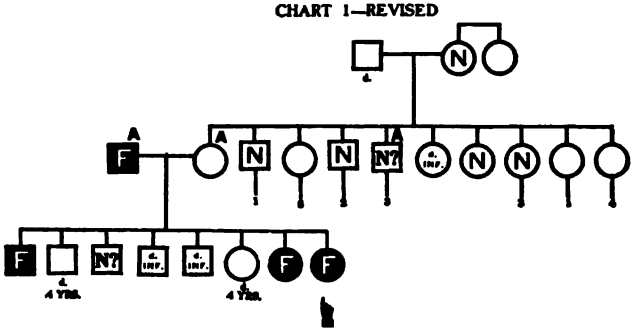


wait until the patient was dead. It is all a matter of probability. It is true that the probability may be made so high in some cases that it amounts to what we call practical certainty.

In all of the material presented in this book we have aimed at

that high degree of probability so that we can say of every family history, while it may be very incomplete, yet as far as it goes it is true. Whatever conclusions can be deduced from the facts here presented are practically sure, and one can go with some degree of probability much farther even than we have gone.

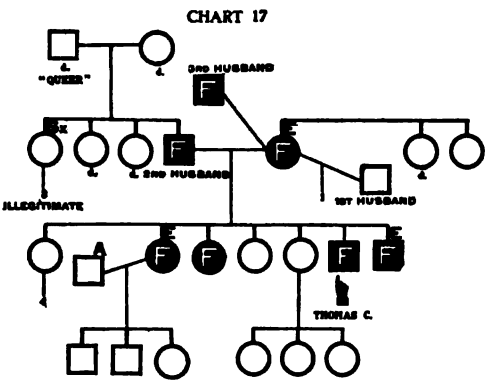


Perhaps the most convincing evidence on this matter may be the case of Thomas C., Case 17.

This case was a very difficult one to follow out, and after many delays and much trouble in getting at the family, the field worker felt that she had given all the time that she ought to devote to one family

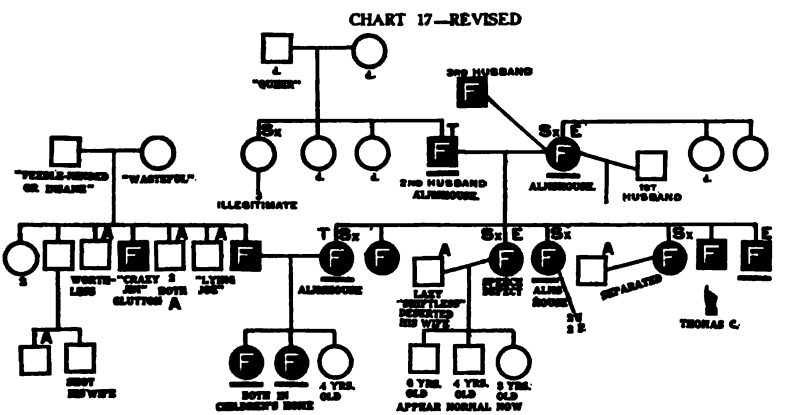


and consequently sent in her report. The result is shown in the upper chart.

Recently Miss Florence Givens Smith, field worker for the State

Charities Aid Association, wrote us that in the course of her investigation she had studied a family, one member of which was at Vineland, and she would be glad to give us what she had found. We of course accepted this generous offer with the result that from the data thus furnished we were able to make the revised chart. The difference in the two charts is striking and confirms what was said above, namely, that when the facts are known the charts become blacker than we have usually made them.

Another point is well brot out here, in regard to the question of applying to later charts, principles or laws that have been determined thru earlier study. For example: it is perfectly clear that if both parents are feeble-minded all of the children are feeble-minded. This being true, we had a right to mark all of the children on our first chart in this case feeble-minded, since both parents are in this condition. But we have never done this. The markings that we have given are invariably those which came from the objective evidence, and not from any theoretical consideration. Só that in this case the work of Miss Smith on this family simply fills in what the theory would call for. But perhaps someone a little more skeptical would wish to ask, "What evidence have you that this second field worker has not had merely a little different standard, and so has marked people feeble-minded where your first field worker marked them "undetermined"? To answer this question I give extracts from Miss Smith's report. I make these somewhat extensive both because they are so convincing and also because it shows well the social side of this type of family.

" The sources for the following information are: records of the Institution for Epileptics, Almshouse records, Board of Children's Guardians, Overseer of the Poor, and eight intelligent and responsible men and women.

*History of Mabel, Annie, and Mary Corner: these are nieces of Thomas C.*

*Mabel* the oldest of the fraternity was born at —— about 1905. She was committed to the Children's Home in January

1912, was returned to her father for a time but recommitted July 2, 1912. Is considered feeble-minded. Her teacher says that she is mild and obedient; is poor in school work but makes some progress; is fair in hand-work.

*Annie Corner*, born January 8, 1906, was committed to the Children's Home in January 1912; was returned to her father and recommitted in July 1912. She is defective. Her teacher says that she is of a different type from her sister Mabel. She is quick in taking directions, but stubborn. Makes progress more rapidly than Mabel.

*Mary Corner* was born in —— about 1909. She is not attending school and it is as yet too early to decide as to her mentality.

*The Father, Will Corner — Brother-in-law of Thomas C:*

*Will Corner* was born at —— but has lived for some years past in the neighborhood of ——. He drinks but could not in any sense be called alcoholic. He is not inclined to work unless forced to do so by immediate necessity; never works regularly or steadily, only by the day or week, usually the former. Is fond of fishing and trapping. He is rather unusually large, strong and able bodied. Wears his hair long and has a most unkempt appearance. Is boy-like in his lack of responsibility; good-natured, and unreliable. When in town is the butt of jokes at the corner grocery. At present is living with his former wife's aunt who receives a pension and assists in supporting them both. Corner's first wife came from ——. She was feeble-minded. Is said to have died from going out of doors barefooted soon after a child was born. By her, Corner had one child. After her death, while working in the neighborhood of ——, he met and eloped with Fanny C. (sister of Thomas C.) who became his second wife, taking her to —— to be married. During their married life they lived in —— and ——. Received charity from private sources.

Will Corner had a brother Ed who was a marble cutter and lived in ——. It is thought that he moved to —— several years ago. He is said to drink heavily. Another brother known as "Lying Joe" was a steady drinker. Another brother, James, was known as "Crazy Jim" and was an imbecile. He did odd jobs in return for food and tobacco and was often imposed upon on account of his lack of intelligence. Miss —— says that he was extremely gluttonous and that she remembers as a child seeing plates of food heaped up for him. One time when there was a

wedding in the family they gave Jim as much as they thought he could eat in the kitchen and then sent him home with a basket to his mother. On the road he stopped to eat more, and was later found by the side of the road in great agony from cramps. He was physically strong and was a good worker when put at a simple task, but was entirely unable to plan work. He was found dead in a barn. Cause of death was thought to have been heart trouble. A brother, Paul, is said to have been a worthless drunkard. A sister, Jennie, is remembered to have been slow in school. Another sister, Mamie, was born about 1842 and died in 1906 of general debility. During the latter part of her life she had a rupture but continued to work out by the day. She is said to have been a fairly good housekeeper. A brother, George, is said to have been a man of industry and good habits, and to have saved some money. His two sons are said to have turned out badly, one is reported as an habitual drunkard, and the other is said to have gotten in trouble for shooting his wife. Dan, another brother, was born in 1840. He is illiterate and decidedly alcoholic.

*The Mother.*

*Millie C.* (sister of Thomas C.) was born in 1881. When a small child she was sent to the County Almshouse with her parents, her sisters, Carrie and Violet, and her brothers, Thomas and Henry. At about ten years of age she was taken from the almshouse and remained in a private home until she was sixteen years of age when she ran away with Will Corner and married him. Mrs. —— says that she was decidedly defective, was slow to learn in school, and was incompetent in housework. If left alone she would not finish a task. Her facial expression indicated mental defect and she sometimes drooled at the mouth. When her first baby was born she was still a girl in short dresses. She was entirely incapable of managing her household, and her children were badly neglected. In manner she was quiet, peaceable and dull. She could read and write a little. She died of tuberculosis in 1910, when 29 years of age.

*Thomas C.'s Brothers and Sisters.*

*May C.* was born in 1872. When a small child, was in the Almshouse with her parents, two brothers and a sister. Twice was taken from the almshouse by Mrs. ——. The last time Mrs. —— took her, she had a small infant. After staying for

eight or nine months she deserted the baby and ran away with a half-witted fellow named Smalley, and came back after several weeks saying that she had married him. For several years they have lived in ——, have drunk, quarreled and often been in Police Court. May's reputation for immorality is well known. She has had four children. The last one which is very dark is thought to belong to one of the Italians who frequented the house. The family were ordered to leave town in the fall of 1912, and moved to ——. Two of the children attend school and are considered feeble-minded. Smalley is guilty of having relations with his wife's oldest child. In speaking of May's mentality, Mrs. —— says that she is not bright, is childlike, does not consider what the results of her actions will be; is quarrelsome and immoral. She, her husband, and children have the reputation of stealing. (Smalley belongs to a degenerate family well known in the neighborhood.)

*Mazie C.* was born in 1874. When about 14 years of age she went to live with Mrs. —— and remained with her for four years, when she went to her aunt. She married a man who drank, but who was superior to herself, but she does not live with him. Has lived with various men. At the time of the investigation was living with a man named Joe Corner. Has been caring for her sister's children since her death. Is a poor housekeeper, never stays long in one place. Has a defect of speech and is undoubtedly feeble-minded.

*Nell C.* was born in 1876. She is said to have been brought up on Warwick mountain. Her first child Charlie, born November 2, 1906, is said by her family to belong to a son of B—— B——.

She then married a foreigner and the family claim that he deserted her after having two children by her. After that she lived with her mother. She died at child birth. This last child, which was still-born, was said to be by her mother's consort. Her children, who are thought to be by the foreigner, are Sam, born in 1908, and Mag, born 1909.

*Nancy C.* was born at ——. She, with several other members of her family, was sent to the Almshouse when a child of seven. By poor officials she was placed in the family of Mr. —— but was returned because she was considered feeble-minded. On July 12 she was committed to the care of the State Board of Children's Guardians and was placed out by them. She became

of age in 1912, at which time she was living with a Mrs. ——. She was visited by the research worker from Vineland who considered her high grade feeble-minded. She said that she expected to marry a man whom Mr. —— had picked out for her. She had not seen him yet but was delighted at the prospect. Is fond of dress and fixing up her hair.

*Thomas C.* was born in 1892. As a baby his mother says that he was well, but when about ten years old began having "fits." He was placed out by the State Board of Children's Guardians but was found to be feeble-minded and was transferred to The Training School at Vineland in 1903.

*Vernon C.* was in the County Almshouse with his parents in 1897, at which time he was recorded as being three years old. In 1901 he was committed to the care of the State Board of Children's Guardians but was found to be epileptic and was committed to Skillman Village in 1907. He ran away from Skillman and has not been returned. The records show that he has had no convulsions since 1899. He had a pronounced defect of speech and stuttered badly. Was considered a fair patient and played the trombone in the band. His mother says that he was well as a baby but that he began having "fits" when five or six years old. (There is probably another sister.)

*The Father-in-law of Thomas C.'s Sister Millie.*

*Milton Corner* was bound out as a boy to Gov. ——. He had little schooling and was illiterate. The Governor's family do not remember much that would throw light upon his mentality. The family were always wretchedly poor, always lived from hand to mouth, and none of them were to be depended upon. They always thought that Milton would have gotten along better if he had not had such an extravagant wife. They lived for many years in a little log cabin near the station. His son-in-law says that from the time he first knew him, beginning when Milton was 40 years of age, his mind seemed to be affected. He would sit by the stove for hours at a time and would not notice anything, often could not be persuaded to go to bed. Would not tell anyone of his plans and would sometimes wander off for several days at a time. He had delusions of sight and imagined that people were after him. During the latter part of his life his wife had to work out to support the family. He never owned property but rented the log cabin in which he lived.

*Thomas C.'s Father.*

*Lemuel C.* was born in 1855. The field worker at Skillman believes that he was feeble-minded, she also reports that he was a laudanum fiend, and that he consumed it in large quantities. They were living on —— Mountain in a log house. They are described as wretchedly poor and destitute. One informer remembers seeing them seated around a table composed of boards eating out of hollow squashes and drinking from old tomato cans. In 1897, Lemuel C., his wife and his children, May, 15, Nell, 9, Nancy, 7, Thomas, 5, and Vernon, 3, were committed to the County Almshouse. Lemuel C. died there at the age of 49 of tuberculosis. He had rheumatism severely.

*Thomas C.'s Mother.*

*Phœbe E.* was born about 1858. She does not know her exact age. She, as well as her sisters, were given out to be brot up. She knows nothing about her parents except that they are dead. She claims that her first husband deserted her just before the birth of her first child. She told the field worker at Skillman that she feels sure that he ran off with her sister; at any rate her sister disappeared at the same time and neither of them have been heard of since. She then married or lived with Lemuel C. and had eleven children. The youngest, she says that she gave to a woman but she cannot remember her name. She heard later that the child died. After going to the Almshouse with C. she ran off with another man from the county house; but claims that she deserted him in the night. She never stays in one place, often tramps for miles to make a visit, stays a few days and then goes on. She claims that she married her third consort several years ago. She has been living with him for several years off and on in a place called Roaring Gulch. She is a shiftless housekeeper, is both feeble-minded and epileptic. Says that she has always had "fainting spells," drops down anywhere for no apparent reason. She feels the spells coming on and screams. Has always been immoral.

In concluding this topic it may be said, that perhaps after all the best evidence of accuracy in the data will be discovered by a study of the charts themselves, and the figures that have been compiled from the charts. The internal evidence of a high

degree of accuracy is to us very strong. We trust it will be apparent also to the reader. Our work has been full of surprises; we have had no preconceived opinions; we have had impressions and feelings that we should find such and such things. These have as often been contradicted as approved. At different times in the investigation we have thot that the figures were going to show now one thing and now another. As examples of this we may mention the question of the influence of alcohol and the Mendelian law as applied to the heredity. Not until the last of the data were worked up did we have any idea how these matters were coming out. We realize that to many people our conclusions will be unacceptable. Such persons will, if they cannot find a flaw in the argument, be apt to question the reliability of the data.

# CHAPTER III

## THE DATA

### THE CHARTS

Each chart represents in graphic form the history of a family. The starting point is always the child who is in The Vineland Training School, designated hereafter for the sake of brevity as *our child.*

The following explanation will enable the reader to understand the charts.

### CLASSIFICATION

Our 327 families naturally fall into six fundamental groups as follows:

1. Where feeble-mindedness is *certainly* hereditary — designated hereafter for brevity's sake as the Hereditary Group or Hereditary (H). 164 families.

2. A group which, while not so *certainly* hereditary, yet shows high degrees of probability that the feeble-mindedness is hereditary — designated as Probably Hereditary (P.H.). 34 families.

3. A group in which there is no evidence of hereditary feeble-mindedness, but in which the families show marked neuropathic conditions — designated as the Neuropathic Group or Neuropathic (Neu.). 37 families.

4. A group where it is clear that some accident either to mother or child, including disease, injury at birth, etc., is the cause of the feeble-mindedness — designated the Accident Group. 57 families.

5. A small group where it has been impossible to assign a

cause. The family history is known and is good; there are no accidents. We have designated this No Cause Discovered, or briefly, No Cause (N.C.). 8 families.

6. A group where so little of a definite character could be learned that it was impossible to classify them — designated as Unclassifiable (Uncl.). 27 families. This group is not counted at all in making up the percentages. One case in this group was thrown out because it proved to be a case of insanity and not of feeble-mindedness. See Chart 314.

These groups will be discussed in the Chapter on Causes.

Each of these *fundamental groups* of charts is subdivided and arranged according to mental age as determined by the Binet-Simon Measuring Scale of Intelligence. This gives the child's mentality in terms of a normal child, *e.g.* mentality 7 means like a normal or average child of 7 years in intelligence. We may speak of a man 40 years old as having a mentality of any age from 1 to 12. We say he tests 7, or his mental age is 7.

EXPLANATION OF SYMBOLS

Feeble-minded.

Normal.

Probably feeble-minded.

Probably normal.

Mentality undetermined.

Shows the child in the Vineland Training School.

Miscarriage or still birth.

Under a symbol indicates that the individual was in some public Institution.

In the first the digit shows the number of persons represented by the symbol, *i.e.* two normal men. In the second the digit shows the number of children, *i.e.* a feeble-minded woman had three children.

Died.

Died in infancy (under 2 years).

Each chart is accompanied by a condensed description of the child. The information comes from parents, physicians and the Institution records, including the school department and the department of research. The latter are incomplete on the physical and the physiological (bio-chemical) side because we have not yet completed systematic studies of these cases. That must wait for a later report.

Each chart and description is accompanied by a photograph of the child whenever it is proper to publish it.

Letters used around the squares and circles are —

| | | | | | |
|---|---|---|---|---|---|
| A | Alcoholic — meaning decidedly intemperate, a drunkard | | | | |
| B | Blind | I | Insane | Sy | Syphilitic |
| C | Criminalistic | M | Migrainous | Sx | Sexually immoral |
| D | Deaf | Neu. | Neurotic | T | Tuberculous |
| E | Epileptic | Par. | Paralytic | W | Wanderer, tramp |
| G | Goitre | | | | |

A horizontal (or oblique) line connects persons who are mated. Unless otherwise indicated, they are supposed to have been legally married.

Symbols dependent from the same horizontal line show brothers and sisters. In the fraternity of *our child* these are arranged in order of birth, the first born at the left. Case 12 is the only exception.

A vertical line connecting this horizontal line with an individual or with a line connecting two individuals, indicates the parent or parents of the fraternity.

When the parents were not married the fact is indicated either by the expression "unmarried" or by the word "illegitimate" placed near the symbol for the child. A dotted line connecting two symbols may indicate incest.

Large Roman Numerals on the Charts of the Hereditary group indicate the matings that have been used in the study of the Mendelian law.

**HEREDITARY FEEBLE-MINDEDNESS**
**CASES 1—164**

CHART 1

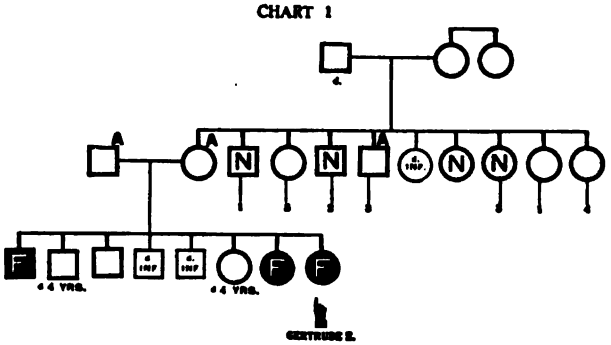

**CASE 1. GERTRUDE E.** 16 years old. Mentality 11. Has been here 7 years. American born, nationality of parents unknown.

Gertrude is a nice looking girl and when admitted at the age of nine was thought to be merely backward. She could take care of herself, read in the Primer, count to fifty, knew ordinary combinations in numbers and was fond of music.

For two or three years we clung to the belief that she was merely a backward child. She made good progress in school work, learned to read quite well, could reproduce a story and memorize rapidly; did excellently in entertainments. Gradually, however, in spite of all efforts she fell behind and soon reached her limit in reading, writing, and number work, and apparently her mental development ceased at eleven. She shows relatively high intelligence, however, in almost everything she does; does excellent work about the cottage, sews very well, is quite a musician, helps in the kindergarten, and is generally a useful, pleasing girl. She is nearly always good tempered, although very changeable, inclined to be moody, is sometimes very sober; is obedient, truthful, active and affectionate. She dances and sings and loves to appear in entertainment work. Her defect is hard to describe. Everyone who knows her feels

that she ought to develop and yet it is perfectly clear that she will not; she is incapable of generalizing or having an ambition or developing any womanly qualities such as become her age.

A glance at her family chart will show that it is pretty clear that there must be an hereditary taint. An older sister and an older brother are both defective; all the rest are dead except one other brother who is undetermined.

The father and mother were both alcoholic and may possibly have been mentally defective also. Unfortunately we have as yet been unable to secure data on the parents or on very many others in the family. It is hoped that we may yet be able to get hold of some facts that will help explain this remarkably interesting case.

Gertrude is a good example of that type of girl who, loose in in the world, makes so much trouble. Her beauty and attractiveness and relatively high grade would enable her to pass almost anywhere as a normal child and yet she is entirely incapable of controlling herself and would be led astray most easily. It is fortunate for society that she is cared for as she is.

**CASE 2. Florence and Byron T.** (Brother and Sister.) Florence T. 23 years old. Mentality 8. Has been here 10 years. Was born in New Jersey, parentage uncertain, but probably American.

Byron T. 19 years old. Mentality 11. Has been here 13 years.

When admitted Florence was spoken of as always smiling and silly; mouth open; went upstairs sideways. Her memory and attention were fair. She was sulky, could do errands and house work, was excitable, gluttonous, affectionate, fond of children and play, indolent and vulgar; did not know any school work and has not learned much since.

At the present time, she does fancy work, house and laundry work. She is a good worker, always cheerful and happy. In the Binet Tests she can count thirteen pennies, describe the pictures, sees the lack in the unfinished pictures, can copy the

square but not the diamond; recognizes colors and names them; can compare butterfly and fly, etc., cannot count backwards; repeats the days of the week and the months of the year. She cannot count the stamps nor repeat five figures. She is good natured and a willing worker. If not in the care of the Institution she would probably be the wife of some low grade worker and the mother of many children, probably defective like herself.

The brother, Byron T., is 19 years old and tests 11; has been here 13 years; when admitted, was excitable and nervous, cried

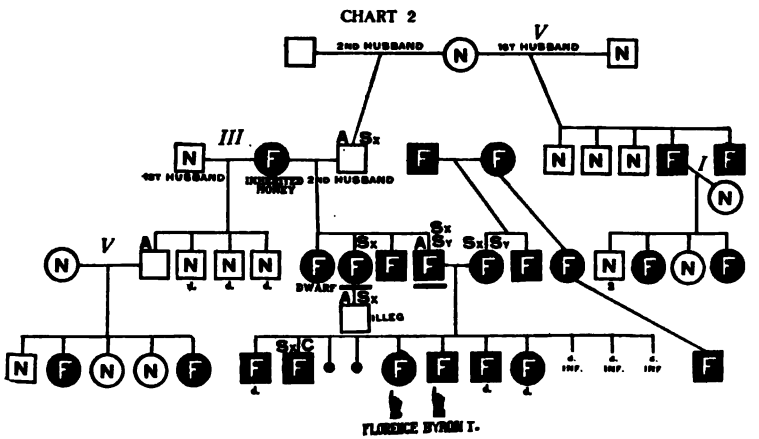


and laughed without cause, was gluttonous, destroyed clothing and furniture, was dangerous with fire, not truthful, nor trustworthy; active, obstinate, sly and passionate. When put into school here, he made very good progress for a defective and learned to read fairly well, to write some, was less lazy, took more interest in things. He reached his limit, however, in school work, even in basketry; did something in music, but was more especially a farm boy, since he was strong and able to do a good deal of work under direction. As will be noted, he is three years higher grade than his sister. He can remember six figures but not seven. He can repeat 60 words in three minutes, can make

CASE 2, BYRON T., AGE 19. MENTALLY 11.
CASE 2, FLORENCE T., AGE 23. MENTALLY 8.
CASE 8, NANNIE D., AGE 30. MENTALLY 10.

rhymes, but cannot put together the dissected sentences. He is one of our highest grade boys and is entirely lacking in stigmata of degeneration; indeed, is a handsome lad.

A glance at the chart shows what a very bad family this is. The parents were feeble-minded, syphilitic, and sexually immoral. The father, who was also alcoholic, died in an almshouse. This is one of the worst histories, socially and morally, that we have. It is said that the miscarriages and infant deaths in the family were syphilitic cases and were due directly to the contamination. An older brother is sexually immoral and criminalistic. Three others are dead. The father's two sisters and brother are feeble-minded. The mother had a brother and a half-sister who were feeble-minded. The father's mother was feeble-minded and was twice married. By her first husband she had four children, all normal, with the possible exception of one, but her defect was transmitted to her grandchildren, two out of five being feeble-minded. The father of our boy and girl was one of the four children resulting from the second marriage of this woman with a man who was alcoholic and immoral. Our children's mother's parents were both feeble-minded.

The paternal grandfather was the child of a woman who was twice married, he being the son of the second marriage, of which nothing else is known. By her first husband, who was considered normal, there were five children, two of whom were feeble-minded. One of these married a supposedly normal woman and two children out of five were feeble-minded. It is evident that the defect here runs back at least into the fifth generation.

This is a remarkable family. They have been largely objects of charity, although they inherited some property which they quickly squandered. Neither of the children would be recognized as defective if out in the world, and both would undoubtedly go the way of their ancestors in crime and immorality as well as in the matter of marrying and reproducing defective children.

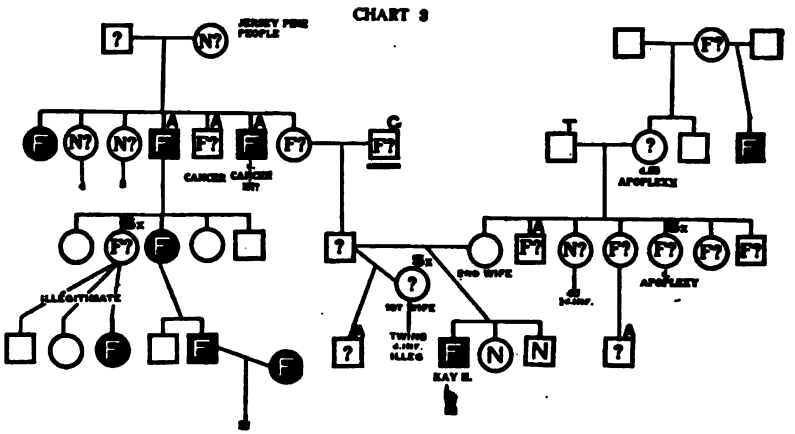


**CASE 3. KAY H.** 17 years old. Mentality 11. Has been here 3 years. American born, of American parents. Had measles at the age of 4 years.

Kay's case is an interesting one. When he came here three years ago he came as an incorrigible boy, had been in public school seven years and attained only the third grade; he could add, subtract, multiply and divide, but was generally disobedient and incorrigible. By the Binet tests he was eleven years mentally, which showed him at that time only three years backward, and we could not therefore pronounce him certainly feeble-minded. This, however, seemed to be a suitable place for him, for the time at least, and so he was put to work. He has always been a difficult boy to manage; he is not satisfied with his work, is reported as being lazy.

During these years he has made no mental progress whatever, so that to-day at the age of seventeen he still tests eleven despite all efforts to train and educate him.

This is a fair sample of this type of boy who at thirteen or fourteen we are not willing to consider feeble-minded, but who at seventeen is distinctly so.

If we had had the family history at that time, we should probably have been more suspicious but not certain even then. Altho

there is enough feeble-mindedness in the family, it is not so placed that we could have predicted that this particular child would surely be defective. However, when we know that he is defective we can find plenty of reasons for it. Here we find the usual low grade family with its sexual immorality, criminality and alcoholism. Several have been or are in institutions at state expense.

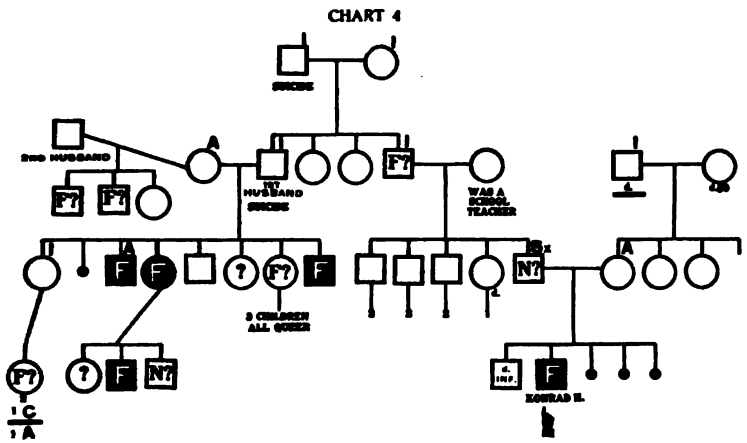


**CASE 4. KONRAD H.** 21 years old. Mentality 11. Has been here 11 years. American born, of American parents. Had spasms. Had measles at 3 years. Has had diphtheria and marasmus. Assigned[1] cause "the alcoholism of the mother."

Konrad was ten years old when he came; knew part of the alphabet, could count a little beyond ten. He has improved greatly and is now one of the nicest boys in the school. He is polite and manly, nice-looking and is liked by everyone; he is one of those boys that tempt the teacher to believe that much can be accomplished, and yet, as usual, he falls just short of that which will make him efficient in the use of the arts of reading, writing and num-

[1] "Assigned cause" always means the cause given by parents or sometimes by the family physician. It is to be noted in contrast to our cause; *e.g.* in all the cases in the present group the real cause is evidently the hereditary taint.

ber work. We include some of his work to show just what may be expected, at best, of some of these high-grade morons. It will be noticed that these letters are very well worded, but they are a little short in capitalization and occasionally in spelling, altho, as a rule, Konrad spells very well. The letter to Josie is a little clandestine correspondence with one of the girls in the School; it shows the presence of that interest in the opposite sex, which is very rarely found among Institution children, or at least is very rarely strong enough to express itself in this clandestine way which would be so common among normal children of the same age. The handwriting in these letters is typically childish, large, coarse and angular. His spelling has been retained.

1

Vineland N J
Nov 1st 1910

Dear Mother and father

I thought I would write you a letter to let you know I am well and hope you are the same. How is Jessie getting along hope she is well Will you please be so kind as to send me a new necktie and two collors I will thank you very much. now as I told you I would to learn to play a violin. Now if you will please tell Professor Johnstone about it I guess he will be glad for me to do so.
I guess this is all for this time. I hoping to hear from you soon
I remain as ever

your loving son
Konrad H.

2.

Vineland N J
April 3, 1911.

Dear Mother and Father

I thought I would write you a few lines to let you know I am well and trust you

are the same Please let me know why you are
not writing to me for I am anxious to hear from
you.
Had brother got any work yet and if he has I
geuss you are glad The weather is pretty nice
here and I supose it is ther same.
I geuss this is all I can say now so I will
close now with love
from your loving son

Konrad H.

3.

my dear Josie
I write you a letter to tell you not
to pay any attetion to what flora C. says because
it is none of her Business She Just is Jules
because I like you.
Well how are you I hope you are well I recived
your mesage you sent to me today and was glad
to hear from you I thoght you looked very nice
inded today.
Josie please to not let any one see this for if
you do it will cause you and me lots of truble.
and when you read it read it on a sly please.
A —— sends you his love also,
I am sending you a very pretty Valentine.
With lots of love to you from your friend

Konrad H.

Answer soon.

Konrad is somewhat undersized but is neat in his appearance, a free talker and would pass for normal almost anywhere. Any defect that would show would be attributed to lack of schooling rather than to mental defect.

Eleven years of experience with him shows that he is as truly defective as any of the rest. This is surely a hereditary case although the defect does not show in the immediate family. The mother was alcoholic; the father is probably normal

although there is a slight doubt. The paternal grandfather is probably feeble-minded, at least was insane, as were his father and mother. The grandfather also had an insane brother with feeble-minded children and grandchildren.

**CASE 5. GUSSIE G.** About 18 years old. Mentality 11. Has been here 11 years. American born. Father German. Mother Irish. The child had measles, whooping-cough and scarlet fever.

This is an interesting case in that Chapter of feeble-mindedness which is not yet written — "The Relation of Feeble-mindedness to Insanity." We can give something of this boy's early history from his own work, for he has written a brief autobiography —

> "I was born in 1894 in a boat house I lived with my mother, my Father ran away when I was 3½ years old. then my mother and I left together. I was 3½ years old when we left ——. My birth place which is a half of a mile from —— then my mother and I traveled we went lots of different places when I was near seven years old we went to the poor house
> My mother worked in a laundry there. I was there nearly a year. then I lived in Metuchen for several weeks. then I came here when I was 8 years old. and my mother went to New York City now she is working and getting along good. I am going to school in the afternoon and working at the Taylors trade in the morning I started to learn the trade at near fourteen."

The boy was sent here from the Almshouse because it was recognized that he belonged here rather than there. At that time, at the age of between seven and eight, it is recorded that he could help himself, could read and count, knew color and form, was fond of music, had a fair memory, could do housework, was easily taught, habits good. He was immediately placed in the

kindergarten class where he did very well; sang with the children, learned to count to fifty-nine and to write a few sentences. He made very good progress in school for the next four or five years. By the time he was twelve years old he could do the four ordinary operations in arithmetic, knew money, understood time, and long measure; could make a basket completely. He was neat and particular about his dress and always an attractive looking boy. He was very quiet and well behaved; had good table manners, was easily managed.

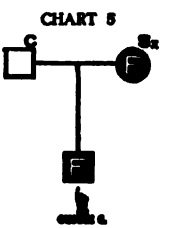


When he was about thirteen or fourteen he began to deteriorate; it would appear that we have to do with a case of adolescent insanity. At that time it was noted that he was not doing as good work in music as he did the previous year, did not take as much interest in his work — had silly spells and laughed at nothing; became slow and fussy, not as full of life as formerly. These first symptoms were gradually accentuated until in 1910 they became noticeable in many lines, altho still not sufficient to be recognized as insanity by any but the experts, if by them. He developed a great ambition to learn, and asked for a set of books, wanted a reader, history, arithmetic, and a number of other school books that he might study by himself. He went to school in the forenoons and worked in the tailor shop in the afternoons; he called tailoring his trade. He also developed at this time a great notion of going out and earning his own living; developed bad sexual habits also and seemed to have a great deal of morbid thought on this subject; had a strong habit of hoarding things and would take anything that he could find that he wanted. At this time also he developed a habit of making various notes and memoranda about all sorts of things. The character of these jottings will be gathered from the following samples. His spelling has been preserved.

## Winter

### Good winter clothing

#### Have put away

1 pair of patented leathers shoes.
1 bundle of nice wide shoe strings
1 pair of things for patented leathers
1 pair of soft gatoes
2 pair of colored socks 2 black pair
1 pair of fine gartors
2 swits of winter underwear
2 good swits 1 navy blue 1 nice black
2 pair of suspenders
2 nice white soft bussom shirts
1 box of linen collars
half dozen neckties
4 pair of cofs
1 pair of kid gloves
2 felts Hats black one blue
1 box of handkerchiefs
1 coat Sapper
1 over coat

#### What I will have for Summer

1 pair of tan shoes
1 pair of white shoes
camphor balls for the swits
2 pair of shoe strings
2 colored socks 2 black socks
1 pair of gartors
2 good nited Swits of summer under wear
2 best Swits 1 brown 1 light Swit
2 silk shirts
1 pair suspenders
2 pair of white pants to change
1 box of collars
half doz. silk neckties
1 pair of kid gloves

1 white hat
1 pananmar straw hat
4 pair of cofs

Bible & prayer Bood.
Treasures to these.
Couple gold stick pins
two sets of gold collar buttons
two sets of gold collar buttons
gold ring
gold watch and chain.
money book
shoe horn
shoe hook
Bible
umbrella
comb and brush silver
if I join any society I will
there colors
paten Leather Polish and rags
finger nail clippers
little big looking glass
pocket book
Rubber heals
pen knife
bages.

Things that I will use very seldim.

Brace
rain coat
articts
House slippers
Bathing Swit
Cardigan jacket

Different Medicnes and fixings up.

Suspensory
good sweet soap
Jack Rajor

Shaving brush
shaving cup
shaving soap
talcum powder
Bayrum
sweet powder to keep ties and things smell nice.
Bottle of cloon
cold cream
tooth powder
tooth brush
bottle of smelling salts
Some Medicnes of other kinds

alumn good for feet
feet powder

All of the things that happen to me
put down in book

Easter Sunday April 11, 1909.
My watch got stolden
I put it in my coat in the
linen closet and I have
not got it. (End.) Some of
the boys must of stold it,

Mon. 12

Not much said
about it today
some asked me if I got it
yet & said no.

Tues. 13

Mrs. Nash
said last that they
would hunt for it today
and see if they
could find it. (End.)

April. 21.

My watch returned
today they searched
and found my watch in
John Graves satchel
he stold it. I had a scrap
with Charles Corson (End.)

Thur. 22

Gave us some
of our things
and kept the clothing
today. (End.)

Oct. 31/08

We had a fight up in the
band room. and this
is the first with Andrew
Jones for over three years.
End.

January 28, 09.

I had another fight with
Andrew Jones this
is the first one this year so far
Tailor Shop (End.)

Mar. 8. 09.

Monday I had to fights
nearly one was with Donald
Harris and John Heintz
before breakfast in the Barn.

Repairing on my Body

Get my teeth fixed and done
cleaned by a dentist O.K.

Get my body exammaned
by a doctor and told.

And have my feet attendett
to better with a doctor and
my head.

Kept at Schooling and trade

And dont forget to have a
specialist Doctor tend to my
privates.

Remember on My Body

In Heighty 5 feet 4½ inches tall
I weight 138 pounds
size shoe 7½ to 8
Socks size 10
Drawers 32 undershirt 34
Swit size 35. Comftorable 36
round neck 14½ in. collar
On the blower first time
4.200 Mar. 16, 1909/Second
time 4.600.
Out side shirt 14½ Cap 10.½.

Example

$3 \times 248 + 1242 + 2464 - 1245 =$

```
  2
 248
 × 3
 744
+1242
1986
+2464
4450
-1245
3205        (Answer)
```

(Keep) I had three years and a half
expearence in the Taylor trade in Elizabeth for
I can do most anything pretty good in the
Taylor work. But cutting out and pressing and
putting linen in a coat and pants.
(Find out what nationaliaty)

Mr. M. had tried to teach him tennis — this is his account of the game.

Playing Tenist.

they are
four
people
can
play if
Mr. M.
was play on
Freddie one side
Charles K
H. Newton on the
other side and if
Charles K. was searving and
knocked to balls
over the line that
means the Mr.
M.'s side got 15
to their love, and
when they hallow
out fifth thirty that
means our side got
thirty to their 15.
50 makes
one game
and besides when
he serves a
good one to you
and you dont
hit it then theirs

15 for him you
can play a game
with only to or 3 people the are
two big lines on
each side when
you are playing
with four people if the
ball gows out on
the grass on any
side then thats
15 more for him
and if you are playing with only
two or three men and
its different if
the ball goes out on the inside
long line on any side then its 15
for the other side whoes
playing against
you they are a few
little words a do
(end) (Tenist)

Remember

I got two teeth filled on the
upper row with gold filling
on Thursday April 28, 1910.

And I got two teeth which were
filled with silver exchanged
and filled with gold
that are on the bottom.
on May 23, 1910.

I had the silver in the two
bottom teeth since Feb. 6, 1907
until that day in May it
has been in 3 years 3
months and 17 days.
(End)

Remberincs of The
Songs and Duets

Sacred Soloes
means any thing
concerning about
God and also in
Church

2

Sacred Duetts
means just the
same.

3

Secular Soloes
means anything
that concerning
the world and the
people in it.

4

Secular Duetts
means just the same.

(He seems to be planning to run away,
which he did later)

Remember to New York

Take a electric train from Vineland to Camden that lands in the new part of the depoe from there you go in to the steam tunnel. You take a steam train to burlington, N J. From there you take a train to Jersey City then 23 St. feary then you get to New York. (End) This is a better way to New York than the other. You take a electric train from Vineland to Camden. then you land in the new part of the depoe and you take the market street feary to Philadelphia. You take a car which is called 63th and marked broad street depoe lies between 15th and Market then ask for train to New York.

Remember to Hackensack

You ask for a ticket at Vineland depoe
to Hackensack. Then from Vineland
take a train to Camden, N.J. Change and
take a train to Burlington ! Change at
Burlington, take a train to Newark.
then take a trolley marked Hackensack
N.J. then a car for 257 Main Street.
(End)

Extra thing.

1 set of School books
complishion book
writing pads
pencil box
pencils
essers
writing pen and ink
pen whipper
fountain pen filler
fountain pen
box of letter paper and envelopes
envelopes
keep letters from my mother
and friends
pencil sharpner
dictionary
(Book Henry Wood Natural History)
College song book
postal card albumn
Story book of other kinds
picture of Mr. ——
water wings
ice skates
tennis Racket
sissors
drinking glass
china cups and saucers
and dishes all kinds

silver spoons
furniture Home
trunk cocanutes
Phonograph records

(End)

Remember (Good Friend)

I am giving a good friend $2.75¢
to help him out so he will send
me after he gets a good start
$5.00 or more on a sly then I
will make haste next annual
meeting night or during the day
surely. He will have it all fixed
and arranged for me. Ill meet him
in Hackensack.

Vineland, N.Y.
July 20th, 1910.

Dear Friend

I thougt I would write you a letter to let you know that I am in the best of health and hoping you are the same.

I am still at my studies now just as you would see me if you were where I am. The tailorist is away and she will be back in Sept. —— so when my boss comes back from her vacation she is going to put me at cutting out and I will learn most of the other little things in my trade. I hope you are having good success and good luck.

I dont want you to forget what you promised me before you went away and if you do not get time or much chance to send it to me you know leave it go until next year. When we meet to gether then you can give me what you owe me.

I expect to be up to see you next annual Meeting Night surely. So I will be traveling that night. And I am sure that we will have a good time. And I hope you will have everything arrenged and fixed for me when I arrive.

I am keeping your Electricial book for you and it is in good condition.
A few weeks ago I wrote a very strict and important letter to my Mother which I told you that I would write and I have written to her and got the answer so my mother wrote and told me to be contended and stay here for another year, and she says another year will not be long and it will go swiftly bye and when she comes out next May she says that she will take me right out. And if she dont take me out I will be up to see you surely. Now they are not talking or saying anything about you everything is silent. Max wanted to go home on the fifteenth of July. but his mother wrote and told him in the letter that she wrote to him on his birthday that they are having a new floor put in the house in one of the rooms. which the owner of the house is having done his self and he is going home surely on the 20th of July of this Wednesday.
Two new candidates who are high up as you know ran away a short time ago they are M. Brown and Joe C they have been away from the old hole. They have not showed up yet. Professor Brown has been gone near over a couple weeks, I dont think they will get them do you.
Well this is all I can think of to say to you, and I porbably will not write again. But please do not forget me will you. I am thinking of you every now and then hoping that you are getting along good.

From your loving true
Respectifully Gussie.

Some of his writings are much more rambling. Shortly before he ran away it is recorded that "his work is beyond reproach but so slow that it is painful." He could read in Brooke's Fifth Reader; seemed to be constantly thinking of mathematical problems, asking the result or asking the meaning of some big word. One can hardly doubt that all this is a premonition of

insanity, even if we may not call it already developed. On the other hand it may possibly be interpreted as indicating a strong desire to get out in the world and work for himself, all of which, uncontrolled by any good judgment, is the working of a feeble-minded individual of rather high grade.

Unfortunately we have been able to determine almost nothing of his family history. We did succeed in finding his mother, who is feeble-minded and sexually immoral. She seems to have about the same mentality as her son, as is somewhat indicated from one of her letters to him, which follows: —

New York City
76 —— Avenue,

My dear son Gussie
You are better make up your to remain where you are for another year. And try and be contented. As I would have no busness of out now it is terrible warm in New York the heath is just killing Gussie the buiding where I am working is going to be pulled down so I will be out of work in a few week. So I cant have no home so be a good boy now and try and be contented for another year an other year will not be long slipping so the next time I go out there I will take you right out I remain your fond mother

Nora G.

The father has deserted the family and nothing is known of him except that he is criminalistic.

**CASE 6. NANA T.** 30 years old. Mentality 10. She was born in Roumania, came to America at the age of 12 and has been here 17 years.

Upon admission at the age of 13, she did not understand a command, did not recognize color or form, had no school knowledge; was affectionate, not fond of play, not truthful nor trustworthy; was indolent, obstinate, and destructive. She was at once placed in our school department and after eight months she recited a

memory verse in English; knew red, yellow, orange, purple, brown, black and white. Three years later, she had learned her two and three tables; could count by twos to a hundred and back; could add small numbers; could not write a letter without copy. This seems to be about her limit.

As a child, she was considered a dwarf. This, however, was due to her short legs, as will be seen from her anthropometric measurements. In standing height she is as tall as something less than 10 % of normal people of her age. In sitting height, however, she is as tall as 70 %; the same in weight. Her grip is excellent in both hands. Her lung capacity is down again to 10 %.

CHART 6

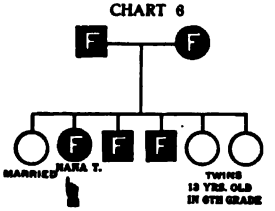


In manual work, she has taken training nicely; can sew well, clean, scrub, mend, dust and take care of children, in fact, can do general housework, under direction, very satisfactorily.

To-day she is pleasant and agreeable, one of the best Institution helpers, is happy, contented and useful. Perhaps no better illustration of the troublesome girl in society can be found than Nana. She is so high grade and able to present such a good appearance that very few people would be willing to consider her defective. Yet of her defect there is no question. Those who know her in the Institution have learned it by experience and the same thing is shown by psychological examination. She is, for instance, unable to put three words into a sentence; she cannot think of sixty words in three minutes — her limit is forty-three; she cannot put dissected sentences together. These are all eleven year old tests. She cannot read well enough to remember six facts out of the selection read. She has, however, a certain shrewdness, and a certain good judgment in regard to simple matters, and these would deceive those who are unfamiliar with defectives.

The following quotations from a couple of letters will show her ability.

TO HER MOTHER

"I heard some sad news about you" (the father told her the mother is feeble-minded) "and I do pity you for I know that you have a very hard life where you are . . . this would be a good home for you to live and I think you would be happy here too you would be better off."

LETTER TO SANTA CLAUS

Vineland, N. J.
Novem. 12 1911

Sunday

"Dear Santa Claus.
I would like very much if you will kindly bring me a *real nice* Pair of shoes for *best* this is the size of them, the number 550 15745. and I also would like to have three Pairs of nice fine stockings I need my shoes very badly. I hope you don't think I asked for too much. I am so glad you are coming around again, good luck to you. I will close bye thanking you kindly for your kindness each year and hope you will never die out. Good bye from your loving friend.

Nana

P.S. stockings size eight and a half. and a nice fine pair of shoes."

The first is from a letter to her mother and shows that bit of judgment and good sense which is gratifying. The second letter is to Santa Claus and shows her naïveté very nicely.

Without the protection of the Institution, Nana would be the victim of anybody who came along, and would live the same miserable, unhappy life that her mother has lived and also would probably be doing as her mother has done, helping to populate the world with defectives like herself. As will be seen from the chart, Nana has two younger brothers, both defectives;

an older sister is married but cannot be found, hence her mentality is unknown to us.

Two younger sisters, twins, are eking out a miserable existence with the father. They are going to school and are probably of the same high grade as Nana, possibly even a little better; their mentality cannot be accurately determined and what will be their history remains to be seen.

The father and mother are clearly feeble-minded; they have separated. The father is counted a very dangerous man. He has made several attempts to regain possession of the girl, but she has no desire to return to a home where there is insufficient food and clothing, and where the father refuses to allow a fire, even in the dead of the winter.

It will be noted that this girl came to this country when she was 12 years old and was admitted to this Institution about a year later. Here seems to be a case of a father and mother and at least three children all feeble-minded having passed the customs officers and been admitted, perhaps without question. One at least has been a burden upon society for 17 years, the others are probably worse.

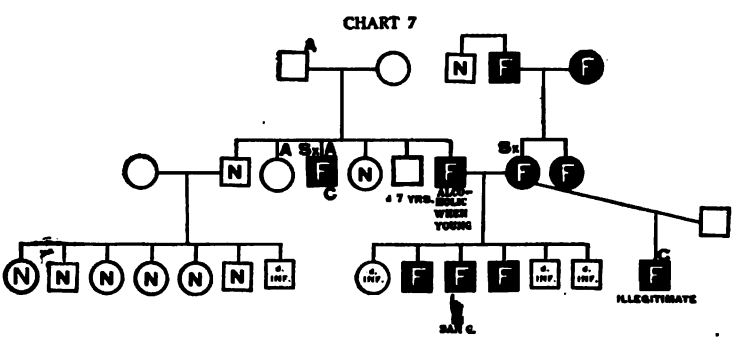


CASE 7. SAM G. 18 years old. Mentality 10. Has been here 11 years.

At the time of admission was large and repulsive looking, did not understand language well; only fairly obedient; speech thick; could not read nor count; did not recognize colors; sight

poor, hearing good; fond of other children; not truthful, profane; was in the kindergarten at first; learned to write and count 10 and do simple combinations of numbers, could copy a few words and write his name from memory. After he had been here four years, it is recorded that "all of his work is extremely poor. He seems to have the ability, but is too well satisfied with himself to try; does basketry and woodwork, can do some simple arithmetical processes." He never got very far, however, with his book work. He can write a fair letter as will be seen from the following:

Vineland, N.J.
11–30–12.

Dear old Chriss
I thought I would write you my Xmas letter telling you that my trowls you sent me last Xmas was stolen by some Italians While I was eating dinener so I thought I write and ask you to bring me 1 plastering trowl 1 brick trowl & a pr. auto-gargles to keep the cement dust out of my eyes I shall take better cair of them this year as I have a box with a lock and key I shall bid you good bye fore this time yours sincerely,
Sam G.

His handwriting is very poor and slovenly, but his spelling is rather better than usual for such children. At present, he is doing industrial work entirely, is quite a fair worker and is generally contented. He has quite a remarkable memory, seldom forgetting a selection that he has learned to recite.

He is American born, but the birthplace of his parents is unknown. He is one of our highest grade boys, and would be considered by many more silly than feeble-minded.

Both parents are feeble-minded. The father is very high grade, so much so that for a considerable time we were very much in doubt as to how to classify him. His feeble-mindedness takes the form which makes him noted as being "peculiar."

He is ignorant, lives alone, but is a good workman, sober, honest and industrious. He has, however, a brother who is distinctly feeble-minded, sexually immoral and criminalistic. There are also a normal brother and a normal sister, besides a brother who died at seven years, and a sister who is wretchedly alcoholic and may be feeble-minded, although this has not been determined.

The mother of our boy is also sexually immoral and has a feeble-minded sister. Their parents were both feeble-minded. Our boy has two feeble-minded brothers; two other brothers and a sister died in infancy. A half-brother is a low grade defective and criminalistic.

Our boy is of the type that would pass for bright and brutal. He would get into all kinds of trouble and commit any sort of crime, but having a certain shrewdness would be considered simply as an ignorant rowdy, a very dangerous person to have in any community. The probabilities are that he would spend most of his time in jail.

**CASE 8. NANNIE D.** 30 years old. Mentality 10. Has been here 21 years. American born, American parentage. It is reported that opium and spirits have been used by the whole family for generations. The child had whooping cough at the age of 12 and grip at 15.

Upon admission at the age of 9, she knew the alphabet, but could not read, write nor count. Although she tried for a number of years, was never able to get very far in these lines. Industrially she did better, as they usually do. Now sews very well and takes charge of a dormitory, does some good woodwork. Is somewhat queer, goes to school when she is able—is somewhat sickly. She is sober, silent and sometimes stubborn; generally obedient and good tempered; is truthful, excitable and very sensitive.

The chart shows at a glance the large amount of alcoholism throughout the different generations. Immorality and illegitimacy, together with the mental defect, show a low grade family throughout. The father and mother of this girl were both feeble-minded and alcoholic and the mother was immoral.

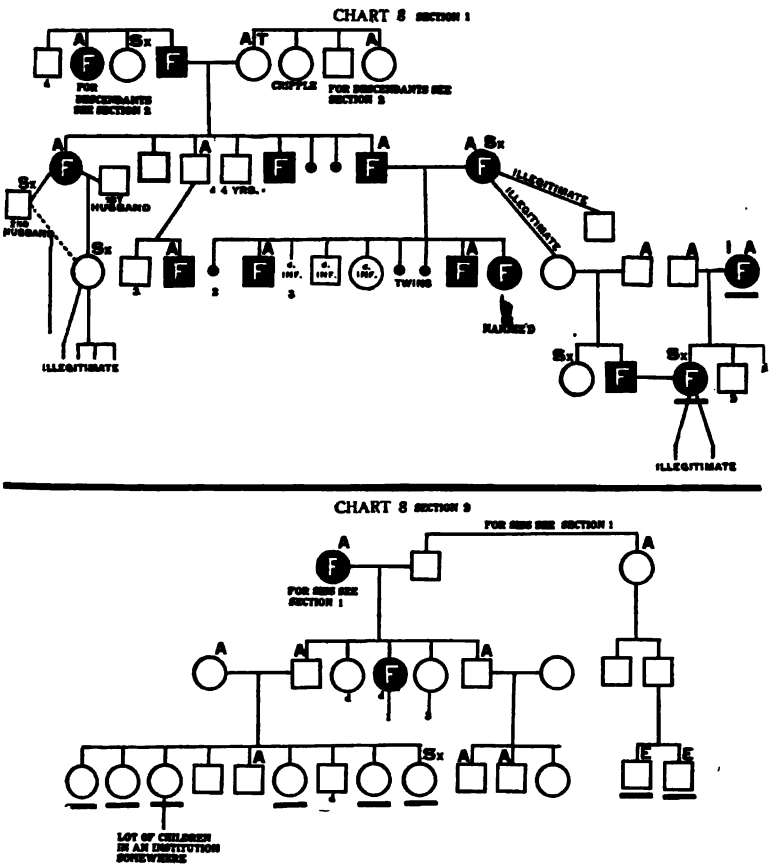


Section II of the chart shows the result of the marriage of the paternal grandfather's sister with the paternal grandmother's brother, said sister being feeble-minded and alcoholic. At least one of their children was feeble-minded and two others alcoholic and the descendants from these are alcoholic and several are inmates of public institutions. On the entire chart we find nine people, besides our girl, who were inmates of such institutions. This is surely a heavy expense to the community which should have been prevented.

CHART 9

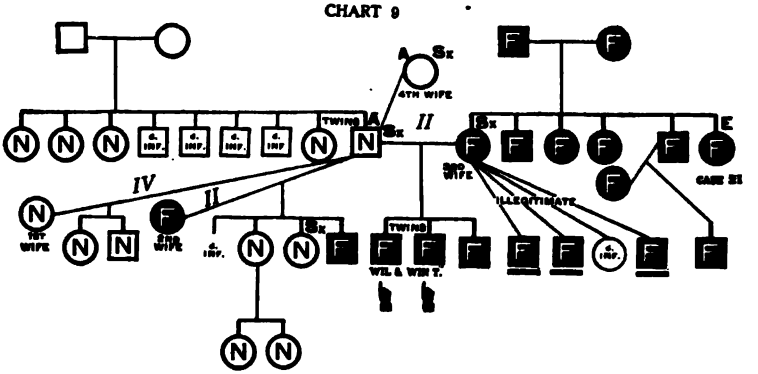

**CASE 9. WIN AND WIL T.** (twins). 21 years old. Mentality—Win 10, Wil 8. Here 12 years. American born. Nationality of parents unknown.

These twins are not strikingly alike. They are of normal size and good proportion but Win is the better looking of the two; is cheerful, while Wil is often sullen and morose. As stated, Win is two years higher mentally than Wil, the difference being shown throughout their Institution history. Win is a boy that would pass for normal with all but experts, and indeed will undoubtedly earn his own living if he does not get into temptation. In the School he steadily improved up to a certain point and is quite good in many lines. His attainments in reading and writing are probably indicated by the following extracts. The first is a spelling lesson — the writing is poor but legible; it will be noted that the words, some of them rather difficult, are spelled correctly with three exceptions. Second are some extracts from a letter written nearly a year later. The spelling is not so good as in his formal spelling lesson. The penmanship is better. The matter is childish and his form of expression is just about that of a child of his mentality: —

| | | | | |
|---|---|---|---|---|
| conveying | Asthma | catarrah | camphor | quinine |
| sheleton | military | cyclone | cream | ipecac |
| magnesia | congealed | merchandise | whiskey | cadet |
| Christmas | Santa Claus | snow bolls | tornado | croup |

CASE 9, WIL T., AGE 21. MENTALLY 8.
CASE 10, ISAAC Q., AGE 16. MENTALLY 10.
CASE 10, PRUDENCE Q., AGE 17. MENTALLY 3.

Vineland, N.J.
July 6, 1908.

Professor Johnstone
Monday eve
Dear sir

"I have been noticing for the pass year and some months that a very direct attention has been paying to me, that is people sneaking around and watching me when they though that I did not know it, and I have herd some funny tails said about me which I have not liked but I did not pay much attention to it, but for the pass 5 or 6 months those tails have switch of from small funny tails to large dirty slurs, and I have expected —"

"Of corse I cant stop here to tell you all of my thoughts of this truble that has been going on for years for it will take to long for me to write it, but if you dont think I am —"

Win also has some capacity for drawing as is seen by the accompanying sketch. He can weave a very nice basket after his own design, both in form and color. He could also do quite a little independent woodwork and make some very nice articles.

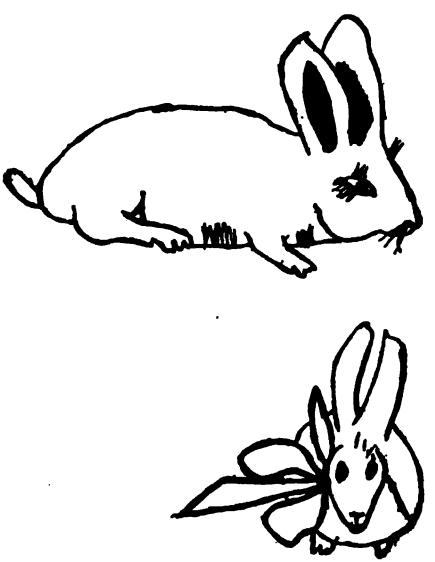

While Wil is inferior to his brother he is by no means a low grade defective. Upon admission he was found to have imperfect speech — his voice was somewhat thick; but he could help himself, had good memory, could do

errands, was obstinate— as he is still inclined to be. Like his brother, Wil is musical and plays cymbals in the first band, the bass drum in the second; likes the band. He writes a fairly good letter with little help. Wil can read by spelling out the words rather slowly and can sometimes make out the entire sentence. He writes a rather childish hand but perfectly legible and fairly well put together, as the following illustration will indicate.

Vineland, N J T S
Nov, 14 1911

My dear Santa Claus
Please give me these few things such as one pair of corduroyed pants blue cap size 6⅞ white coat sweater.
This is all I want for Xmas this time
I will close now by wishing you a Merry Xmas and a Happy New Year.

From your loving friend,
Wil T.

He is really capable of doing a great many kinds of work and of doing them very well. It is his very peculiar temperament or disposition that prevents him from being a valuable Institution helper. He is sober, inclined to be morose, stubborn, backward, obstinate, restless, excitable, sensitive, and very quick tempered. When things do not go to suit him he falls into a violent temper and uses strong language and may be destructive. He is very noisy and childish in his conversation, full of curiosity, quite mischievous at times, and plays with toys like a small child. Outside of the Institution he would be practically helpless because he would not be understood and people would not tolerate him. He would get into endless trouble through his tendency to become violently angry. He has no control, and makes no attempt to control himself on these occasions. There is nothing especially peculiar about his Binet test; he cannot remember five figures but can arrange the weights, which is a

higher test. He never knows the date but can name the months in order. His definitions are no better than by use; has learned to count stamps since his first test.

Turning now to the family history we see again that there is abundant reason for these defective children. The mother was feeble-minded, belonging to a feeble-minded family. She was a sexual pervert of the lowest type. The father of Win and Wil was a normal man, belonging to a thoroughly respectable and high grade family, but he himself was a degenerate. Circumstances prevented his being carefully brought up and he acquired bad habits and went from bad to worse until he became a sexually immoral, alcoholic and thoroughly bad, man. Apparently the respectable traditions of his family have led him to prefer to live in wedlock rather than otherwise, and he has accordingly married four different women, but this has not prevented his living with those to whom he was not married. His first wife was a normal woman and is reported to have had two normal children. On the other hand he is believed by many to be the father of one of the children that appears on Chart 118.

The sister of the mother of Win and Wil married a feeble-minded man and had a family of feeble-minded children which appears in chart 21.

**CASE 10. ISAAC AND PRUDENCE Q.** Brother and Sister. American born of American parents. Isaac is 16 years old. Mentality 10. Had measles, spasms — at the age of two, scarlet fever, whooping cough at the age of seven. Prudence is 17 years old. Mentality 3. Had spasms at two. Isaac has been here seven years. Prudence eleven.

A remarkably interesting thing in connection with these two children is the very great difference in their intelligence. Prudence is a low grade imbecile. When admitted at the age of six she could go up and down stairs rather poorly, could not help herself, did not know color or form, was excitable, very nervous, laughed without cause. After five years' training

she could string beads by form and by color; could not name color, could sew on a button without help. Two years later it is recorded she could weave a mat and thread her own needle. Her attendant reports that there has been a marked improvement in her since she came to womanhood. She has been very helpful around the cottage with the younger children; works in the clothes room, can sew on buttons and be generally quite helpful; knows her brother and is very fond of him or perhaps

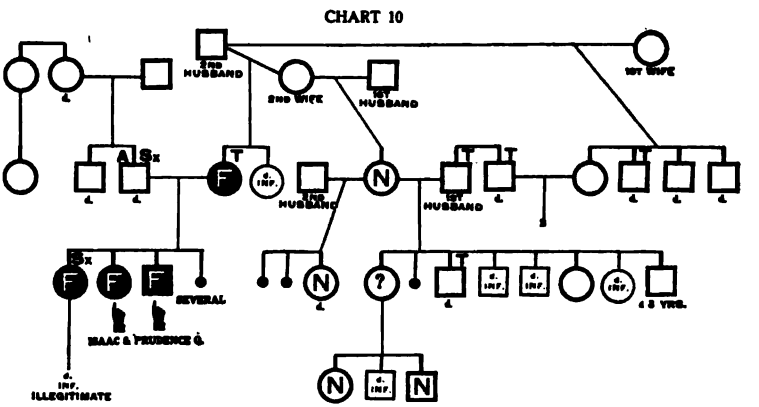


admires his superior intelligence. She gets quite excited when he comes near.

Isaac, on the other hand, is a high grade moron, a fine looking boy; has made great improvement since coming here. On admission at the age of nine he is reported to have had a large head, open mouth, unsteady gaze; was heedless, active, obstinate; memory and attention poor. He had been in kindergarten a year and had learned to count and tell color. In the seven years he has learned to do about what the high grade defectives usually do. He can write a very fair letter as the following to Santa Claus shows: —

Vineland, N.J.
Nov. 13, 1911.

My dear Kris Kingle
I wish to have a pair of rabbits
with long ears I will be glad to have them and
a pair of kid gloves and a box of chocolates
I wish to have these things that ask for
if you plase get these.
I wish you
A Merry
christmas
from
Isaac Q.

The penmanship of this letter is very fair, much better than any that we have yet quoted. The letters are well formed and the whole has quite the appearance of a normal boy's letter. He can do quite extensive combinations in the four fundamental rules of Arithmetic and some simple problems. He can read fairly well though it is doubtful if sufficiently well to get satisfaction from reading by himself. Industrially he has done very well; does good woodwork; can make nice baskets and will ultimately be a valuable Institution worker. He is musical also, and plays cornet in the second band.

One notes especially in his case what can be seen in all the high grade cases, the point at which they begin to fail in their English work and improve in the industrial. For example, here are two entries, one when Isaac was eleven years old and the next when he was fourteen. At eleven it says — "has improved steadily in English and number work; does very good work in wood carving; plays first cornet in second band." At the age of fourteen the record reads — "in wood carving does good work, in basketry also; English, does not try real hard; nature class, does not try his best; physical culture — is very troublesome at times." The interpretation of which is, that he has reached his limit in the number work and nature study, consequently takes

no more interest and does not try, while in the industrial work he is beginning to achieve something and work more faithfully than ever. This is a lesson which the pedagogues would do well to heed.

His skill with the pencil is shown by the following drawing which he made in response to the request to draw something.

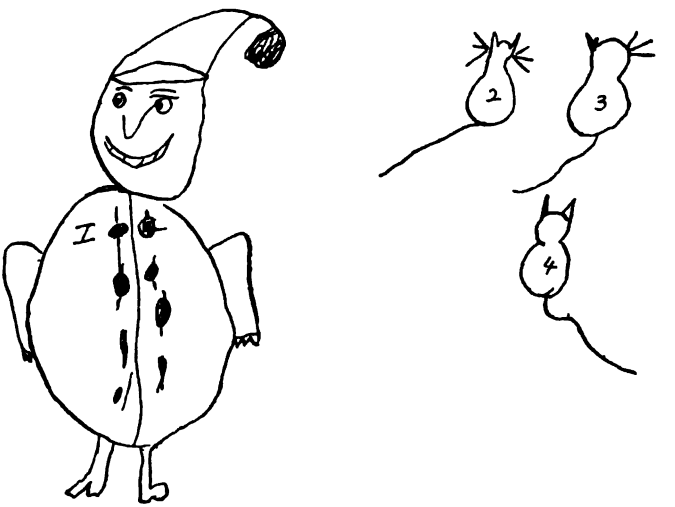


He said the first was Santa Claus, the others are cats. He learns very quickly and as a rule does not need close supervision. He is not fond of his sister and pays very little attention to her. Perhaps the following quotation from the report of the band master shows his condition now as well as anything.

> "Good progress in music and decided change for the better in conduct. Does not let his temper get the upper hand now so frequently and is more respectful. Tries occasionally, but not always, to do his best. Might take more interest in his practice, but on the whole deserves credit for his quiet good example at second band practice."

A glance at the family chart is enough to account for the condition of these children. There is another branch of the family where there were many that died young, but as we were unable to determine anything of the mentality, we have not reproduced it.

The chart here shown is another instance of a feeble-minded woman with a husband who is alcoholic and the offspring either feeble-minded or miscarriages. The exact number of miscarriages in this case is not known, but it is reported that there were several.

In the case of these two children, Prudence is not dangerous. She is so low grade that there is hardly any likelihood of her ever marrying, although she might be victimized by some evilly disposed man.

Isaac, however, is exceedingly dangerous. He is a potential criminal or bad man, or under the best conditions would at least marry and probably become the father of defectives like himself.

The following interesting bit of reasoning comes from Isaac. He says — "People say one must be able to read and write in order to get along in the world. Now there is Miss ——. She cannot read or write, yet she gets along all right."

CASE 11. **MAMIE C.** 24 years old. Mentality 10. Has been here 17 years. American born; nationality of parents unknown.

Mamie is a splendid illustration of the high grade moron type; she comes the nearest to proving the environment theory of any pupil in the school. In fact, she proves the opposite and probably is a good illustration of what would always be found if such cases were carefully scrutinized. Mamie came to Vineland when she was a little under seven years of age; she was small with a large head, lisped, knew the alphabet, could count to four, knew color; memory was said to be poor, attention poor. She had been in school six months and made some improvement; after admission she was at once placed in the kindergarten and in course

of a year had made marked improvement. Her attention and memory are now reported as good. She takes an active part in games and speaks pieces. A year later it is recorded that she has made much progress, reads from the chart, can do simple arithmetic; two years more, — reads and spells four-letter words, counts from twenty to one, speaks more distinctly; shows a desire to learn; counts to one hundred by twos; works

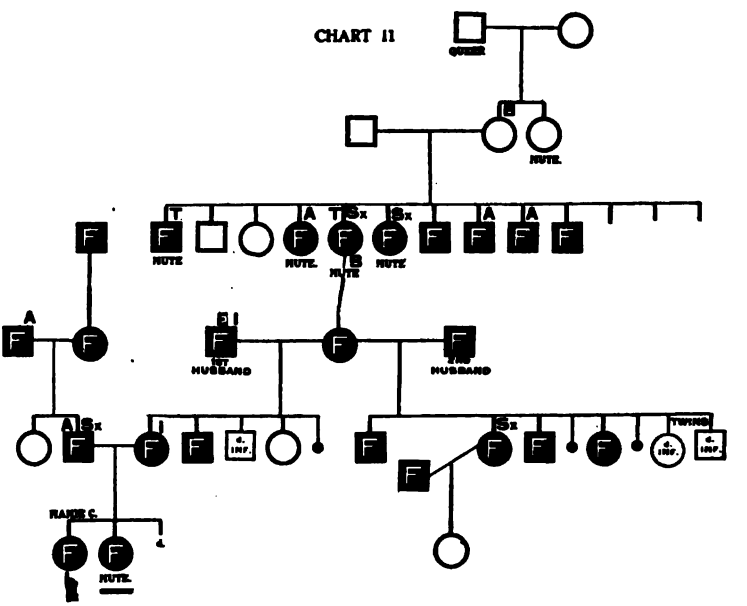


nicely, is quiet and obedient; has commenced First Reader, takes part in dialogue; can hem and back stitch. The next year she has become a helper in the kindergarten, doing well in English and is learning music. At the age of fourteen she writes well, does short division, knows her multiplication tables, is a little weak in spelling, plays well on the tenor horn, is very helpful in the kindergarten, is patient and always kind. Not only has she improved along all these lines but she has conquered a somewhat unpleasant disposition. To-day she is a quiet, attractive

pleasant girl, very efficient, needs very little supervision, a very valuable helper in the kindergarten, leading the children in many ways and relieving the teacher of much work; besides that she takes all the care of the rooms of the assistant Superintendent and his wife. Can do any kind of housework and does good woodwork; has only a slight defect in speech at present; she is truthful and trustworthy, proud of her good record and has rather a strong ambition to be like the teacher whom she admires.

The following letter written by herself to one of her former attendants will illustrate what she is doing and how she does it, as well as her ability in letter-writing.

Vineland, N.J.
March 26, 1911.

My dear Mrs. S

I guess you think I don't know such a lady as Mrs. S any more, but although I don't write to you I often think of you, and about the time when you were here as one of our teachers.

I will never forget you because you help to make makes me the girl I am to-day.

For a long while I did not write any letters at all because I had such a lot of trouble with my head and eyes, but I had my eyes tested and have glasses and now I feel like a new girl, and feel more letter writing.

I still go to School. In the morning I help in the kindergarten from nine to eleven oclock from eleven to twelve I go to reed and raphia class I have made four different kind a sewing bags out of raphia and lined them with different colored silks.

In the afternoon I go to the sewing class, english, and wood carving class.

I am making a embroidered mit in the sewing class and in the wood carving class I am making a silver chest, and I still take piano lessions, and I am still in the band

Miss M — our reed and raphia teacher give piano lessions. She gives me a lession ever Tuesday morning.

We have a fine band director his name is Mr. K — He had a band concert not long ago. The first band played five selections the second band two pieces and we have now a girls band. It started last summer and they played a piece and a lot of solos.

I play the trombone in the girls band and the baritone in the first band.

Last Friday night the Baptist minister gave us a entertainment,

It was slight hand, and it was fine. We had store day here on St. Patrick day. My reports were all good.

I got thirty cents in my envelope, but I put in towards my gold frames glasses I am saving a dollar and Mrs. N is going to give the rest to me which is very nice.

Spring is here, and it seems real nice to see the pretty flowers and to hear and see the buds.

With lots of love from Maude, and Emma, and myself,

Write when you can I am your true friend

MAMIE C.

Her penmanship is very neat and, while a little angular and childish, is nevertheless perhaps the best that we have among our children. She can play the piano and plays a horn excellently in the band; the band-master commends her "for steady, patient, progressive work and applying her knowledge; trustworthy and willing to help the other girls; would be exemplary in everything if she were a little more careful of instruments at times"; and another teacher says "always willing to help with the little girls, very good and kind with them."

Now all of this shows that Mamie has made great improvement; she has had the best of care and training and it cannot be said

that she would have made even more if she had not been in an Institution — that she has been institutionalized; on the contrary she has been given great freedom and responsibility, she has had every opportunity and encouragement to improve and there has been developed in her a strong ambition to be like one of her teachers. Her progress has been great and has undoubtedly been about all that she could possibly make, and yet she is mentally defective; not at all able to take her place in the world and compete on equal terms with others in the struggle for existence. Environment has done much for her but it has not made her normal and no environment could.

Her family chart shows the reason. The argument for environment is that it has made her a happy, useful and honest girl. A different environment would have made her the opposite, perhaps a criminal, perhaps a prostitute, undoubtedly a wife, and mother of defectives working hard to maintain a miserable existence struggling against odds that were too great for her.

Mamie is a living and brilliant argument for the colonization of all the children of defective ancestors. They need permanent segregation, to the end that that kind of defective human stock may cease to perpetuate itself.

**CASE 12. KARL I.** 23 years old. Mentality 10. Has been here 3 years. American born, of American parents. Had spasms at six months and was paralyzed; measles at seven years, diphtheria at eleven years, membranous croup at three years. Has had typhoid fever. Assigned cause "premature birth and mother's condition."

This is a case of a high grade boy who spent three years here and then left to go to work. He had been highly trained industrially and being of a relatively high mentality has been able to maintain himself. He, however, came back voluntarily at one time and stayed a little while but afterward went away again and is at present earning his own living. He has no noticeable stigmata of degeneration and would pass as an illiterate workman, capable of earning the lowest wages. He is of average height

and is well built and strong. He was an eight months' child, eyes are weak and he has sore ears, the result of a gathering in the head. He is said to have had congestion of the brain when a baby.

Karl's mother is a normal woman but clearly in bad physical condition. She has had twelve miscarriages said to be due to a lacerated uterus. Of two earlier children, one was an eight months' baby that died on the second day and the other died the eighth week; the third born died at three years and the second

CHART 12

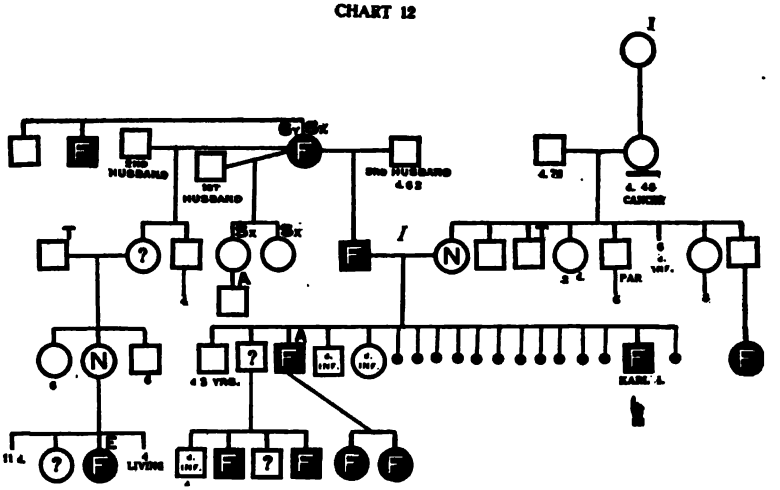

born was feeble-minded and alcoholic and is the father of two feeble-minded children. Of the first born, the condition is undetermined but he had two feeble-minded children, a third is perhaps defective, four others died in infancy.

The mental defect has clearly come through the father's side. He himself was a defective and his mother was feeble-minded and sexually immoral and syphilitic. She had a brother who was also defective. From another marriage this woman had a great grandchild who was feeble-minded and epileptic.

This is a very instructive case since a superficial knowledge of

the family would lead us to conclude that the premature birth or the condition of the mother was the cause of the defect, but a deeper study shows without doubt that there was hereditary feeble-mindedness in the father.

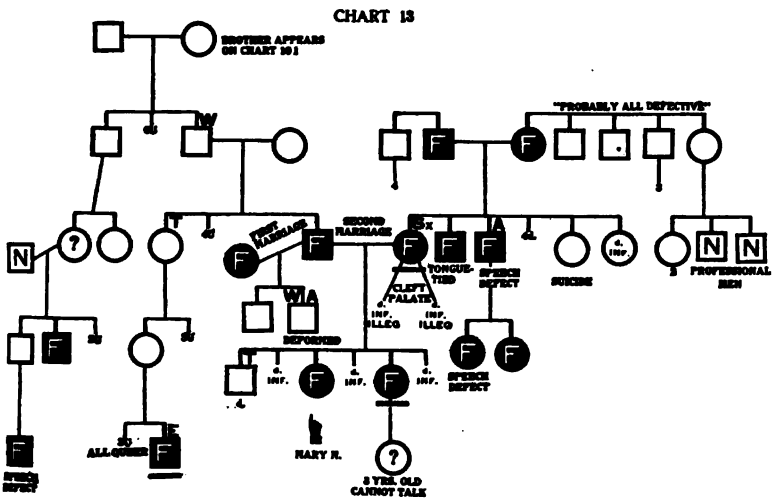


**CASE 13. MARY N.** 26 years old. Mentality 10. Has been here 19 years. American born, of American parents. Had spasms at two months, and whooping-cough.

Mary came at the age of seven. At that time it is recorded that she was like the usual child of five or six; could dress herself with help, talked indistinctly. It was said that "surroundings have not been favorable as her father and mother were a little weak-minded." She made excellent progress at first and must have appeared quite normal. It is recorded that she was at the head of the class in number work, could read twelve pages in the beginners' reader, danced well, did well in English work. This was at the age of eight. Next year she was reading in the Third Reader, could add, subtract and multiply, write a fair letter but spelled poorly. At the age of eleven, two years later, it is reported "plays well, takes part in almost all of

our entertainments, counts but does not know numbers, only the number names; reads poorly in the Second Reader." A year later "needs help in spelling, adds and subtracts well, absent-minded and careless at times." The next year "grows disobedient, does good house work without giving trouble." Next year, at the age of fourteen, "works in the kitchen and does very well in dressmaking." The last record of her in usual school work is — "can compose a nice story in English but her spelling is very poor."

Mary's case is worthy of much study since her unusually high mentality of ten years brings her up to the division of those girls who are not usually recognized as defective, and who because of that are a menace to society. She is cheerful, active and obedient, very quiet and affectionate, willing and tries, is truthful, but quick-tempered; is a very attractive girl, well behaved and lady-like and very capable in household work but always under supervision.

The following school letters will help one to appreciate better what is Mary's mental achievement.

Vineland N.J.
Oct 7, 1910

My Dear Sister
I thought as I have a few minets I would write you a few lines.
Have you received the dress that I sent you for M —— I do not know why you do not let me know if you got it or not. If you would let me know I would feel better satisfide about it.
I suppose you do not have much time to write.
I was to wildwood for two weeks I went in bathing every day expeat Sunday I had a very pleasent time. Autum is here and some of the trees are truning they will soon all look very pretty. I will bring my letter tc a close write soon with love your sister. Anser soon

CASE 13, MARY N., AGE 26. MENTALLY 10.
CASE 11 (centre), MAMIE C., AGE 24. MENTALLY 10.
CASE 16, BENNIE B., AGE 18. MENTALLY 9.

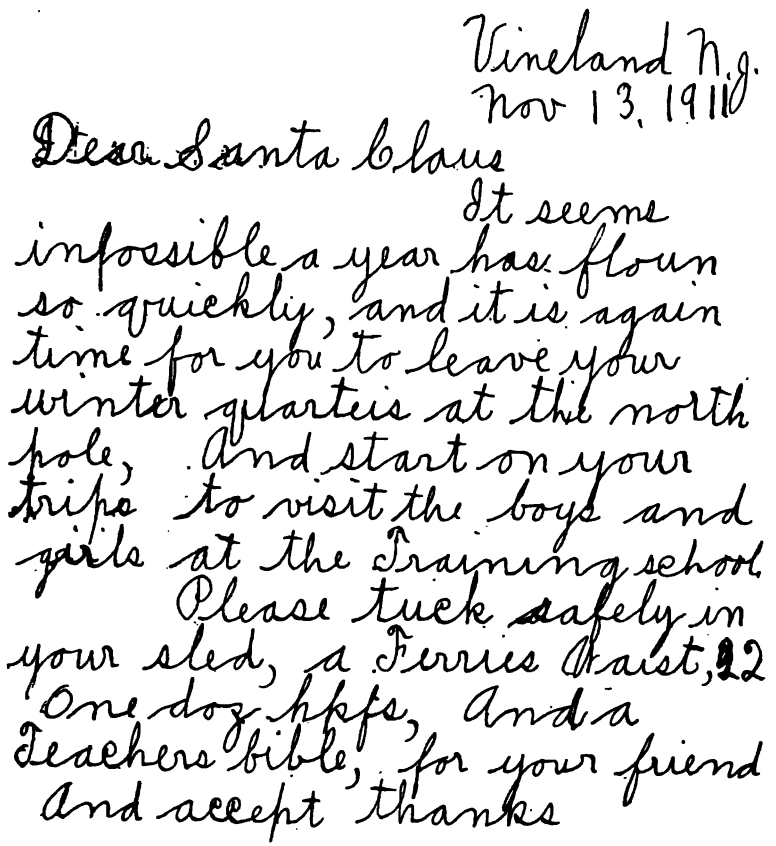

Vineland N.J.
Nov 13. 1911

Dear Santa Claus

It seems impossible a year has flown so quickly, and it is again time for you to leave your winter quarters at the north pole, And start on your trips to visit the boys and girls at the Training school.

Please tuck safely in your sled, a Ferries Waist, 22 One doz hkfs, And a Teachers bible, for your friend And accept thanks

It should be remembered that she is twenty-four years old when she writes the first one, and a year older when she writes the one that is reproduced in facsimile, and that for the greater part of sixteen years she has had more or less instruction in letter writing. Mary is a splendid illustration of that type of girl that is most dangerous in society. Pretty and attractive and with just enough training to enable her to make a fair appearance she deceives the very elect as to her capacity. Responsibilities would be placed upon her which she could never carry. She

is absolutely incapable of controlling her own instincts and impulses, and incapable of exercising any judgment in matters that are at all complex. In Institution life she is happy and useful. Unprotected she would be degraded, degenerate and the mother of defectives.

Looking at her picture one finds it hard to believe this, but a glance at the family chart ought to be sufficient. There is not a single individual on the whole chart that we could mark normal except one man who has been foolish enough to marry into this defective and degenerate family, and two maternal second cousins of Mary's who are professional men. A number of the family have been in Institutions at public expense.

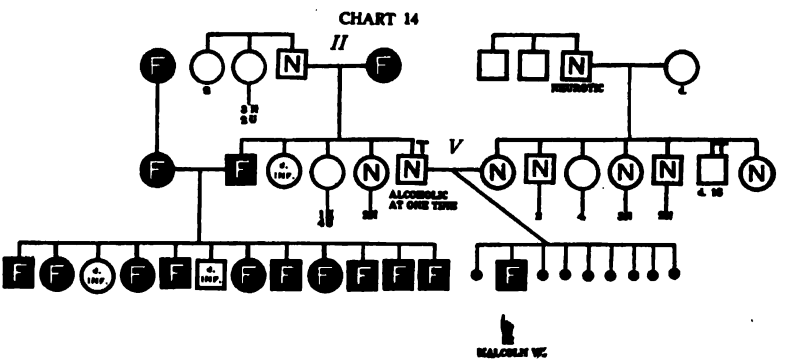


**CASE 14. MALCOLM W.** 22 years old. Mentality 10. Has been here 3 years. American born, of American parents. Had convulsions at four months, whooping-cough at four years, measles at seven, scarlet fever at nine. Has had pneumonia. Illness is given as the cause of the condition.

Malcolm is a typical moron; learned to talk at the age of five; has slightly defective speech. He came here when he was nineteen years old; has learned to be generally useful about the barn and the cottage; works fairly well; conduct is good; has charge of the barn when the barn man is absent. At times he is careless. He can read and write a little, but his spelling is bad; he evidently has not been trained to do as much as he might have

done, and yet he is quite as happy and quite as useful as he would have been had time been put upon this phase of his education. The following short letter is representative of Malcolm.

Vineland, N.J.
Aple 29, 1910

Dear Mother
I hope you got home save I wood like to have gorne with you.
We have a new boy and look to be a nice won. I wood like to com hom on my birthday it is not fare of We had som moveing picture on Wesday and thay were pretty.
With time did you get back home it mich of been late?
from your Loving son
Malcolm

The family history is a most interesting one. Malcolm is the only living child of his parents, although there have been nine conceptions. The rest resulted in miscarriages or stillbirths. The mother is a normal woman and seemingly of a normal family; the father is also a normal man but evidently a carrier of defect, since his mother was feeble-minded. He was alcoholic and went with a fast set, which undoubtedly accounts for the miscarriages. To confirm our theory that the father must have been a carrier of feeble-mindedness we have only to look at an older brother who is feeble-minded and married a feeble-minded woman. They had twelve children of whom two died in infancy and all the rest were feeble-minded. There is no doubt that Malcolm has inherited this defect thru his paternal grandmother.

CASE 15. DEBORAH KALLIKAK. 24 years old. Mentality 10. Has been here 16 years. American born of American parents. Had chicken pox at 11. Illegitimate; born in almshouse.

Deborah's story and chart have been published. See The Kallikak Family, Macmillan, 1912. They are not reproduced here, but the figures have been counted in our tables of statistics.

CHART 16

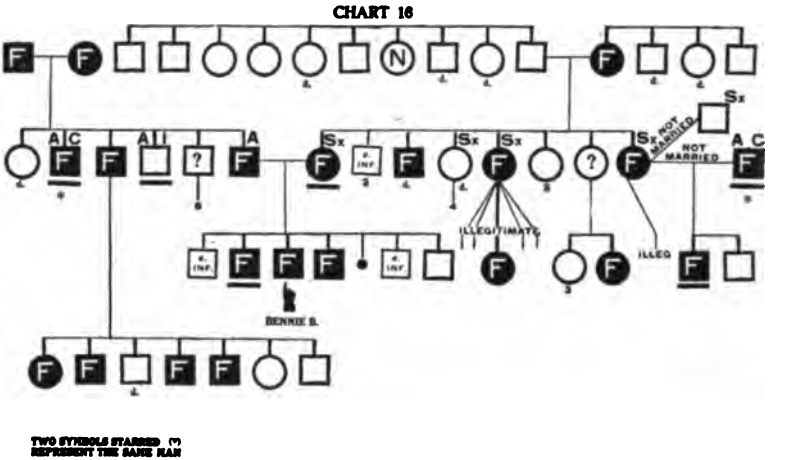


TWO SYMBOLS STARRED (*) REPRESENT THE SAME MAN

**CASE 16. BENNIE B.** 18 years old. Mentality 9. Has been here 8 years. American born; nationality of parents unknown.

Bennie has gone through about the usual course for children of his mentality; in eight years he has learned to count a little, and manipulate figures, learned to read a little, and write a simple childish story; his penmanship is very bad, also his figures, and papers slovenly looking. He learned to read in about the Second Reader and not better; on the industrial side he has steadily improved and can make nice baskets and do good work in the woodworking room; improved greatly in the cottage work; dusts, sweeps, makes beds, darns stockings; does good work in the pantry.

"He is not doing so well in mending as a year ago." This undoubtedly means that he is getting bigger and older and has lost his interest in mending; perhaps he feels that it is not a boy's job and so takes less interest and does it less well. With these children it is always a question of instinctive interest; we cannot rely upon their doing things to any great extent from any associated interest, consequently the efficiency with

which they work in any given line depends on how much they enjoy it and how much they are interested in it.

Bennie is generally truthful and trustworthy, he is somewhat sober and even moody and morose at times; a little inclined to be quarrelsome, but on the whole is a very good boy and not difficult to get along with.

Bennie's family chart shows an unusually bad condition of things, possibly because we have been more than usually fortunate in tracing his people. Bennie is one of seven children; the father and mother were both feeble-minded and belonged to feeble-minded families. It will be noticed that these parents have defective brothers and sisters and the father is in turn the child of two feeble-minded parents, while the mother's mother is also feeble-minded.

Of the collateral branches we have been able to determine very little, except the number of individuals in each family with now and then one so defective that his condition is easily remembered. A very marked feature illustrated here is the way in which defective groups get together and marry among themselves.

In this family we have twenty feeble-minded individuals and probably a great many more if we knew the facts. In spite of all that, this boy had to be dismissed from the Training School, is now at large and will almost certainly continue the race of defectives to which he himself belongs.

CASE 17. **THOMAS** C. About 20 years old. Mentality 9. Has been here 10 years. American born; nationality of parents unknown. The assigned cause " sickness of the mother."

Thomas's exact age is not known, he was supposed to be about ten years old when admitted. He could do housework and errands, had bad habits, could count to a hundred, could add and subtract a little; knew color and form. The first and second fingers of his hands and his toes are webbed; he stutters a little.

He has made considerable improvement of the usual kind; has learned to read in the Second Reader and adds and subtracts a little; this is about the limit of his book work. Industrially he has become quite a worker, especially around the farm and dairy. The dairyman reports: "He is always willing, always on the go; does his work carefully and we could not do without him." He is cheerful, good natured, mischievous, rather quick tempered, inclined to be thieving, sometimes obstinate and quarrelsome. On the whole, however, he is a very good Institution helper.

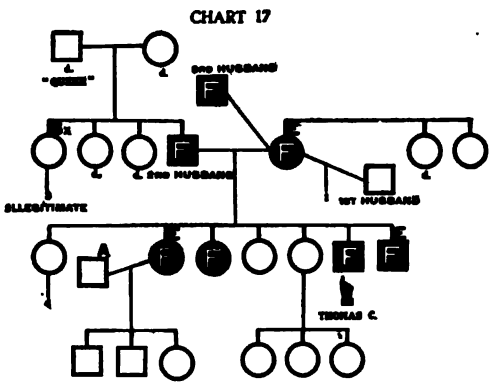


We have not been able to discover much about his family, but a few members have been located and they are nearly all feeble-minded. Two brothers and his mother are epileptic. He himself has never shown any symptoms of this additional defect.

Later study has given a much fuller history. For revised chart see page 39.

CASE 18. NELLIE C. 19 years old. Mentality 9. Has been here 12 years. American born of American parentage.

A high grade child and apparently only a little backward when admitted at the age of six. Understood language and commands, was obedient, could wash dishes and do errands, was fond of play and dolls. She improved steadily. A year and a half later had learned all the first kindergarten work, could count to 39, add combinations to ten, could copy easy sentences and was interested in her work and tried to do it well. She soon

reached her limit in book work, as she has never been able to read better than the Second or Third Reader, knows two or three multiplication tables and can add a little.

In industrial work has steadily improved until she is one of the best girls in the cottage. Is neat, careful, and can do well almost any kind of work. Is to-day a handsome young woman of 19 with the appearance of a girl of 15 and the mentality of a child of 9. She is cheerful, active, but of quiet manner, obedient, affectionate, willing and tries, truthful and trustful, sensitive and good tempered, although sometimes quick tempered.

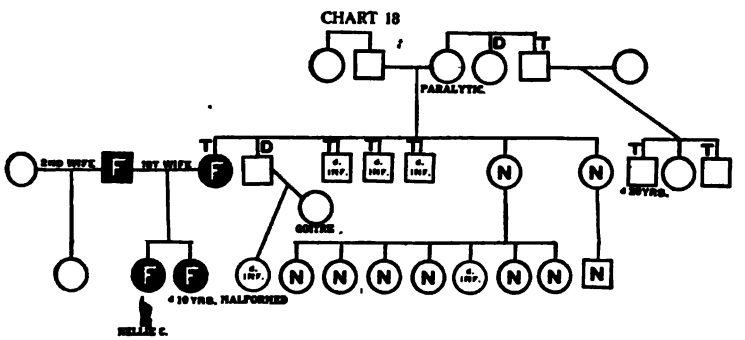


This girl is a striking illustration of the type of woman who, out in the world, becomes quickly victimized because of her quiet, innocent, unresisting manner. Pretty and attractive, she holds the attention of the passerby, is easily captured by the designing rascal and may even attract a man of more intelligence.

Unfortunately, we have not been able to get as full a history of her family as would be desirable. She had a younger sister who, altho she died at ten, was clearly defective. The father and mother are both defective. In the mother's family, however, there are some normal sisters who have had normal families. There is some deafness and considerable tuberculosis on this side of the family.

CHART 19

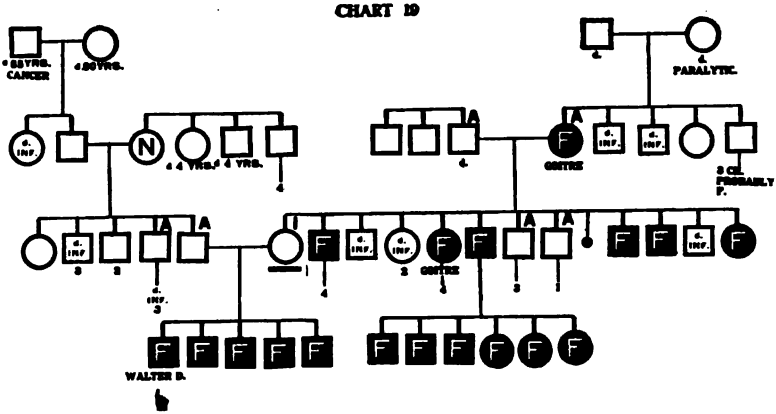


**CASE 19. WALTER D.** 17 years old. Mentality 9. Has been here 4 years. American born of American parents. Had measles at the age of nine. Has had mild chorea.

Walter is a typical moron and when he came there was considerable hope that he might be merely backward but he has not progressed in mentality and has evidently reached his stopping point. He had become unmanageable at home and, although he had been to school several years, had made very little progress. Knew his letters and could count to a hundred and add and subtract a little. Has learned to read fairly well but his written work is poor; has evidently reached his limit in this direction. His manual work is better, he learns basketry readily. He is not truthful; is thieving; is quick-tempered, obstinate and mischievous and a mischief maker. Has very bad habits. He has, however, sufficient intelligence to become a good Institution worker and will undoubtedly settle down to this, under good training; but without such training he would become the most dangerous and vicious boy imaginable. With all his present habits and tendencies he would get into all the trouble and immorality possible. This boy's Wassermann test was very strongly positive.

A glance at the family chart shows an exceedingly bad condi-

tion of things. Walter's four brothers are feeble-minded like himself. Of the father or his family little can be learned, except that there was alcoholism.

Walter's mother was insane and is now in an Insane Hospital. A brother of hers was feeble-minded and had six children all feeble-minded. Walter's maternal grandmother was also feeble-minded and the grandfather alcoholic, as were at least two of their children. Everything indicates an exceedingly low grade, bad family with the defect in at least three generations.

**CASE 20. INEZ H.** 28 years old. Mentality 9. Has been here 14 years.

Was a strong baby; when admitted to the School at the age of fourteen was small for her age, could read some, could add and subtract, wrote poorly; had been to school four years with little progress. She is very morose, rather stubborn and quarrelsome, is excitable and quick tempered. Does some sewing and embroidery, and the usual dormitory work; works in the laundry.

CHART 20

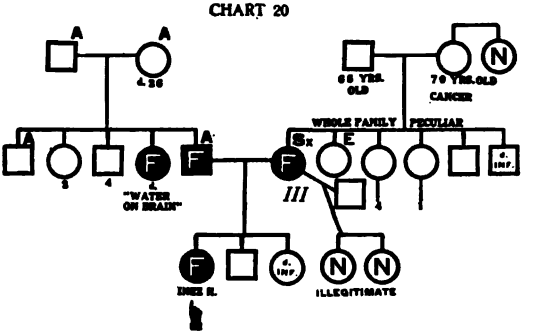


There is no doubt about the hereditary character of this case. Both the mother and father were defective, an aunt was epileptic. The mother's sisters were all called peculiar; whether that meant mental defect could not be determined.

**CASE 21. DAVID H.** 19 years old. Mentality 9. Has been here ten years.

When David was admitted he could dress and undress himself; knew form but not color, could read a little and count to five;

had a large head; mouth open; a speech defect. Under training he improved in every way; he showed a remarkable memory; did very well in the school work. Although David received a great deal of attention and training in speech, he was never able to overcome his defect and always spoke indistinctly, and, although he could produce the elementary sounds, he could never put them together. Every inducement was tried, such as

CHART 21

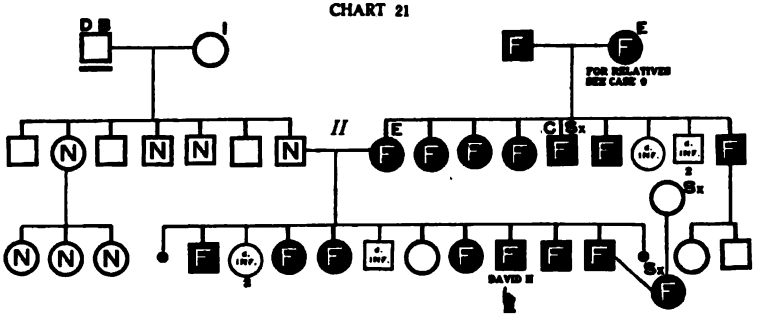


requiring every person in the Institution to refuse to do anything for him or grant his requests unless he spoke distinctly; all was without avail. Of course he could never read orally to any satisfaction. He, however, learned to write, not a very good hand but still quite legibly and quite accurately. Punctuation and capitalization were quite beyond him. The following two letters show this and also the incoherency of his ideas at times.

Professor Johnstone
I would like you to do me a favor I would like
to go to the laundry Tuesdays and Thursday if you
please to learn on the shirt machine this is the first.
The second thing I would like to go to Dr. Goddard three
time a week.
if you put me at these three places I will bee satis-
fied and horse barn.
From
David H.

Dear Mother and Father
I am writing you a
few lines to let
you hear from me
I hope that all of
the folks are well
at home as it leaves
me How is father
coming on this year
with his farm
Has Job been down
to Cedarville yet
this summer
In the next litter
thvill sent you some
pictures when
I fix them up the
Bridgeton high School came
up to play the New Jersey
Training School
today we all
enjoyed the game
very muchr I will
close now Iam your
lowing son DAVID H.

He also made considerable progress in Arithmetic as the following examples will illustrate.

Example — April (19) 1907

$8654 + 3416 - 24 - 36 \div 3 = \text{what?}$

$$
\begin{array}{r}
8654 \\
3416 \\
\hline
12070 \\
-\ 24 \\
\hline
12046 \\
-\ 36 \\
\hline
12010 \\
\hline
3 \mid 12010 \\
\hline
4003\tfrac{1}{3}
\end{array}
$$

Example —

$2 \times 386 + 8346 + 2580 \div 2 = \text{what?}$

$$
\begin{array}{r}
386 \\
\times 3 \\
\hline
1158 \\
+8346 \\
\hline
9504 \\
+2580 \\
\hline
2 \overline{)12084} \\
\hline
6097
\end{array}
$$

Example III

If Cattell Cottage receives twenty quarts of milk each day how many quarts of milk will they use in one week?

If they use 20 quarts in one day they will use $7 \times 20$ qts in one week.

$7 \times 20 = 140$ quarts

His lack of intelligence is shown by the fact that he could not give definitions other than by use, he did not remember six figures, could not arrange the weights in order; could repeat the days of the week and the months of the year; knew the money; could put three words in a sentence; could not see the absurdity in the sentences given; could not define charity, justice or goodness. His definition for charity was — "Can you read out of the Bible?" Justice was a girl's name and another time he said justice was a pain in the stomach. Goodness — is being good. Asked to give a word that rhymed with day, said "Monday," after a careful explanation of what a rhyme is, being asked to give a rhyme with mill, said "Milk."

David is another case of that type which, having been well trained, would be able to earn a living under favorable circumstances, that is to say, if he got into good company with someone who would have some little patience with his shortcomings and treat him, so far as responsibility is concerned, like the ten

year old child which he is mentally. He would pass almost anywhere as a normal boy. Even his speech defect would work to his advantage because it would tend to cover up his further defects. People would come to the conclusion, as so many people do in such cases, that if it were not for his speech defect he would be all right. He is a cheerful, good-natured boy, always pleasant and agreeable, willing to do anything for any one that asks him pleasantly. Yet under close competition he would be absolutely incapable of earning a living.

The family tree is a part of that of Case No. 9, the maternal grandmother of David is the aunt of the twins in that case. David's father has been marked normal because we could not, according to our present information, find any reason for marking him otherwise, although he is a shiftless farmer and it is hard to understand how any normal man would endure such conditions as he lives in. When we look at his family of children we are led again to question the correctness of our diagnosis, for, were he a normal man, we would expect that in so large a family, at least some of the children would be normal. However, we must leave it as it is until more is known about this very difficult and obscure problem of the heredity of the feeble-minded. A forcible reminder, that the conditions which we are portraying are persisting, is found in the fact that since we began the study of this family, the younger brother of David has married a feeble-minded girl already a prostitute and the daughter of a prostitute. Had we known that this was going to happen we could have done nothing, under the existing laws, to prevent it.

**CASE 22. MOSES I.** 27 years old. Mentality 9. Has been here 15 years. American born of American parents. Has right-sided hemiplegia.

Moses is a moron of rather high mentality, handicapped by physical defect. When admitted he was 12 years old,

could read a little, and count, could not add nor write, was inclined to be profane and vulgar in his talk. Made some little progress in reading and counting and knows a little geography, but none of this is of practical value to him. He has some little inventive ability and will accomplish wonders with his one arm, in any direction where he can utilize his talent, but for routine work or anything that is useful, he is not of much account.

The accompanying picture is a reproduction of his plan for a merry-go-round; he actually constructed this and the boys

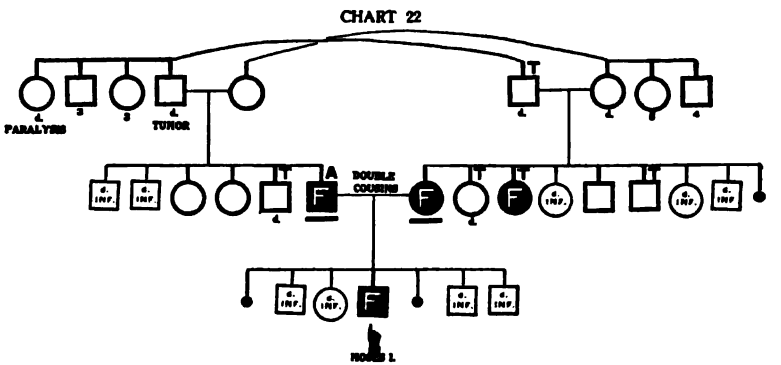


used it for some little time; it of course would not long stand the rough usage it naturally received. The second picture is a photograph of an apparatus which is in actual use and was also constructed by Moses. (See opposite page.)

He is very fond of music and will get hold of something that he can tinkle and play with it by the hour. He is very talkative, generally cheerful, although sometimes quarrelsome. Both his parents are feeble-minded, the father is also alcoholic.

Of the father's family we have been able to determine very little and not much of the mother's except that she has a sister also mentally defective.

This is a curious case of consanguinity, Moses' parents being double first cousins. Moses' condition would usually be at-

tributed to that fact but when we see that they are also feeble-minded, we discover that there is no reason for calling in consanguinity to account for it. Moses and his parents are all public charges.

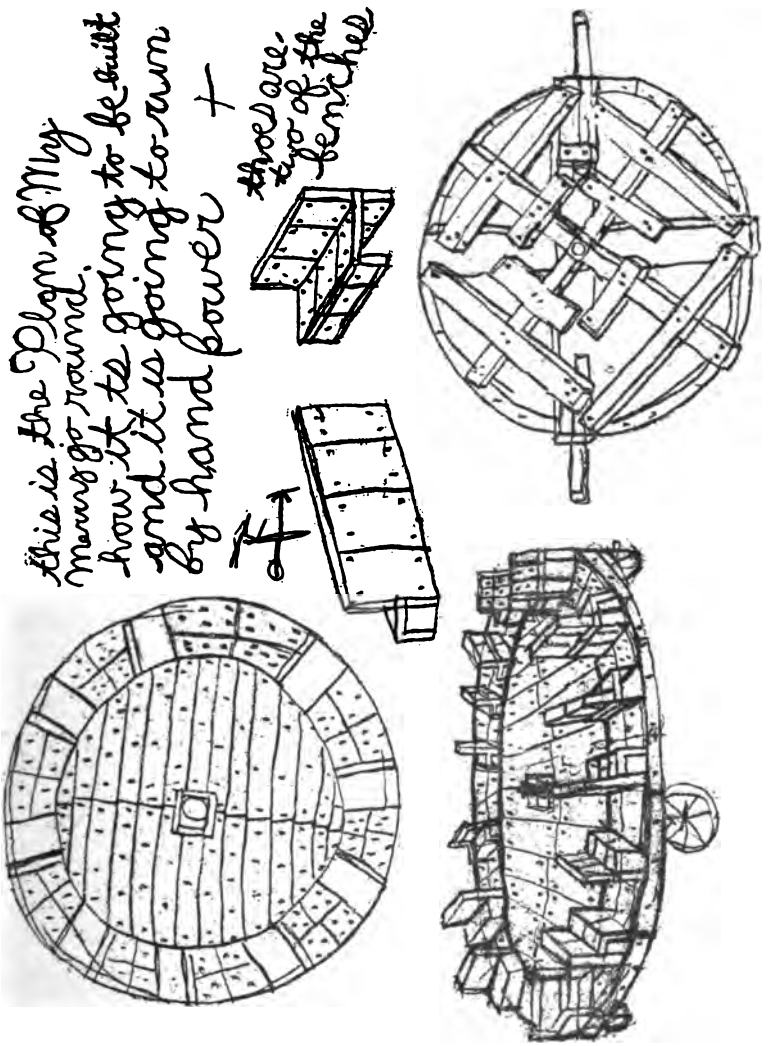

The question will naturally arise; which one of these three is the cause of the condition — the consanguinity, the hemiplegia or the heredity? We can only say that, of the three, heredity is the only one that is known to be sufficient cause for the condition. Rather must we conclude that the hemiplegia has been grafted on to a defective child and while he may be peculiar because of the hemiplegia he would have been feeble-minded anyway. Some one will ask, if a child has such talent as is indicated here, why can he not be trained. Surely under the right kind of treatment this natural ability could have been turned to account! As a matter of fact, however, such is not the case and, I believe, never is the case in this type of child. Moses has been trained and every effort made to make him useful along this line, but like the idiot savant of Earlswood he will work *when* he feels like it and *as* he feels like it and he cannot be trained or induced to do anything different. Such cases are further proof that a person cannot be trained above his mental level. It is ignorance of this fact that leads to so much waste of energy in the attempt to educate mental defectives.

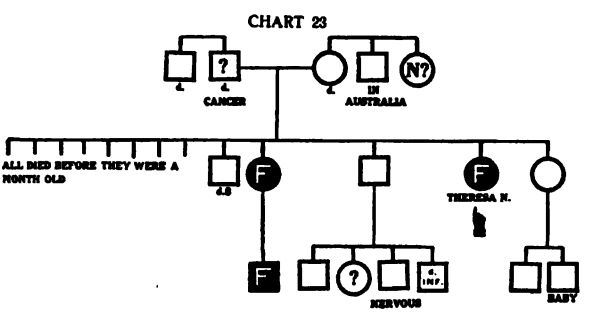


**CASE 23. THERESA N.** 42 years old. Mentality 9. Has been here 25 years. American born of English parents. Has had spasms, measles and whooping-cough.

Theresa is an epileptic and has the usual uneven, cranky disposition characteristic of this disease. Her spasms are violent

CASE 17, THOMAS C., AGE 20. MENTALLY 9.
CASE 23, THERESA N., AGE 42. MENTALLY 9.
Merry-go-round built by MOSES I., CASE 22.
CASE 25., ISADOR O., AGE 25. MENTALLY 9.

but she seems conscious during them. They are more apt to occur in public places than elsewhere, and if kept away from "Assembly" for a long time she has fewer spasms. She is very useful and helpful in the cottages and is very motherly with the little children. She can write a letter and spell most of the words correctly but makes many ridiculous mistakes; capitalizing and punctuation are beyond her.

This is not a high grade family, there are a number that are decidedly questionable as to their mentality and two others at least are distinctly defective, being morons. Altogether it would appear that this is an hereditary case.

CHART 24

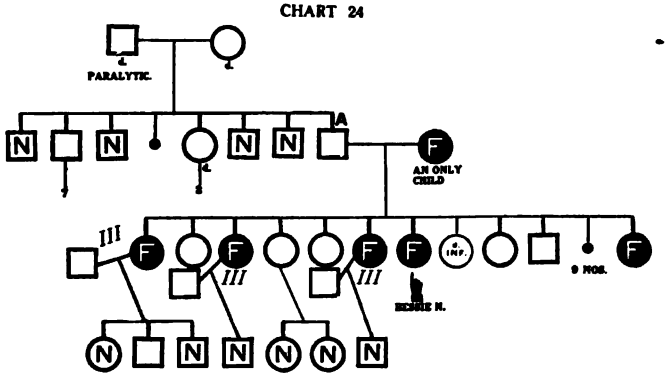


**CASE 24. BESSIE N.** 25 years old. Mentality 9. Has been here 13 years. American born of German parents. Has had measles, whooping-cough, and chicken-pox. Has had spasms since she was eighteen months old and has always continued to be epileptic.

When admitted at the age of twelve could do the four fundamental operations of arithmetic, could read a little, could do an errand. Was rather cruel to small children, obstinate, and noisy. Had been to school two years and made little progress. To-day she is a rather silly talkative girl, can read some, but writes very poorly; can sing. Works about the house very well, scrubs floors, darns; is very slow. Bessie is one of a family

of twelve, at least five of whom are feeble-minded, the others we have not been able to determine with the exception of one that was still-born and one that died in infancy.

The mother is feeble-minded and an only child. The father is alcoholic; mental condition unknown.

CHART 25

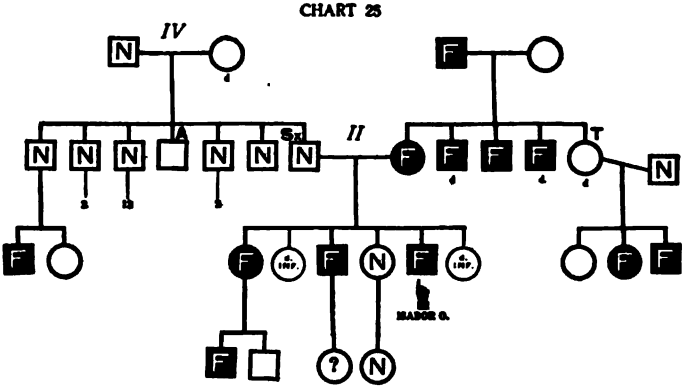


**CASE 25. ISADOR O.** Age about 25 years. Mentality 9. Has been here 10 years.

This is a typical case of that great group which is socially so dangerous. Of relatively high grade, a fine looking young man, without any noticeable stigmata of degeneration, he is able to make the best appearance that his mentality will permit. Very probably able to make his own living, now that he is trained. When admitted at about the age of 12 (his actual birthday is unknown), he could read and count, knew color and form, could do errands and housework. Was obstinate, but easily managed. Steadily improved under training until he was able to do something in a good many lines, although nearly always limited in his achievements. His greatest lack was that of persistent will-power. Was cheerful, active, obedient, affectionate and truthful. Could do excellent work in the tailor shop, was quite an efficient assistant to the electrician, did some work in the car-

penter shop, was an excellent milking boy and was good at housework. He could write a very fair story of some experience, could read well in about the Fourth Reader. Never got far in arithmetic but in industrial lines, as indicated, was very good. Had some little ability in drawing as is shown by the accompanying reproduction. He even assisted the teachers in school, by taking charge of a little group of children. He was especially good at this in the school gardens. He could keep at work a group

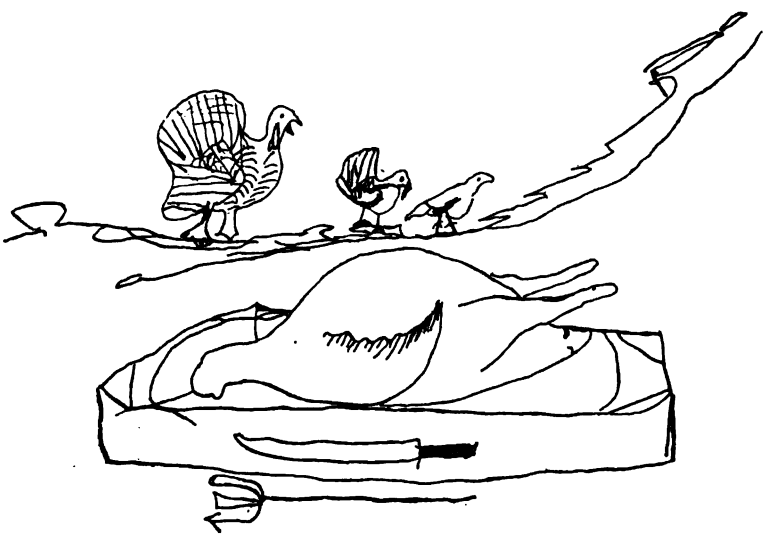

Original drawing by Isador.

of boys younger than himself, with remarkable ability. Perhaps his greatest ability, as it was his greatest interest, was in music. When he came, he was able to play part of the scale on the slide trombone, but had forgotten the positions. He learned the scale in about two weeks and also the bass part to "America." He steadily improved in music and came to play his part, first tenor, in the march "Onward, Christian Soldiers" and other pieces of about the same difficulty.

He remembered ten pictures out of a card of thirteen pictures shown to him for thirty seconds. Asked for the difference between paper and cloth, said "paper is paper" and "cloth is cloth." When the question was repeated, he said "paper is easier to tear." Asked the difference between a butterfly and a fly, said "A butterfly has big wings, a fly has small." Said "Wood is more useful for building than glass." He could remember seven figures. Had some difficulty with rhymes, but could occasionally make one or two. As a rhyme with dim, said "sim." Could give no more. With feet; seat, deep. Could not get another. With spring; "sing," "thing," "tang." With money; "honey," "funny," "dunny," "dinner."

The following description of his work in basketry is typical. "He is inclined to get very careless. He started a small basket using the Indian stitch and did it nicely at the beginning but his interest gave out very soon. I find the same thing whenever he weaves a basket."

He was always cheerful, never quarrelsome, was active and obedient, affectionate, truthful, good tempered, not destructive; was rather mischievous. It would take him hours to learn four lines and he would forget it rather quickly unless constantly used. This boy ran away, some time since, and his whereabouts are now unknown. It is safe to say that if he gets into trouble no judge or jury is likely to believe that he is not thoroly responsible for anything that he may do. No one but experts in the field of feeble-mindedness would suspect anything wrong with him. He is the kind of case that makes the skeptic believe that the Binet tests are absolutely wrong, but ten years' experience with him in the Institution proves beyond the shadow of a doubt, that he is as truly mentally defective as any boy in the School. He will undoubtedly marry or become a father and the consequences are easily guessed by reference to the chart.

Here we see, on his mother's side, a thoroly defective family,

while on the father's side, altho there are a number of normals, there is at least something wrong since a cousin is feeble-minded, and Isador's father altho normal, was sexually immoral; but the boy is by no means an exception in our Institution for the feeble-minded, while among the boys on the street his plight is only too common. It is the great problem before us to-day, to learn to recognize this high grade type of pleasant, agreeable and seemingly normal boys, who, nevertheless, are so defective as to be irresponsible for their acts.

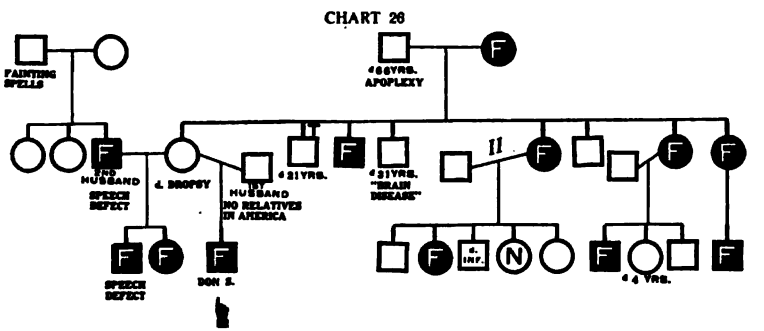


**CASE 26. DON S.** 18 years old. Mentality 9. Has been here 6 years. American born, father German, mother American. Had convulsions at the age of three, measles at eight. Assigned cause "struck with a baseball bat when six years old."

This is a typical case of the good natured dull boy, found so often in the public schools, whom the teacher is so loath to give up as defective.

When Don came he had been in public school four and a half years; he knew about half of his alphabet and could count to twenty; could write and draw a little, could recognize color but not form. Was heedless of danger; dangerous about fire; sly and obstinate. After six years he has gained a little in his school work, doing about what we usually find for those of the mentality of nine. He can read fairly well, can write a very fair story,

can make some number combinations and has a little talent for drawing, makes quite fair pictures. He is much interested in nature work and will observe and draw. All of this, however, falls short of the practical and he will never make any great use of his ability along these lines. He is already turning toward the industrial arts. He has done well in woodwork and now can do some carpentry work under the direction of the carpenter, and will become an excellent Institution helper in various lines.

He is cheerful, active and obedient, very affectionate, willing and faithful, and generally liked by all with whom he works. He is a very attractive looking boy of about normal stature.

There is no mistaking the hereditary character of the condition when we look at the family chart, although, the father and mother both being dead, it is impossible to determine their mentality; but there is so much defect in the family that there cannot be serious doubt that the mother, at least, was defective. This is somewhat heightened in probability, by the fact that she married a second time and had two defective children. Her second husband was feeble-minded also, still if she had been normal it is likely that one of the two children would have been normal.

A number of Don's cousins are making trouble for the public school teachers, as he did. Of one it is said, "tries his best but can't learn." Of another, "he is in the first grade at eight years." Another is in the second grade at eleven years. Don's half brother has a serious speech defect.

**CASE 27. DONALD U.** 25 years old. Mentality 9. Has been here 13 years. American born; nationality of parents unknown.

When admitted at the age of twelve he was large for his age, stoop shouldered, could not talk plainly but knew his alphabet and could read in the Second Reader; could add and subtract, multiply by one figure and do housework. He improved in reading and learned his table of eight and did some short divi-

sion; learned to read and write numbers up to the thousands; knew the important things about New Jersey products; managed, eventually, to get as far as the Third Reader but that seemed to be his limit and since then he has been working on the farm and he is now doing exceptionally well; he drives a team of horses, ploughs and does other farm work very satisfactorily.

He is cheerful and obedient, truthful, good tempered, generally liked by all who have anything to do with him. He has been well trained here at the School and under supervision does excellent work on the farm.

He is the child of a feeble-minded prostitute, who died of syphilitic infection. She had another child, a girl, who was feeble-minded, and then twins who died in infancy of syphilis. Little else is known of this family. A man of the same name has been found who has a similar history but whether related, as husband or brother, is not known.

CHART 27

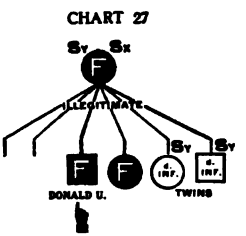


The following is the short but tragic story of Donald's mother as discovered by the Field Worker:

Nancy U. went out to service. She was employed by good families who liked her very much, as she was quiet, industrious and attended to her own affairs. She had several children of whom she was extravagantly fond. No one suspected that she was not an honest woman, honorably married and leading a moral life. It was discovered, however, that there was no husband in the case, but that she took men lodgers and her house was a very bad one. The matter was brought before the Court and the children were placed out. She was feeble-minded and afterward died of syphilis, as did two of her children.

The family tree is necessarily small and imperfect.

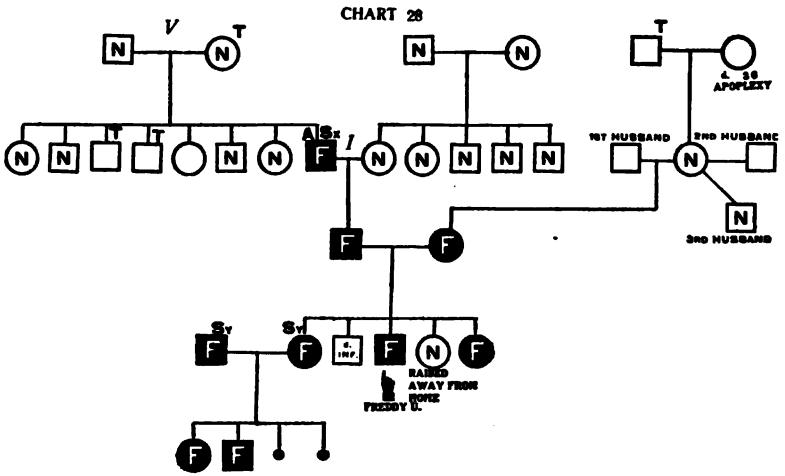


**CASE 28. FREDDIE U.** 24 years old. Mentality 9. American born, of American parentage. Has been here 10 years. He had measles at the age of 6, scarlet fever at the age of 10 and has had pleuro-pneumonia. In late years, has been in unusually good health.

At the time of his admission was only obedient to those whom he feared; was dangerous with fire; not trustworthy nor truthful; was profane, selfish, vulgar. Had attended school five or six years. He was placed in our school department; showed rather rapid improvement in conduct; learned to add simple numbers. Never learned to do very much, however, in this line and could not learn to read well. Did not seem to care for it. His conduct improved greatly. To-day, he is entirely trustworthy, is cheerful, quiet and obedient, sometimes a little stubborn, is restless, sensitive. He is an excellent worker under direction. Can run the buttonhole machine and do fine work; is a finisher and presser in the tailor shop. Has been assistant to the electrician and does well there. Works in the laundry also; altogether he is a very efficient Institution helper.

On the side of the 3 R's he has never progressed as will be seen from the following letter which was written within the year:

"Pr Johnstone
Write ing you these few lines to
ash you How my recards are from ny tennant [*attendant*]
Also would like to know How ny recards are
for the last two years I would like to know
Has any body told you any thing about me
that wasnt nice Ive been trying to do every
thing pssiabe near ruut [*right*] as I can
Have you any thing a gainist me I have been
try tne not to give any trouble to any body
Miss Annie said she would wand any better
boiy That i have bien sinee Mr Arnade and
her were hurt.
Yours truly"

Our boy is one of five, children of two feeble-minded parents. The oldest girl married a feeble-minded, syphilitic husband from whom she contracted the disease. They had two children who were feeble-minded, and two miscarriages. An older brother of our boy died in infancy. A younger sister appears normal, the youngest is feeble-minded. This normal child of two feeble-minded parents is one of the few apparent exceptions to the rule, that feeble-minded parents have only feeble-minded children. We shall discuss this case later in connection with others.

**CASE 29. GODFREY W.** 23 years old. Mentality 9. Has been here 15 years. American born, of American parents. Had measles at one year, spasms at fourteen months. Assigned cause "fall from a coach at fourteen months."

Godfrey has had about the usual experience for boys of his mentality. He was eight years old when admitted, was considered an average looking child, could not take care of himself thoroly, was forgetful, not very obedient. Did not know the alphabet, could count on his fingers to ten, careless and dangerous with fire. He was placed at once in the kindergarten and did very well, "learned to count to ten." In the next four years he learned to write about fifteen words from memory; this is the last

CHART 29 SECTION 1

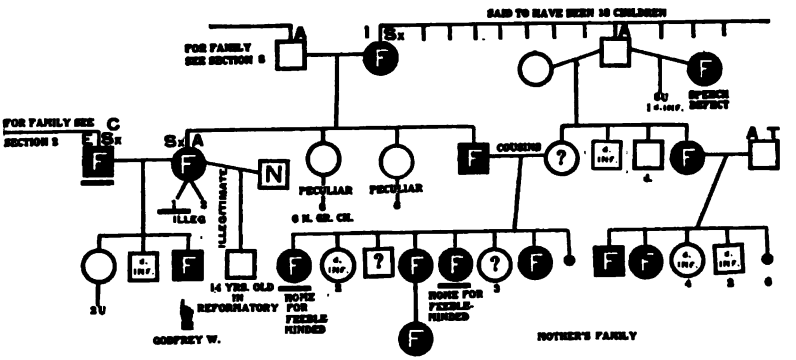


CHART 29 SECTION 2

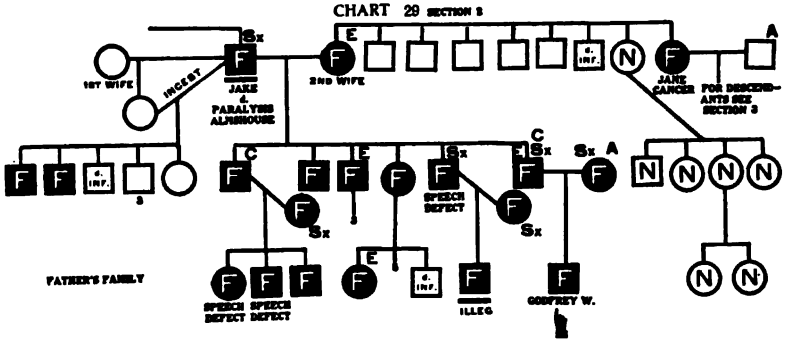


CHART 29 SECTION 3

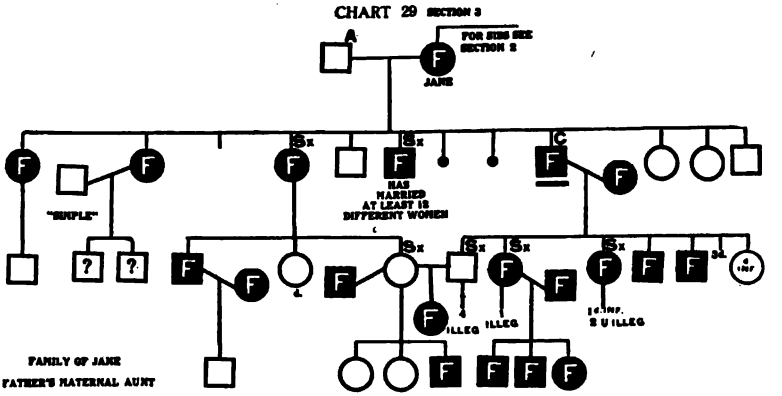

mention of any book work, and he is reported to-day as not being able to read, write or count. He does well on the second cornet. At present Godfrey is doing good work in the tailor shop and is a valuable member of the band.

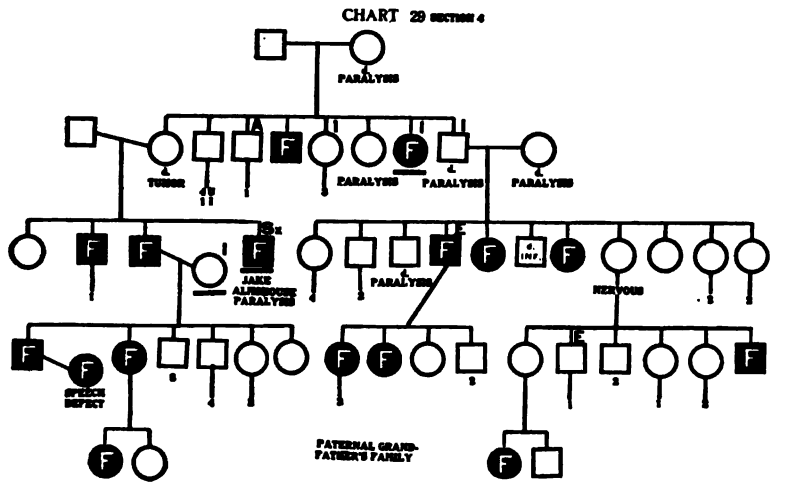


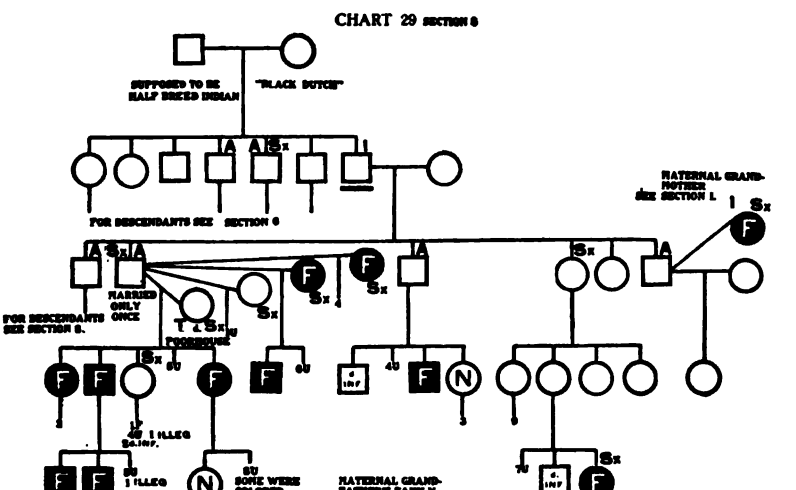

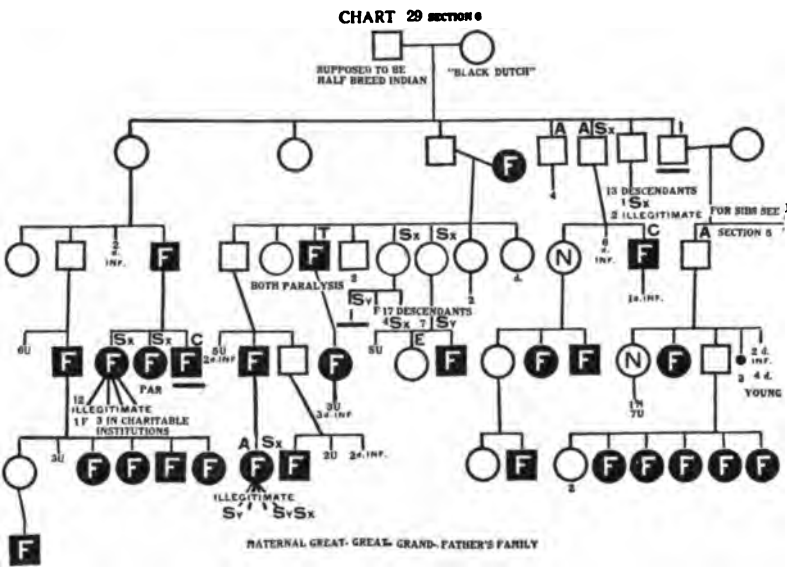


The hereditary character of his defect is too obvious to need any discussion.

**CASE 30. IVA C.** 38 years old. Mentality 8. Has been here 23 years. American born, of American parentage. Iva is an epileptic, is said to have had some form of paralysis at the age of 6. Has had measles and whooping-cough.

Upon admission at the age of 15, was defective in her walk and somewhat lame from the paralysis. Slightly defective in speech. Was passionate, somewhat destructive and obstinate. Attention was very poor and memory also. Could spell some words with three letters, count to a hundred but not write. Was for a while very hard to manage. Used to have violent and angry spells, perhaps from epilepsy. Never got any farther in school work or intellectual development. Became better behaved and a good worker, especially in the laundry. At present is a decrepit old woman at 38, cranky, quarrelsome, stubborn, active, obedient, sometimes cheerful and affectionate, willing

CASE 27, DONALD U., AGE 25. MENTALLY 9.
CASE 30, IVA C., AGE 38. MENTALLY 8.
CASE 31, MARCELLUS C., AGE 20. MENTALLY 8.

and tries, truthful, excitable, sensitive. Will take things that do not belong to her and is not now able to do much hard work.

Both parents are feeble-minded, father's sister is feeble-minded, six brothers and sisters normal, the grandfather was feeble-minded and tuberculous, his wife a normal woman who died of heart trouble at the age of 57. The mother is feeble-minded

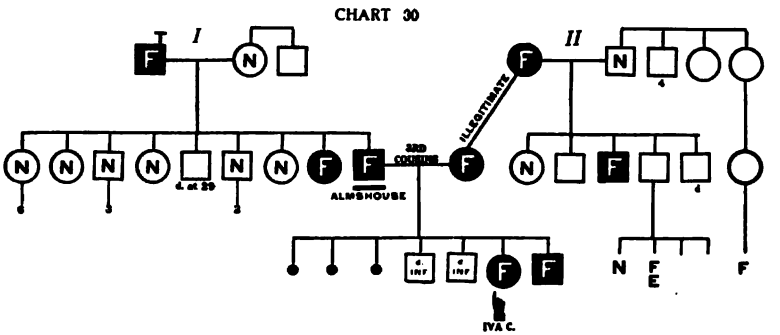


and was an illegitimate child. Her mother married a normal man and had five children, one feeble-minded, three undetermined, the other normal. This normal woman had among others a feeble-minded boy who is in our institution (Case No. 107). Iva has a feeble-minded brother. There were two children that died in infancy, and three miscarriages.

**CASE 31. MARCELLUS C.** 20 years old. Mentality 8. Has been here 9 years. Born in Italy, came here when three years old, Italian parents. Struck with a cane when 10 years old, condition said to have been due to that.

Marcellus is a moron of the slow phlegmatic type. Has about the usual history of boys of his age in general school work. Has now settled down to routine housework in dormitory and cottage, always under direction. Is cheerful and willing, quiet and obedient, rather affectionate; truthful; is fond of singing, speaking pieces, playing musical instruments and croquet. Is strong and healthy.

Here we see that it is not necessary to call in the accident to account for the condition. A younger sister is also defective; the mother and her sister were defective. Another child is in the Children's Home, whether defective or not has not been determined. We have the defect clearly marked in two generations which definitely establishes the hereditary character.

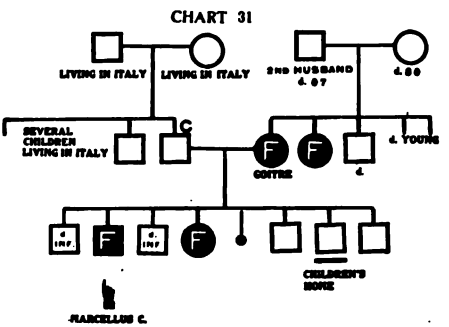


This case is also interesting as showing the relation to immigration. The family came to this country when Marcellus was three years old. He, being a moron, probably seemed normal at that time but the mother's defect also passed unchallenged.

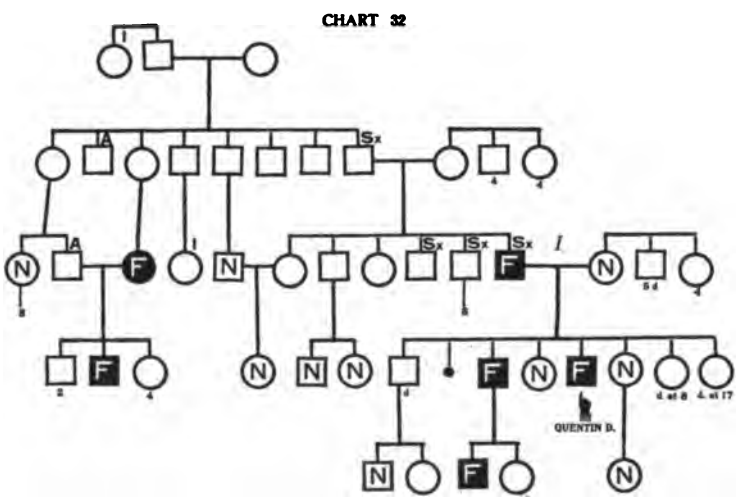


**CASE 32. QUENTIN D.** 28 years old. Mentality 8. Has been here 7 years. American born, of American parentage. Had measles at the age of 8 years, chills and fever at the age of 16.

When admitted at the age of 20, head was small, knew common colors, could read and write a little, was fond of music; sight and hearing good. His defect showed when he was five or six years old. At present he can read in the Fourth Reader and write a fair letter with many misspelled words. Works in the stable and keeps it in excellent condition. More recently has had some developments which point to a possible insanity, although this has not yet come to a point where it is possible to make a definite diagnosis.

This is a family of what might be called border-line people, many of them being difficult to determine, while some are clearly defective. Our boy has an older brother who is defective, although high-grade. He has married and has two children, one of whom is clearly feeble-minded. There are two normal sisters, three undetermined and one miscarriage.

The mother of our boy is a normal woman and nothing of importance is known of her family. The father is feeble-minded and immoral; deserted his wife. He had two brothers who were immoral. A cousin of the father's, a woman, is feeble-minded. She was the mother of seven children, one at least of whom is feeble-minded. The others cannot be determined. A cousin of this woman is insane, as was her great aunt.

**CASE 33. KARL E.** About 23 years old. Mentality 8. Has been here 12 years.

When he came at the age of about 11, he could not dress himself or use knife and fork, did no work, could throw a ball but not catch one. Was truthful, trustful, passionate, indolent, not easily managed. In our school department, he gradually improved, learned to do some kindergarten work in the first year; learned to dress himself. His improvement was very slow, however, and after five years he could do such number combinations as 3 plus 5, 4 plus 2. Nine years after admission, it was reported that he did not know his right from his left hand. Has probably reached his limit in mental training. Can-

not read or write. Attention is very poor; imitation poor; observation fairly good. Works at the barn and about the cottage. Is cheerful, cranky, sometimes quarrelsome, stubborn, active, obedient, excitable, quick tempered, destructive and mischievous. Is willing and tries but is really very dull.

CHART 33

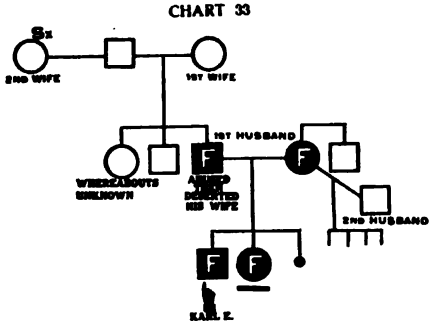


Both parents were feeble-minded. Of the three children, the oldest is Karl, a sister is feeble-minded; the third child was born dead, said to be the result of abuse, the father being very brutal. He left his wife years ago and has not been heard from. The mother went back to Ireland and left the children in the almshouse.

The sister of Karl is an interesting character. She has been dependent for years and has been placed in various homes but has never been able to retain a place or position, has been thought insane and has made a great deal of trouble. She has not been recognized as feeble-minded but is considered peculiar and a great problem among the social workers. As a matter of fact she is feeble-minded and should not be at large. Sooner or later she will undoubtedly perpetuate this feeble-minded strain.

**CASE 34. KEITH E.** 16 years old. Mentality 8. Been here 6 years. American born, American parents. The mother's intemperance and the father's nervousness given as the cause. The child had measles at the age of five.

Keith is one of the most disappointing cases in the whole School. He is a handsome boy with no marks of his defect on his body; quite active and pleasant spoken, just the kind of boy to tempt any teacher to believe that with a little special training he could be made thoroughly normal; yet every effort put upon him meets with failure. Not that he has been untrain-

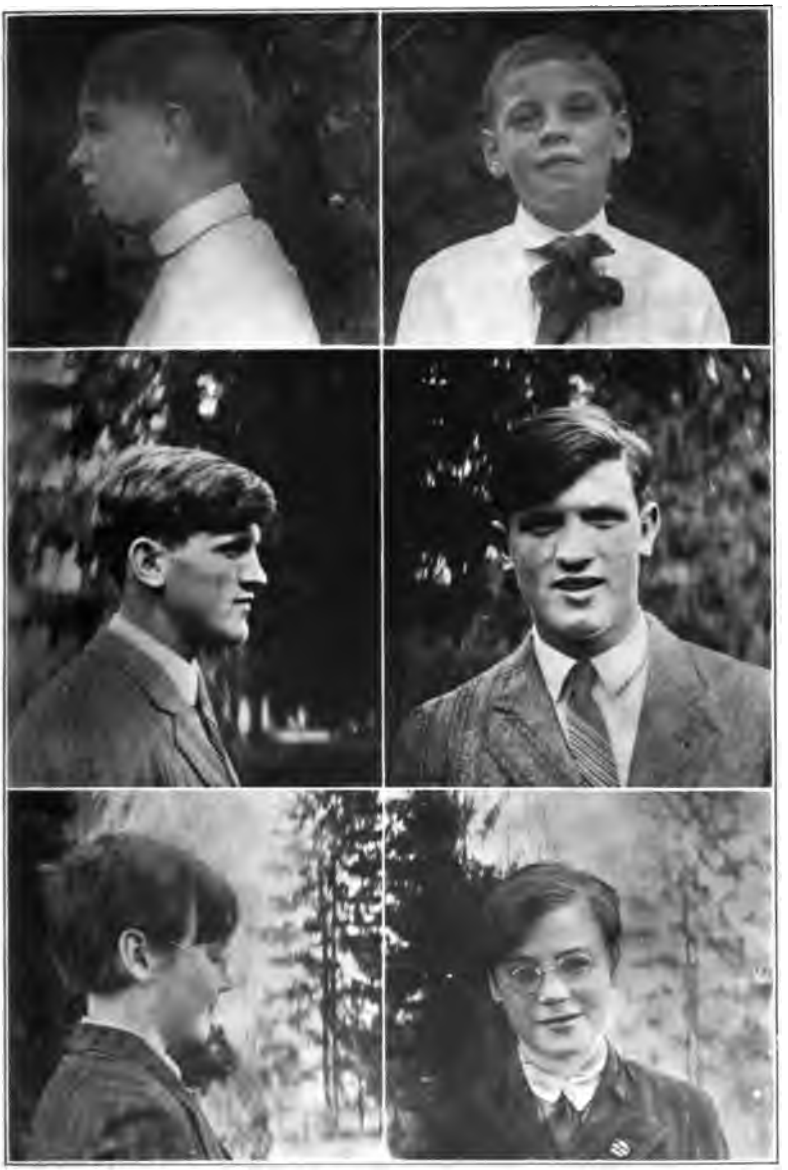

CASE 33, KARL E., AGE 23. MENTALLY 8.
CASE 34, KEITH E., AGE 16. MENTALLY 8.
CASE 36, IVAN I., AGE 12. MENTALLY 8.

able but he does not improve by training as a normal boy would, nor does he approach normality as one is led to hope he might. He has never been able to do much with his reading, writing and counting; if he were in a public school this would probably be attributed to his love of mischief, his disobedience or some other of his similar characteristics. As a matter of fact it is due, as in most cases, to his actual lack of mentality. He cannot understand these abstractions and therefore has no interest in them and gives his attention to other more attractive matters. He talks distinctly and much; can speak a piece but it takes him

CHART 34

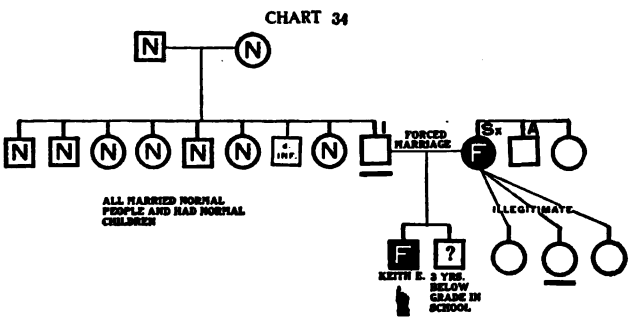


a very, very long time to learn, say four lines, soon forgets it unless it is something funny; is constantly getting into trouble; is untruthful and thieving, destructive and mischievous; requires very careful supervision. So one is forced to conclude, after long experience, that the irresponsiveness, which was noticed in him from the beginning, is due to his low mentality, not to anything wrong in his treatment nor in the attitude of others toward him. One can hardly imagine a more dangerous person than Keith would be if outside the Institution. He would be the victim of his environment and he would have just enough mentality to choose a bad environment.

A glance at his chart is not reassuring, for while it is not so bad as many, yet his mother is feeble-minded and immoral and the mother of several illegitimate children. The father was insane

but seems to have belonged to a normal family, and so we see again that the assigned cause of his defect probably plays little part, the real cause being bad protoplasm.

Keith can do a great deal of industrial work if he will; has worked with the gardener, in the laundry, the carpenter shop, and is a milking boy.

CHART 35

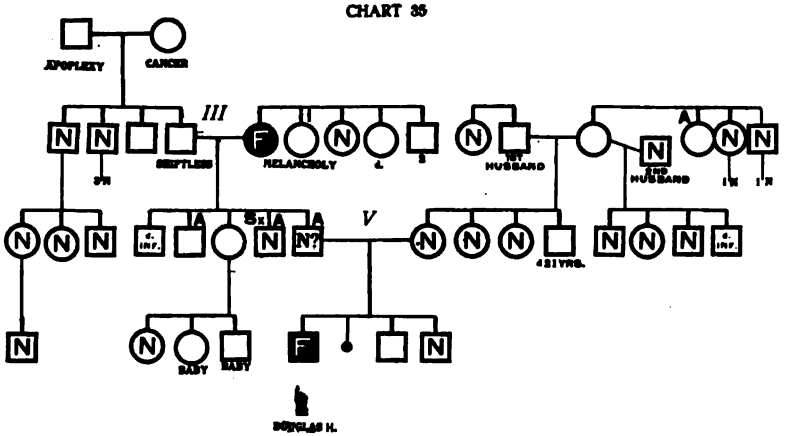


**CASE 35. DOUGLAS H.** 14 years old. Mentality 8. Has been here 7 years. American born, of American parents. Instrumental delivery.

Douglas is another one belonging to that type that is so difficult to recognize as feeble-minded. With a certain brightness in several lines, very affectionate, with some imagination and alertness, he fully passes for normal until it comes to training. He has never been able to accomplish much in the three R's and, indeed, in the Industrial Department does only mediocre work. He is only fourteen years old and small for his age. He will undoubtedly settle down later to the coarser Institution work, such as farming or care of poultry. His imagination is rather stronger than in most of his type, as a result he plays well, alone or with others. He is cheerful, active, affectionate, willing and tries, is easily managed, is very fond of his mother and grandmother.

The family chart would indicate the strong probability that

this is a case of true heredity. The paternal grandmother was feeble-minded and a sister of hers was considered insane. Douglas's father was alcoholic and questionably normal. The father's brother was alcoholic and immoral, and another brother was alcoholic. The entire family are of a low type, although we are not quite justified in marking them mentally defective.

CHART 39

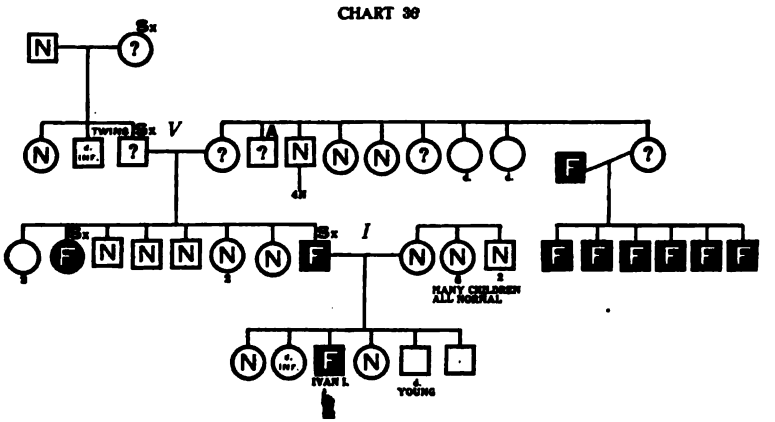


**CASE 36. IVAN I.** 12 years old. Mentality 8. Has been here 2 years. American born, father American, mother Irish. Has had measles. Instruments were used at birth. The cause of the condition given is " congenital defect."

Ivan was ten when he came to the School; he could read a very little, count to twenty, knew color and form. Is learning basketry and woodwork, as well as some work in the cottage such as making beds; in school work "has to be constantly urged to work, as he is very lazy."

The family history shows clearly that the cause of the defect is hereditary feeble-mindedness. The Field Worker's comment is worth quoting, "It is, all along the line, one of those psychological problems where weak-willed individuals have combined with moral degenerates until somewhere real mental defect comes in; just where it would be hard to say."

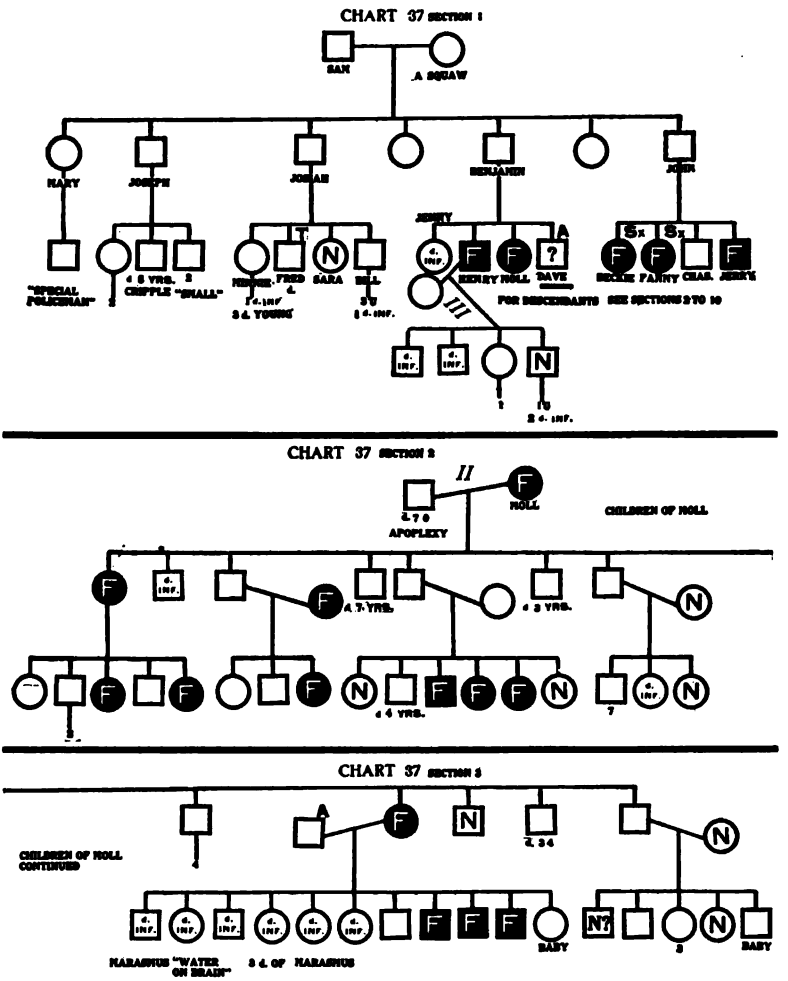


**CASE 37. NORA I.** 15 years old. Mentality 8. Has been here 4 years. American born, of American parents. Accident or acute sickness supposed to be the cause of the condition.

Nora came here at the age of twelve. At that time she understood and obeyed a command and knew all her letters,

could read a little, count to four or five, do an errand, dust, and wash dishes, under supervision. Nine months after admission she had learned to iron an apron; could copy nicely; could

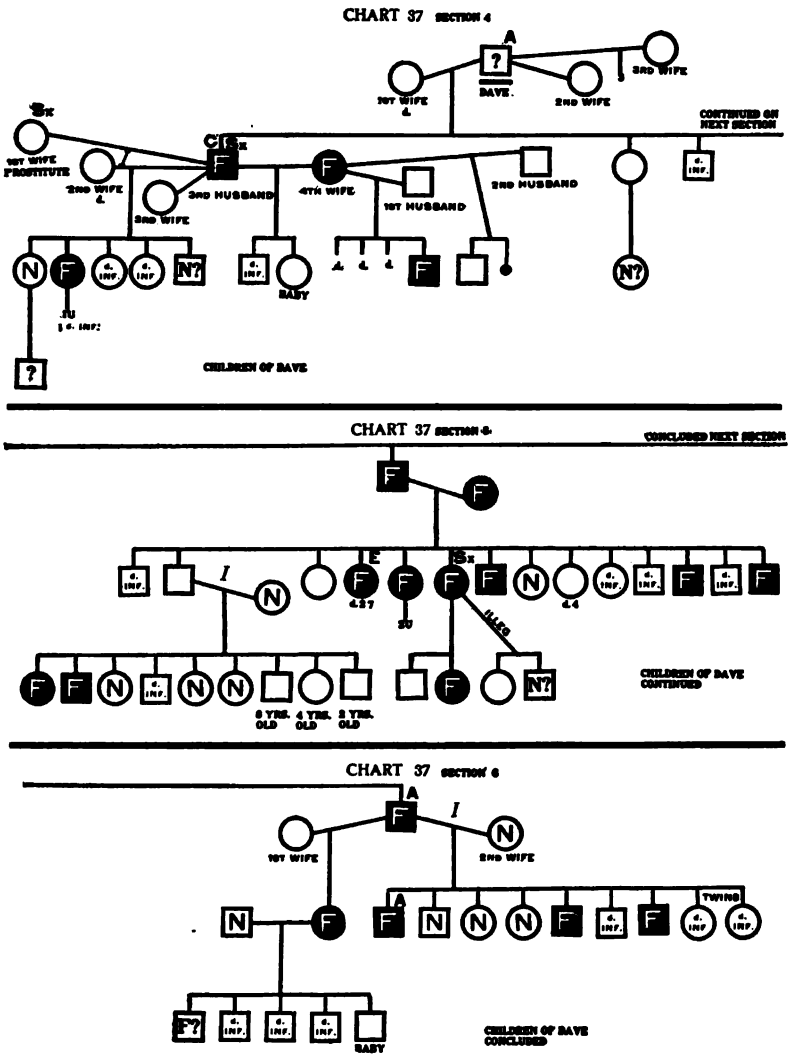

CHART 37 SECTION 7

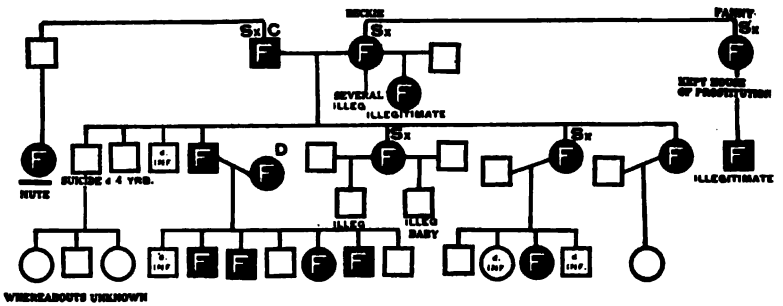


CHILDREN OF BECKIE AND FANNY

CHART 37 SECTION 8

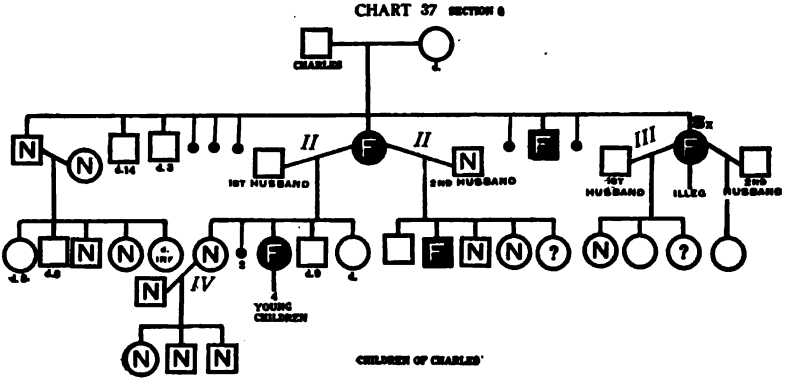


CHILDREN OF CHARLES

CHART 37 SECTION 9

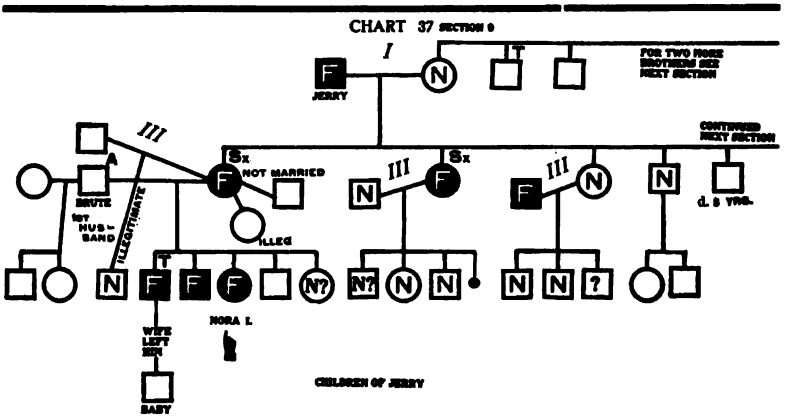


CHILDREN OF JERRY

saw a board. A year later it is recorded "Her basketry is good, woodwork fair, is doing well in ironing, much improved in English, is rather careless in cottage work." A year later in English "Tries hard, wants to be in the Second Reader, knows very few number combinations, not even to ten; sews well, plays well in the band." In 1912, a year later, "Careless with woodwork, interested in sewing, leads in physical culture." So she too settles down to housework with no other accomplishment. She is rather a normal looking girl although dull, and

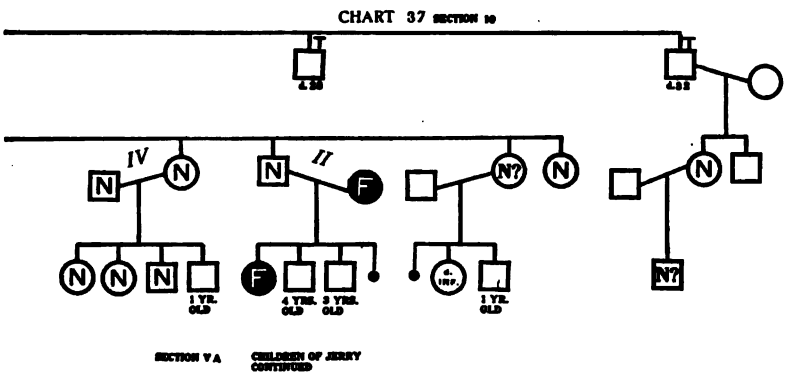


surely needs the protection of an Institution to save both her and society. She is cheerful, active and obedient, rather affectionate, is very willing, good tempered.

Nora belongs to a thoroughly defective family; her mother was a feeble-minded woman, sexually immoral, and belonged to a family defective like herself. Of the father little is known except that he was alcoholic.

**CASE 38. STEPHEN I.** 28 years old. Mentality 8. Has been here 2 years. American born, father German, mother American. Instruments were used at birth. Child had scarlet fever at five years; measles at nine, whooping-cough in the same year. Has had chronic mastoiditis and epilepsy.

Stephen is a large, strong, well-built, well-proportioned boy; writes and does number work fairly; is excitable and nervous;

is especially noted for destroying things, a habit to which he has been inclined since the age of eight. He is inclined to be quiet and retiring, not very sociable with the other children. He is an excellent worker and can help the mason or electrician, or do other similar work.

CHART 38

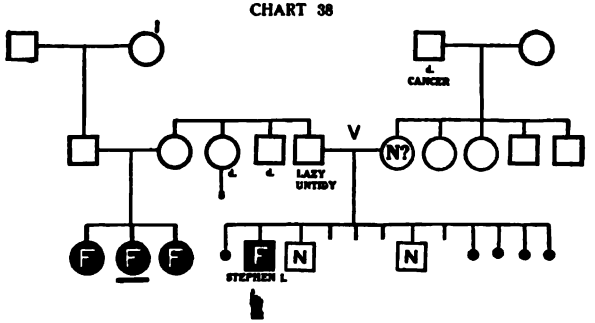


The following brief letter very well represents him; his handwriting is poor but it is the somewhat illegible writing of an adult rather than the coarse crude writing of a child, yet the structure of the letter shows the child mind.

March 3 1911

My dear Mother
I hope you are all well why do you not write to me? I did not get one letter from you since about two weeks please do write to me. I hope you will soon come to see me dear mother will you be so kind and send me again two box of candy like the one you sent me before dear mother. The weather up here was very bad on Friday nearly all day Next week I shall write to father a nice letter. Will you be so kind dear mother send me some matazines and one very month. Be sure and come to see me this month. I like to have the candy soon dear mother. I shall write you a longer letter soon. I am well. Please tell John to write to me soon,

Love to all

Yours loving son

Stephen

The family history shows the hereditary taint as can be seen from the chart.

**CASE 39. TOMMY AND FANNIE M.** Tommy 22 years old. Mentality 8. Has been here 7 years. Fannie 19 years old. Mentality 5. Has been here 12 years. American born and of American parentage. Condition said to be congenital. Both have had scarlet fever. Fannie has had measles, Tommy whooping-cough.

Upon admission, Tommy did not speak clearly, had attended public school four years but could not read; could count to 100 imperfectly. After he had been here three years, he had learned to read a little in the First Reader and write a short story. To-day he is a fairly good worker in the dining room, is quiet and obedient, willing and tries, truthful; very slow, indifferent to other children; learns a new occupation very slowly; needs much supervision.

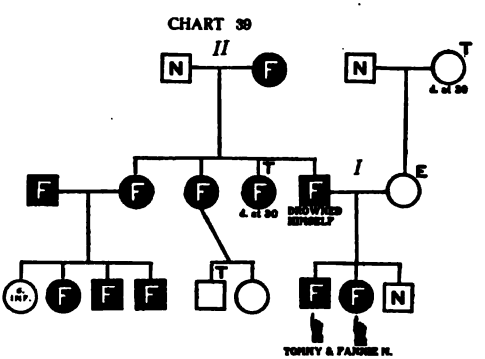


Fannie was 8 years old when admitted, little and clumsy, very heavy set, somewhat defective in speech, memory not very good; could dry the dishes; liked to sew. To-day, she has improved a little; is a helper in the cottage and somewhat useful, but on the whole, is very dull and phlegmatic; is cheerful, cranky and quarrelsome, affectionate.

They have a younger brother who is reported as being normal, but this is very doubtful. He is 14 years old and only in the Fifth Grade. Possibly he appears normal because he is relatively brighter than his brother and sister.

Referring to the chart, we see that the mother is epileptic; her father was normal; nothing else is known. On the father's side there is more defect; he and his three sisters being all feeble-

minded, as was their mother. An older sister married a feeble-minded man and had three feeble-minded children and one that died in infancy.

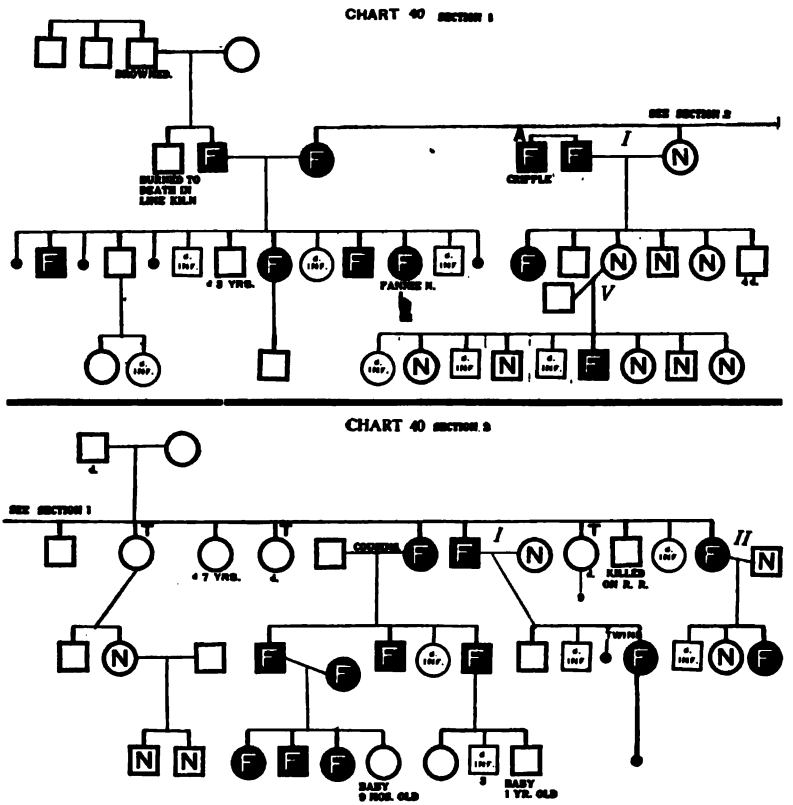


**CASE 40. FANNIE N.** 21 years old. Mentality 8. Has been here 11 years. American born, of American parents. Had measles at the age of three, whooping-cough at the age of five. Has had paralysis. This is a case of partial paralysis, the date of which cannot be learned. It has affected the right leg which is some four or five inches shorter than the other.

Upon admission at the age of ten, she was walking with a crutch, spoke clearly, was obedient, knew a few letters, could

count to twenty; knew most of the colors; her memory and attention were said to be poor; could wash dishes and sew carpet rags; had never been to school but had had private instruction for two years. In our School Department she made some progress until now she is able to write a fairly good letter although the spelling and the handwriting are very poor. As usual her handwork is much better, indeed it is very good. She is a careful, neat worker and does well, especially in sewing. She does well in woodwork and also in basketry. Her disposition is very uneven; she is sometimes cheerful, at other times cranky, quarrelsome and stubborn; she is not always obedient; rather affectionate but quick tempered and excitable.

The following is her story about spiders written Dec. 2, 1909; the writing is so poor that it is very difficult to make out; we have retained her spelling and punctuation.

Dec. 2, 1909.

"The spidres make a meb and live init
they have little baby spidres I like to see the'
little pidres the meve ther meeb with thread they
put it in the green hedge they breaks very they make
me mounted it they bit same times same are black
and same are greay same are very big and same are
very little same are brown they eat flys they make
a tunnel spidres make their meeb on the nall I like
to see then cone down from the meb it is fun to see
them."

The family chart shows a rather unusually bad state of things. Fanny is the eighth child of a large family, both parents feeble-minded. The father's brother was burned to death in a lime kiln. While this is an accident that may happen to any one, the family history arouses a strong suspicion that he may have been stupid and "unable to avoid ordinary dangers." We note again that the father's father was killed by accident. The family is very defective. It is noticeable that a sister of the mother

married a cousin and they had three feeble-minded children and one that died in infancy. This would formerly have been attributed to the fact that the parents were cousins, ignoring the fact that the mother was feeble-minded.

The further fact, that all of the mother's sibs whom we know save one were feeble-minded, would point to the probability that one of her parents was feeble-minded. If the supposition of the feeble-mindedness of these parents is correct. we have on this side four generations of feeble-minded people.

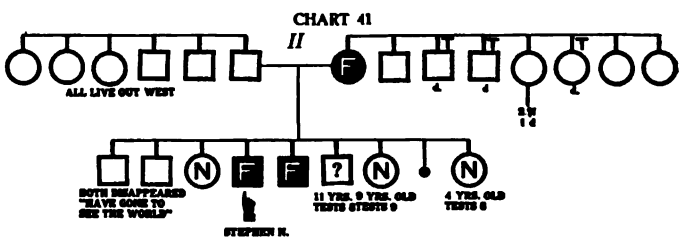


**CASE 41. STEPHEN N.** 18 years old. Mentality 8. Has been here 9 years. American born, of American parents.

Stephen was a sickly baby, his defect showed clearly at about six years of age. He had rickets as a child, could not walk until he was three years old. At the age of eleven he was still an attractive boy, straight and erect, smiling and pleasant, with no stigmata of degeneration nor external evidences of defect; spoke distinctly; talked freely; was somewhat inclined to be lazy. He could learn to recite quickly, and was altogether very promising. He made some progress and became able to count and add by tens with objects; without objects he cannot add more than to the sum of six. Made some improvement in his school studies, gradually however, his school work became poor and careless. Finally he had to be taken out of school without having achieved anything of value. He has grown coarse and rough and is a typical middle grade boy. His attainments in letter writing are indicated by the following: —

Vineland, N. J
Oct 18, 1910.

Dear John

You ll stt that
I an writing to you
as I said I would
I hope your big
brother it will
as I an well and
happy boy.
I would like to
known how Reudie is
I an thinking of
you every day
as you know I am
How is your mother
and father I an
working in the house
barn. I daret hart
you to write to
me as soon
please dont forget
Now is my sister
and by brothers
till them that
I send my loe to
them and wich
then to carl cut
to see me —
I will close
with best
wich to you
all you refind

Stephen N.

The absurd combinations of letters are due to his penmanship. Undoubtedly he intended in the first line, for instance, to write "see" but he *did* make an "s" and two "t's" — likewise he makes an "n" when he means an "m." When the writing and spelling

are corrected one sees the childish form in which he writes. He is much inclined to use bad and indecent language. He is stubborn, untruthful and thieving, moody; can be good tempered and cheerful at times; sometimes mischievous. He is a boy who would get into the worst of bad habits if he were not constantly watched.

Referring to his family chart, we see that he is the fourth born in a family of nine; there are three normal children and at least one other defective. There was one premature birth; one boy has disappeared, — gone to see the world, they say; another one has also disappeared and is believed to be dead. The mother is feeble-minded. Practically nothing definite could be learned of the rest of the family as they are living at a great distance from New Jersey.

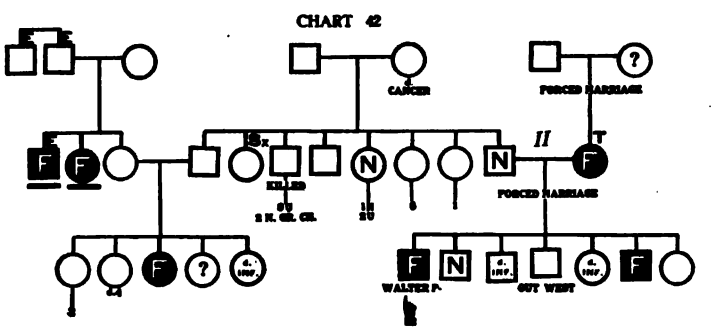


CASE 42. WALTER P. 37 years old. Mentality 8. Has been here 23 years. American born; father English, mother American. Has had measles, whooping-cough and brain fever. Assigned cause "sickness of mother prior to birth of child."

Walter was thirteen when he entered the School; was undersized, could partly dress himself, was not supposed to be capable of any useful occupation. Under training, however, he improved considerably. In school work he learned to write a few sentences from memory and to read a little, learned the multiplication table and at the age of twenty it is recorded that he

did fairly well in subtraction. All of this, however, meant merely rote work and he never makes any use of it, but he has developed into quite an efficient Institution helper and to-day is a good worker; likes kitchen work especially. He has a great interest in making money; is cheerful and obedient; truthful except when he has stolen something and finds it necessary to lie about it. He is no longer undersized but large and heavy.

The family history shows an unmistakable hereditary taint coupled with a generally low moral sense.

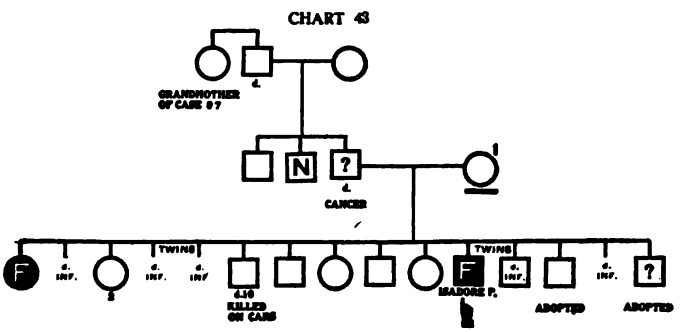


**CASE 43. ISADORE P.** 12 years old. Mentality 8. Has been here 6 years. American born, of American parents. Condition congenital; said to be due to the shock of the mother from seeing a child killed by a train.

When admitted at the age of six, it is reported that he would go up and down stairs on his hands and knees; could not dress or undress himself, obeyed a command, made sounds but did not talk; would eat trash. Under training he immediately improved greatly. A year later could name all the colors and was considered the brightest little boy in the kindergarten. He understood everything said to him and was capable of some reasoning; has continued to improve; can read a little in the First Reader and is good in sewing and basketry; can do some housework; has not yet been successful in learning to knit. He talks a great deal but cannot be understood by a stranger. He is a cheerful, affectionate little fellow, truthful and obedient.

Isadore is a third cousin to Karl, Case 97. Unfortunately we have not been able as yet to determine the exact mentality of the members of Isadore's immediate family. But there is insanity in the family and in view of the relationship to the other family which is decidedly defective, one can hardly doubt that this is an hereditary case. An older sister is distinctly feeble-minded and the whole tone of the family is very low.

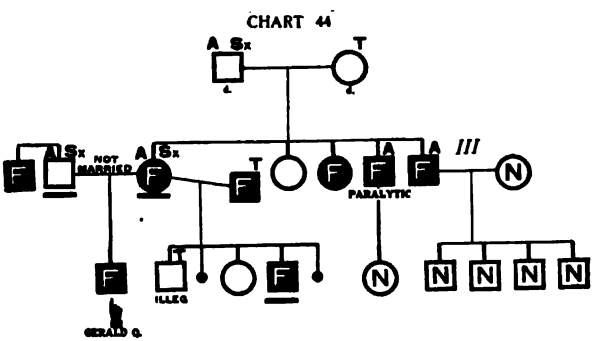


**CASE 44. GERALD Q.** 36 years old. Mentality 8. Been here 23 years. American born, nationality of parents unknown. Has had whooping-cough, diphtheria and small-pox.

Gerald is a good boy of the moron type; works well and does all he can. He is partially crippled by a bad foot but gets around quite actively; always tries to do his best work; his attendant says "although he is handicapped, being a cripple, yet the faithfulness and perseverance which he has shown in spite of his condition, are worthy of much credit." A great effort has been made at some time in his life to teach him school work. He can add and knows the names of the New England states; he reads in the Third Reader; has memorized a number of recitations; knows the second and third multiplication tables. Last Christmas he wrote to Santa Claus asking for a red sweater with black border, two rubber collars size fifteen, and a half dozen handkerchiefs.

CASE 43, ISADORE P., AGE 12. MENTALLY 8.
CASE 44, GERALD Q., AGE 36. MENTALLY 8.
CASE 45, MOLLIE Q., AGE 32. MENTALLY 8.

The following copy of a letter to his mother illustrates his ability in the letter-writing line: —

Vineland N.J.
April 4, 1910

"My Dear Mother:
I am going to write you a few lines to
let you know how I am getting along here I have a
nice on Easter Sunday and did you enjoy your self
I belong to the Kind Deeds Club and like it every
so much. How are my roussions getting at home
and do they go to school and will send me your
picture to me I got a every nice tacher and
she good to me I lots of play names they are good
to me ask uncle to write to me I got a good Boos
and is good to me and I like him evey so much
How is my aunt getting along at home I will clouse.
is time for is my bed time and I say good
night
from your son
Gerald Q"

It is a characteristic letter for children of his grade.

In the Binet test he writes some dictation but very awkwardly; he cannot count backwards from twenty to one nor count ten; is not sure of the date; repeats the days of the week and the months of the year, but does not arrange the weights in order, nor make change, — nine cents from twenty-five; cannot put three words in a sentence; cannot give rhymes or remember seven figures; does not see absurdities.

Gerald is an illegitimate child. Father alcoholic and mother feeble-minded. The mother, later, married a feeble-minded man and by him had five children, of whom one lived and is fifteen years old, feeble-minded. The mother had two feeble-minded brothers and one feeble-minded sister.

**CASE 45. MOLLIE Q.** 32 years old. Mentality 8. Has been here 19 years. American born; mother American, father's birthplace unknown.

When she came was obedient, ate correctly, could go up and down stairs by holding the rail but could not carry anything at the same time; could do an errand but was forgetful; could read passably, count, write a fair note, recognize color. For the next three years she was believed to be improving in reading, writing, sewing, clay modeling and arithmetic; learned to make a dress. Became a cottage helper and was very useful with the young children. This became her chief employment and for

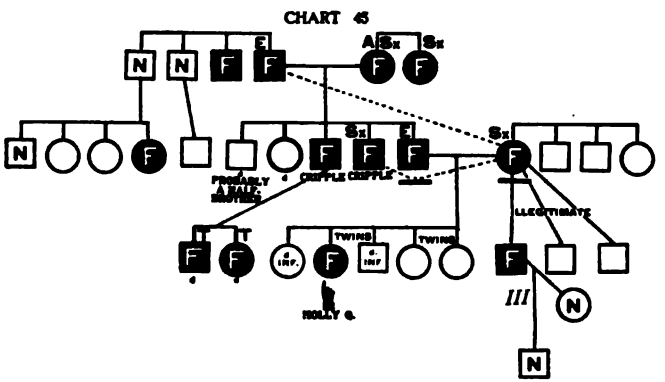


a time, she was quite valuable in that line. Of late, has been steadily less able to do work; is morose and cranky; not truthful; slow; has one leg shorter than the other, which defect seems to be congenital. It will be noted that when she was young, she seemed to improve very much and was thought to be a very promising child, but at the age of 30 or less, she began to deteriorate, which process is continuing. The following is one of her recent letters to Santa Claus which shows she never got very far in book work.

Dear Santa
this is what I would like to
have for chirstmas trunk and a box of
write paper a farry talle book this is
all I want this year and I wish you
happy chirstmas.

Both parents are feeble-minded, father epileptic with two feeble-minded brothers, one of whom is sexually immoral. The mother also is sexually immoral and has had children by at least four different men. One of these children is also feeble-minded and married a normal woman and they have a normal child. Our Mollie has four sibs, two of them died in infancy and the other two are unknown.

The paternal grandparents were both feeble-minded. The grandfather was epileptic also and had one feeble-minded and two normal brothers. The grandmother was alcoholic and sexually immoral; had a sister who was also feeble-minded and immoral.

This is an almshouse case. Quite a number of this family have been in the almshouse and there has been much loose sexuality. We note also some apparently inherited lameness which is shared by our child in common with several of the others.

Mollie has not much intellect and if out in the world would undoubtedly be the victim of bad men just as her mother and grandmother were.

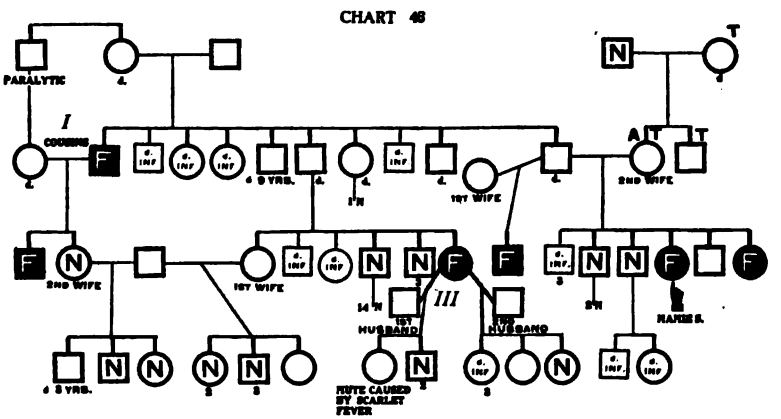


**CASE 46. MAMIE S.** 28 years old. Mentality 8. Has been here 18 years. American born; father Irish, mother English. Assigned cause, mother struck in the head by a stone. Child had convulsions at ten years. Has had whooping-cough and chicken-pox.

Mamie is sub-normal in height and weight, but otherwise not in bad physical condition. She was admitted at the age of nine. At that time she did not comprehend language well and did not always understand a command; knew nothing of school, letters, color, form, counting; was constantly in motion, had a speech defect. After a few months in school could count to forty and match colors. Six years later it is recorded she could count to twenty. This indicates her attainment in book work; in industrial lines she did much better; does good wood-work, bead weaving, basketry and sewing; plays nicely on the cornet. She is very nervous; is quiet, obedient and affectionate, very timid, willing and tries, truthful, very sensitive.

The accompanying chart shows conclusively that the defect is hereditary. A younger sister is feeble-minded, and while the father and mother are undetermined as to their mentality, the father had a defective child by another wife; he has a feeble-minded brother, nephew and niece. This is far too much defect in the family to be all accidental.

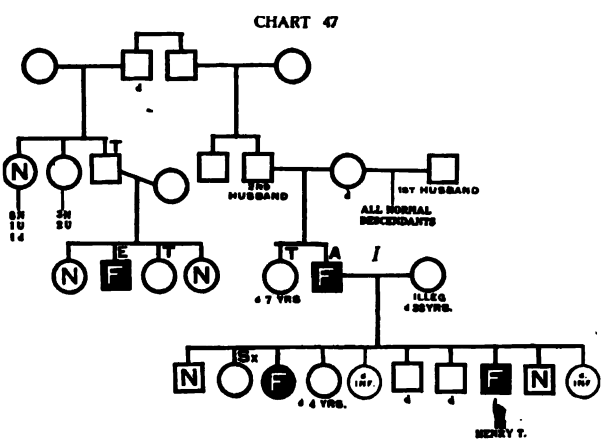


**CASE 47. HENRY T.** 19 years old. Mentality 8. Has been here 7 years. Born in Scotland, of Scotch parents.

When he came here at the age of 12, knew the alphabet, could count to a hundred; could do an errand; had been six years in public school. Has never been able to make much progress in book work, but does general farm work very well; is very cheerful, quiet, quarrelsome, affectionate, timid, not always truthful, very mischievous; works in the laundry and drives the donkey team. He is a good looking boy; a type of farm laborer that is often found, who will work fairly well but needs constant watching and makes many blunders.

His family chart shows unmistakably the signs of the hereditary influence. An older sister is feeble-minded; two brothers are apparently normal. Nothing is known of the mother except that she was an illegitimate child and died in child-birth at the age of 33, after having given birth to ten children. The father is feeble-minded and alcoholic. A second cousin of the father is feeble-minded and epileptic. Other branches of this family seem to be very clearly normal, although there is considerable physical disease, perhaps of a hereditary character.

CHART 48

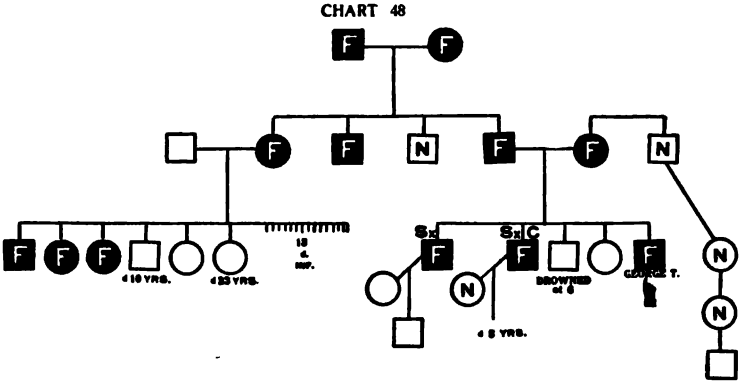


**CASE 48. GEORGE T.** 41 years old. Mentality 8. American born, probably of American parentage. Has had measles, whooping-cough and scarlet fever. Has been here 21 years.

When he came, he was reported as being very nervous, stammering a little; was trustworthy and obedient as long as he re-

membered; could do a simple errand if he remembered; could do little house work. Has changed little if any; is still trusty and obedient, can do simple work in the kitchen, also outdoor work, helping the mason a little; can play alto horn a little; is quiet, affectionate, good tempered, but forgetful. He is about average height and weight for his age; will-power as shown by the dynamometer very poor. He can write his name, but cannot spell; writes a very poor letter, as is seen from the following quotation:

Vineld, N.J.
Feb. 15th 1911

My Dear siter I am well and I though I would write you to you and let know how I am getting, alomg, alright, mow and I hope you are getting, alomg, alright, mow and we go the hall every, morning, at cort of nine, we sing, down, to the hall,"

He knows colors; can copy square and diamond; can count backwards from 20–1; repeats the days of the week and the months of the year; knows the date, but cannot count the stamps, nor repeat five figures, nor arrange the weights; cannot make change 4¢ out of 20¢.

He had two brothers feeble-minded, both sexually immoral men, one a criminal. Another brother and sister are unknown as to mentality. The mother had a brother who was normal, with a normal child and grandchild. The father had a brother and a sister feeble-minded. Another brother is reported normal; this can hardly be correct in view of the fact that the grandparents are both feeble-minded. The sister of the father married and had 21 children, of whom three are known to have been feeble-minded; of the rest, all died in infancy except three.

Here it will be seen that we have at least 12 feeble-minded people, with many others undetermined. This is a rather common type of family with considerable degeneracy in it, some criminality, and a good deal of shiftlessness. Altogether they

are known as undesirable people, with more or less sexual immorality.

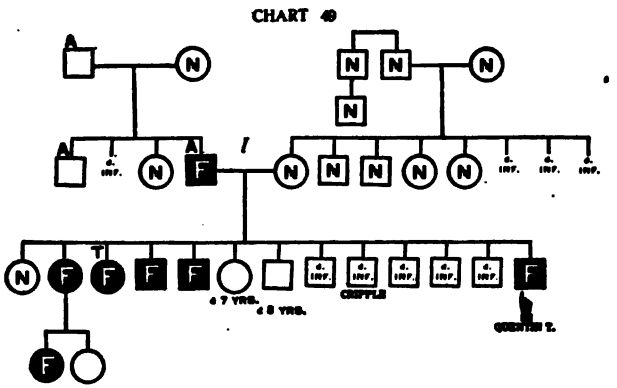


**CASE 49. QUENTIN T.** 16 years old. Mentality 8. Has been here 7 years. Has serious strabismus and very imperfect speech.

He is truthful, active and frank, inclined to be obstinate; has steadily improved since he came to the school, but is lazy; can read and write a few words, but not enough to be of any value; can do very good manual work in basketry and woodwork; can iron well; is now a very fair cottage helper; can count to 39, does well in weaving and basketry.

Father was feeble-minded and alcoholic; mother normal and of good family. Note the consequences of her marrying a feeble-minded man. The father had a normal sister and an alcoholic brother; another child died in infancy. Of the grandparents on this side, the father was alcoholic, the mother normal. The mother of our child was normal and had four normal brothers and sisters. Three others died in infancy. The grandparents were normal. Quentin is the youngest of a large family of whom the first was normal. The next four, two girls and two boys, were all feeble-minded, the oldest of these married and had a feeble-minded child. Then there were two that died young and five that died in infancy. One of these was born a cripple.

**CASE 50. BENNIE T.** 20 years old. Mentality 8. Has been here 7 years. American born; father Dutch, mother German. Had spasms at one year, measles at five, diphtheria at six. The condition is supposed to be due to the diphtheria.

Bennie came when he was 12 years of age, had been in public school two years, was beginning to count, read and write; memory was poor; he was heedless. A year later it was recorded that he could add very nicely when the total of any column was less than 20; could subtract without borrowing; knew how to use woodwork tools but used them poorly; was fair in basketry work. English was rather hard but he read in the Second Reader. Two years later when he was fifteen years old he had improved in basketry, woodwork and English. Two years more, at the age of seventeen, the record is, "is better in woodwork, very little better in basketry, improved in English and is now reading in the Fourth Reader." One year later, at the age of eighteen, "seems to be at a standstill in basketry and woodwork, works very slowly and does not improve; can add and subtract only simple combinations; is a barn boy."

CHART 50

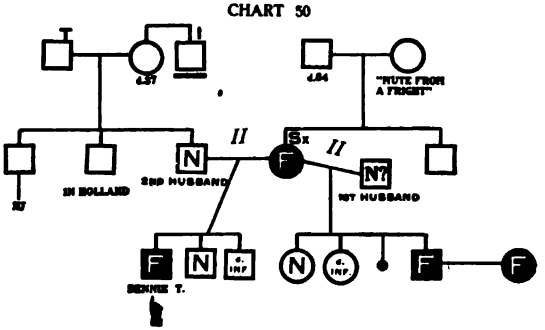


I present a small exhibit of Bennie's work, which shows so well what a feeble-minded boy, of not even the highest grade, can do when carefully trained; it will be remembered that Bennie is only of a mentality of eight, while some of our children have a mentality of 11. By careful training, probably largely thru a natural memory, he has been able to accomplish this work. It must not be thought, indeed from inspection it

Jan 11, 1906

Example I.

2 1 2 3 2 1 2 2 2
3 4 1 6 9 8 7 6 5 4
3 9 6 1 4 2 3 6 9 6
2 4 1 6 9 8 2 4 1 6
6 1 4 2 3 6 1 4 2 3
2 1 0 2 3 2 1 4 2 3

1 8 0 4 0 0 7 6 6 1 2

March 25. 1907

When we first brought it in spin a thread and it made out it was dead Henry Packer found it by the Boiler house and we had him a paste board box This is the worm that Miss Flowers found it by the Markham bridge the sassafras tree and we put him in the case and it did not turn and it dropped his head and it started to turn it looked like this

will hardly be believed, that he is thoroughly intelligent in regard to this; indeed to-day he has stopped school and gone to work on the farm where he has lost practically all of this. He is still able to read and can make very simple number combinations.

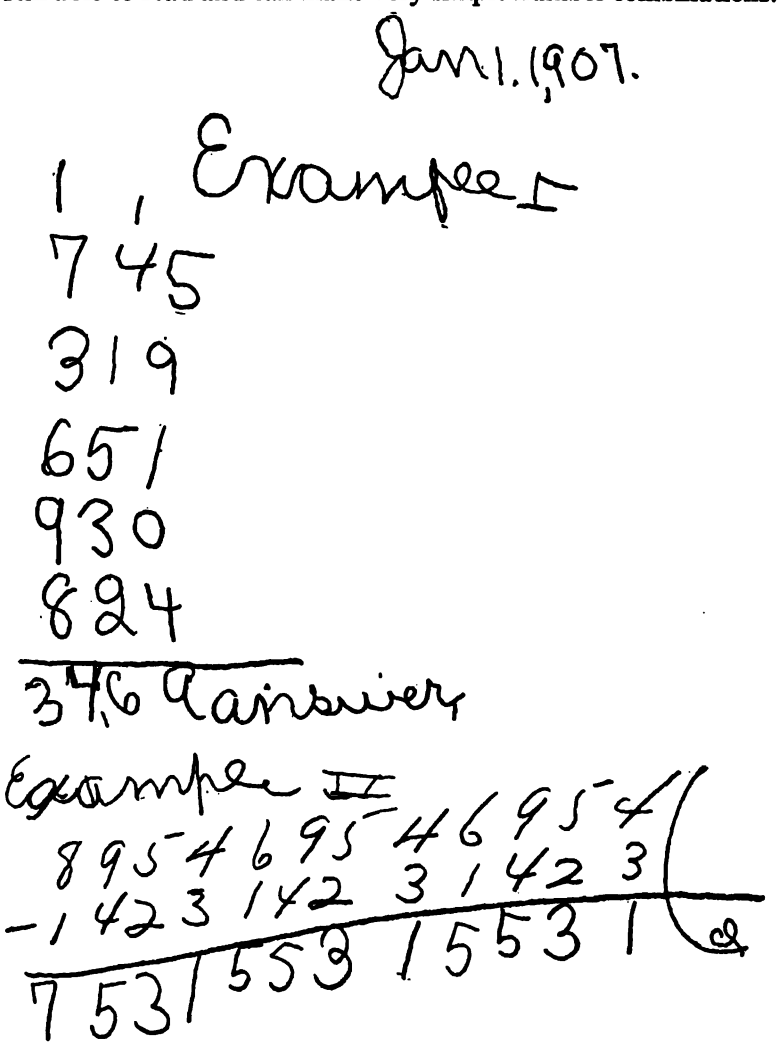

He can do a good deal of work and is a good Institution helper; is cheerful and willing, but it is more than doubtful if his long school training and drilling in the three R's has been of any real value to him or if he uses it to-day.

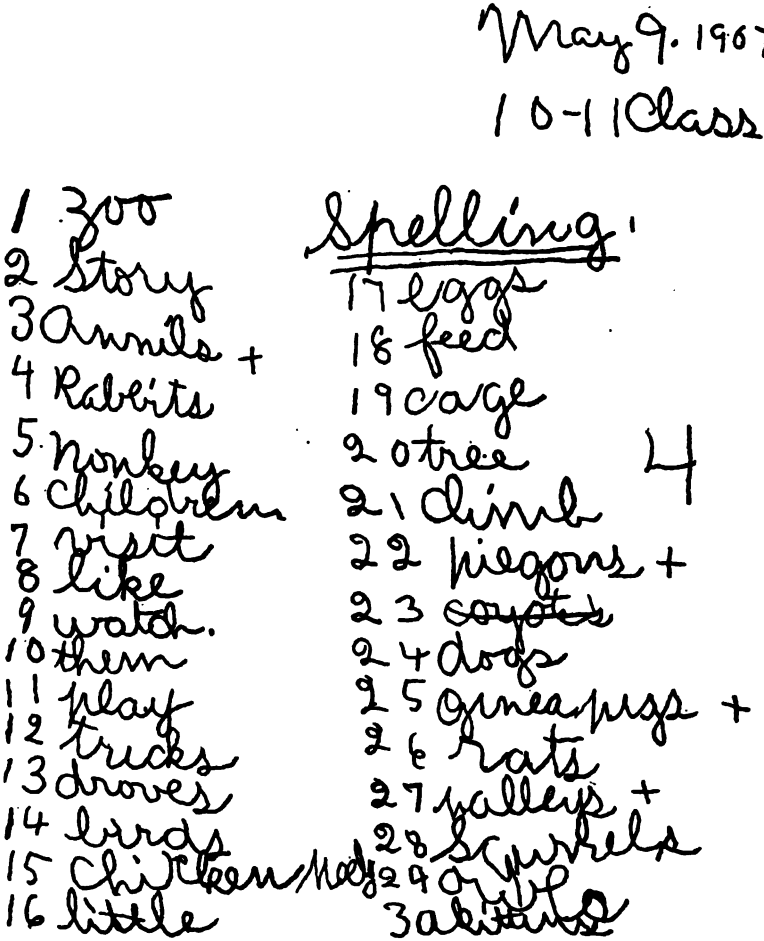


The family chart shows distinctly the hereditary character of the defect, and is doubly interesting because Bennie's mother,

herself feeble-minded, was twice married, apparently both husbands being normal, and by each of them she had a feeble-minded child and a normal child.

Bennie's feeble-minded half-brother is apparently of somewhat lower grade than Bennie himself, and yet he has married a girl of about his own grade. An older sister is an intelligent young woman, well trained and holding a responsible position; she has no dealings with the rest of her family.

Vineland, N. J.
April 1910.

Dear Mother I would write you a letter hoping you are well I am well and having a nice time here these days.

How is brother —— getting along? I hope he will come out sometime this week. Tell —— I thank her for the pretty Easter card. We had a very pleasant time here on Easter. We had corlored eggs I helped with them. I am trying to learn all I can in school I would like to see ——. With much love to all at home

Your loving son,

Write sooner next time.

Dec. 3. 1909.

*Tomato Story*

Tomatoes are planted on the farm three inches deep and the tomato has big roots.

Tomatoes are shaped like apples. Some tomatoes are very bit and large. Henry had a big tomato vine and he had his picture taken with it.

Each boy has own garden and can plant anything that he wants. The things I planted was counpoupes and radishes. We caned a good many tomatoes this summer. We rised most of them on Mr. Dumphy's farm by the hospital.

**CASE 51. KARL U.** 20 years old. Mentality 8. Has been here 7 years. American born; father American, mother Scotch. Had measles at the age of 5, and whooping-cough at the age of 6. Has had an abscess on the eardrum. Has a bad ear which is incurable and he is quite deaf. Is said to have been covered with boils at birth.

While he is a low grade moron, upon admission at the age of 13, he knew the alphabet, could read a little; had been in public school six years; could do an errand. He learns new tasks very slowly, can now read in the First Reader, writes a letter to his mother which is unintelligible on account of poor chirography and spelling; has been unable to learn knitting, cannot take the right number of stitches. In outdoor work he does better; works in the dairy and with the mason; is generally a good boy if rightly managed; is cheerful and silent, sometimes quarrelsome and stubborn; is active and obedient, affectionate.

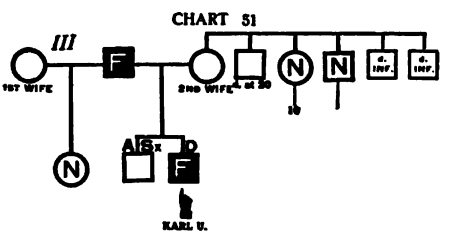


But little has been determined in regard to his family except that the father is feeble-minded, has been twice married; by his first wife, had a normal daughter. An older brother of Karl's is immoral and alcoholic, said to be good for nothing. Probably is feeble-minded like Karl.

**CASE 52. FRANK U.** 24 years old. Mentality 8. American born, of American parents. Has been here 9 years.

When he came, he walked sluggishly. There were twistings and nervous movements of arms and legs; talked distinctly, ate heartily, could dress and undress himself. Did not play, did some housework, washed dishes; had no sense of order or cleanliness. He is of average height and weight but cannot blow the spirometer. He is sober, silent, quarrelsome, restless, truthful, sensitive and moody; has very bad habits. He is a helper in the care of low grade children; can read a little but writes a very poor letter as the following note to his sister will indicate:

Vineld, N.J.
April 8

"Dear Sister I wuld like you to cane seee ne this sumer day I work in the house and scrude the floor I an will and hing a good tin in hear I wont to see Taye and annie to an nell and uncke fhon and grand man H am is the boy Will you sed ne a pictur fo boy as want one with love to all
your loving brother"

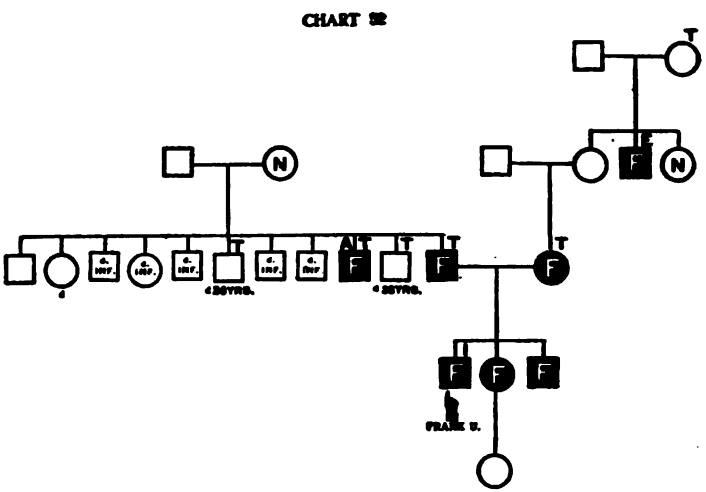


He can copy a square but his diamond is somewhat doubtful; sees what is lacking in the unfinished pictures, but does not know how many fingers he has on each hand or both hands. However, he does most of the questions in the test for 8 years and for 9 years. This scattering in his answers over so many years would indicate either epilepsy or insanity. He has a good physique and looks intelligent. He is one of the kind that certainly would deceive the uninitiated.

The parents and their three children are all feeble-minded. The father was also tuberculous and had a feeble-minded, alcoholic and tuberculous brother. The rest of his family, except

one, are dead. Five died in infancy, one is unknown and two died of tuberculosis. The paternal grandmother is a normal woman, but the grandfather was unknown. The father of our boy died of tuberculosis. The mother's uncle was feeble-minded and epileptic.

This boy recently developed insanity and has been removed to an insane hospital.

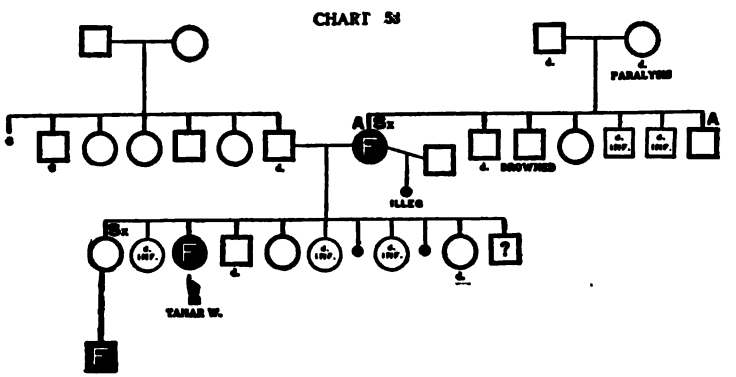


**CASE 53. TAMAR W.** 30 years old. Mentality 8. Has been here 15 years.

Upon admission was about 15 years of age, of average size and weight; had hemiplegia on the left side; could partially dress and undress herself; had defective speech. Could read in the Third Reader, could do errands, and wash dishes. Tamar reads for her own pleasure and that of the other children — a rare accomplishment for a defective. She could not do much in number work nor write a composition although she did write a very fair letter; knows a little geography. Industrially she is good help at housework; works in the girls' dormitory and in the laundry. She is sober and morose, somewhat cranky and quarrelsome, stubborn; will obey if she knows she must. Is not truthful and is somewhat thieving; rather sly; proud of her pretty dresses.

Tamar is one of a family of eleven, most of whom are dead. An older sister is immoral and the mother of a feeble-minded boy. The father of this family died of kidney trouble at the age of 52. Little is known of his family except that he was one of thirteen children. The mother was feeble-minded, alcoholic and immoral. She had several brothers and sisters of whom nothing is known except that some are dead and one brother is alcoholic. This girl had a strong tendency toward immorality and only by careful custodial care was she saved.

CHART 54

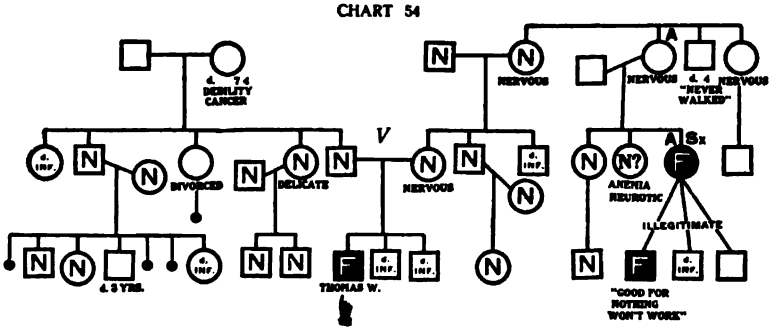


**CASE 54. THOMAS W.** 27 years old. Mentality 8. Has been here 2 years. American born, of American parents. Had whooping-cough and scarlet fever at four years. Has had measles twice. Condition is said to be congenital.

Thomas did not talk nor walk until three years of age. Speech is imperfect. He has been in public school two years and private school a year and a half, but made very little progress; has a hopping gait, but no noticeable body deformity. He keeps his mouth slightly open. He is much interested in machinery and electricity; cannot read or write. When excited or teased he often has a sort of collapse but does not lose consciousness. His marked nervousness is his chief characteristic but he seems to be improving a little. He helps about the school, sweeps, dusts, makes beds, helps dress the little boys.

The family chart is uncertain enough to be interesting. At first glance the immediate family seems to be entirely normal, but there are some defective relatives. There are two other feeble-minded persons in the family and it is difficult not to believe that the case is hereditary. If such is the fact, it must run back to Thomas's maternal great-grandfather or grandmother; of these people we know nothing of importance. They had four children, one, the grandmother of Thomas, was considered normal but very nervous; another was alcoholic, mental condition undetermined; she was the mother of a feeble-minded woman who was alcoholic and immoral and was in turn the mother of the third feeble-minded person in this line. It is entirely possible, and one may say in view of the facts, probable, that the great grandfather or grandmother carried the defect, but this was recessive and remained dormant until something that we cannot understand brot it to the front in the case of our Thomas. In the other line we might perhaps think that the alcoholic daughter of those great-grandparents might have been the one to accentuate the defect and bring it to the surface a generation earlier; at least, as said in the beginning, one can hardly doubt that it is an hereditary condition with which we are dealing.

**CASE 55. FLORENCE X.** 21 years old. Mentality 8. Has been here 8 years. Parents' nationality unknown. She had measles at the age of 9 years. Did not talk until 6 years old, could not walk until 11.

At time of admission she could count to nearly a hundred; knew color and form; could not be trusted; is still going to school, but making little progress in anything but industrial work; does nice embroidery, some hammered brass work; does nicely in ironing; has learned to sew and do some housework; can tell time, count, make buttonholes and sew on buttons; is not truthful, is thieving and mischievous. The following is her letter to Santa Claus at Christmas (1912). The penman-

ship is very poor and irregular but can be made out. The rest speaks for itself.

Vineland N J
Dec, 1the, 1912

Dear Santa Claus,
I thought I would write you a letter to tell you what I would like for chirstmas Please bring me kinona and fairy wiast and a bed slippers and a picturs for the cottage.

Fron your Loving friend,
Florence X

Like many of these cases, Florence looks to be much younger than she is.

The family tree shows a remarkable growth of defectives. The mother is feeble-minded and a prostitute; the father is

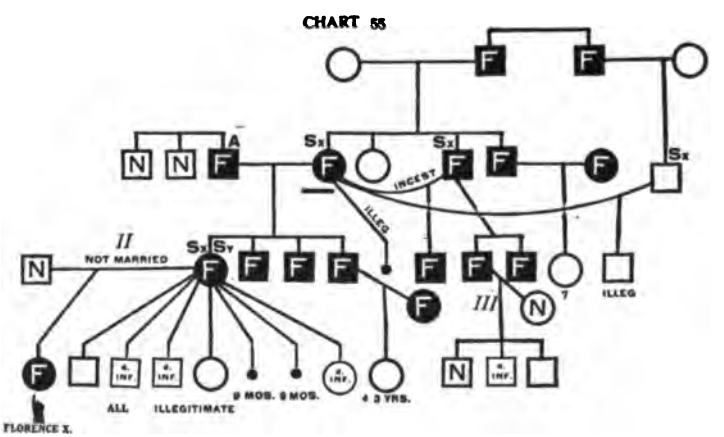


supposed to have been a normal man who had four normal children by another wife. The mother had three feeble-minded brothers. They were the children of two feeble-minded parents, the father being also alcoholic although he had two normal

brothers. The mother was sexually immoral. She had two feeble-minded brothers, one of whom married and had two feeble-minded children. The father of this group, that is, the maternal great-grandfather of our child, was a feeble-minded man who had a brother who was also feeble-minded. Thus we have four generations of feeble-mindedness with four cases of sexual immorality, besides bad physical conditions and other disturbances.

**CASE 56. KING B.** 37 years old. Mentality 7. Has been here 24 years. American born; nationality of parents not known.

King was admitted at the age of fourteen, he came from a special Reform School, was nervous and gluttonous, careless,

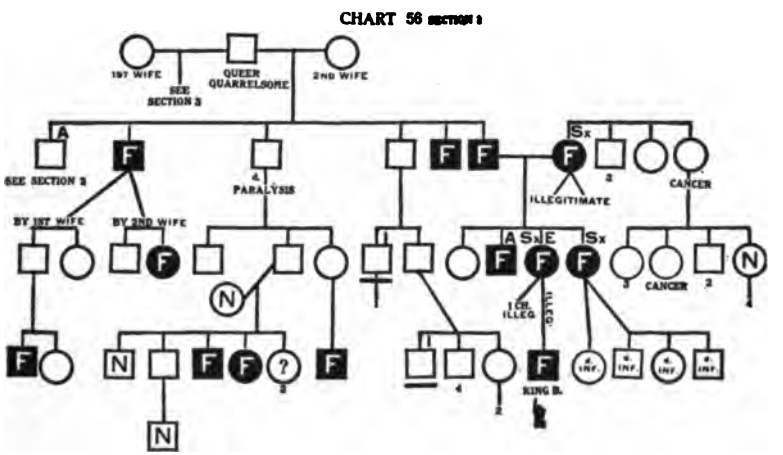


dangerous with fire; had been in school nearly two years; knew the alphabet and "some words, some days"; could not write. For three years he was tried in the school department more or less, but with no success; now he has settled down to farm work and has become a good farmer under direction. He can use the team in harrowing, plowing, hauling coal and similar work. He is usually cheerful, but once or twice a year gets a

grumbling, unsettled spell and wants to leave. A trip to Philadelphia or a similar privilege straightens him out for another year.

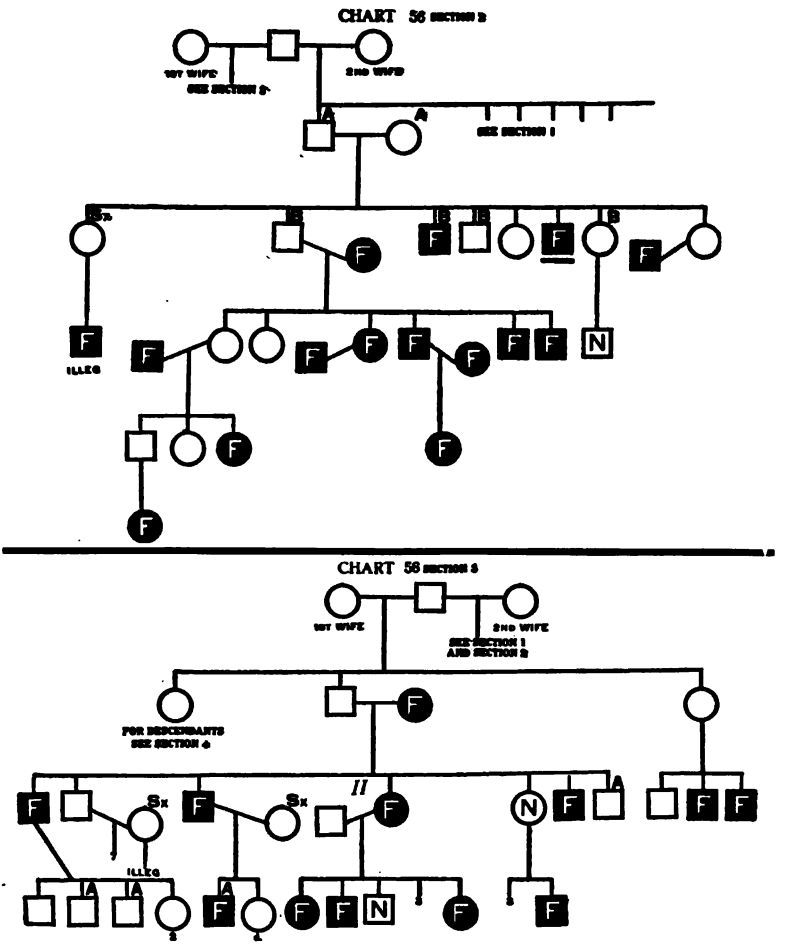


Of late he has taken a great interest in two small boys, one a cripple, and he is almost a father to them; he carries the cripple back and forth to entertainments and holds him in his arms

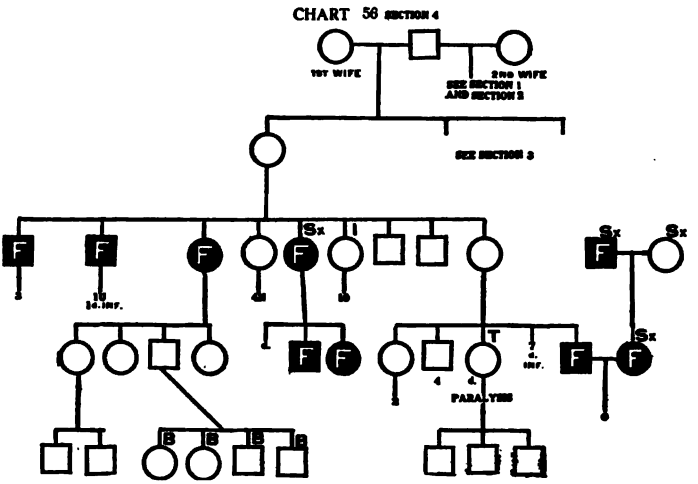


thruout the exercises. He more than earns his living, under direction, and is happy and a good, useful Institution man.

**CASE 57. HORACE C.** About 14 years old. Mentality 7. Has been here 7 years. American born; parentage of father unknown, mother American. Has had chorea. Assigned cause is "neglect, improper care and abuse by worthless parents."

Horace is an interesting little fellow; he came to us when about seven years old; his actual age could never be determined. It is said that his parents fed him with narcotics. He was a delicate boy, ate very little; was obedient and had a happy disposition; stammered, could not recognize color or form, had never been to school.

Since he has made no change of mentality in the two years that we have used the Binet tests, it would seem that he has probably reached his limit. At first he made considerable improvement in the kindergarten and it is recorded in 1910 that he had improved in writing.

The following is a sample of his writing January 26, 1910. The upper line is the copy that was set for him and the

other his attempt to imitate it. This is typical feeble-minded writing.

I can run.
I can run
I can run

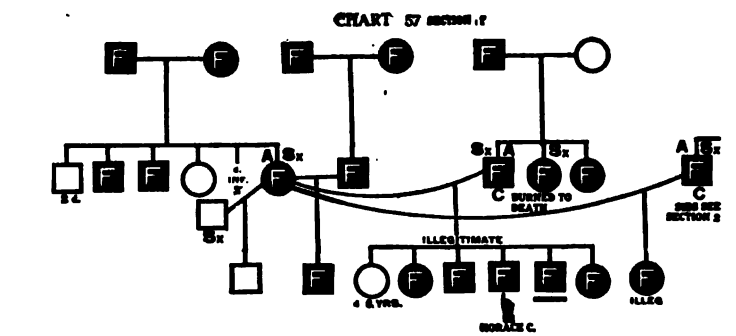


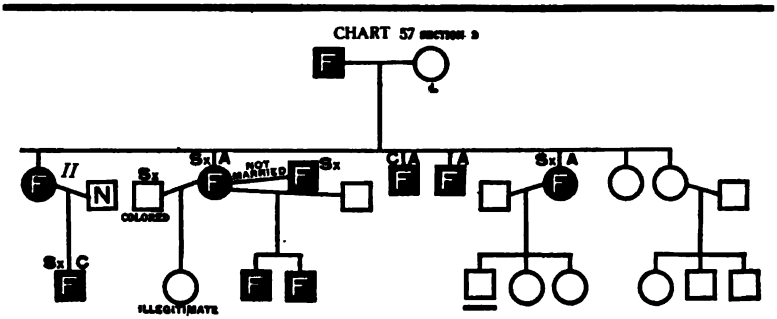

CASE 56, KING B., AGE 37. MENTALLY 7.
CASE 57, HORACE C., AGE 14. MENTALLY 7. His two brothers.
CASE 59, DAVID D., AGE 15. MENTALLY 7.
CASE 61, BESSIE I., AGE 13. MENTALLY 7.

At present Horace does errands, polishes metal, does housework, and goes to school; is cheerful, active, willing, good tempered, destructive, rather mischievous, a little bashful and sly. It is recorded that he is thieving, obstinate and stubborn, quick tempered, excitable.

Horace was sent to us by the Children's Home Society and our first knowledge of his family came from them. The following is from their report to us, leaving out names and unessentials.

"Father's name ——. Mother's name ——. Two children that we know of, Horace about eleven years of age, James died in our Receiving Home, would now be about nine years old. They had lived prior to that at ——. The mother was brought up near ——. Do not know her maiden name but think it was ——. Her father had the reputation of being indolent and lazy. I remember hearing a story about him, I do not know whether it is true or not, that owing to the poverty of the family, a neighbor had collected potatoes and other vegetables and drove up to the —— home to donate the same on account of the children. Mr. R. complained because the various vegetables had not been sorted out, involving so much labor on his part. This may be exaggerated but it shows the type of the family. On or about the first of November 1904, Horace's father who was a charcoal burner quarreled with his wife, a very frequent occurrence, and, I am informed, tried to kill her by firing his shot-gun at her twice. She fled into the woods, with a small child in her arms, and remained in hiding nearly all night. He, disappointed at not accomplishing his purpose, apparently took his bed out into the back yard and demolished it, and taking an axe smashed his stove into small pieces.

You can judge something of the mentality of the man from that procedure. Then he disappeared, leaving Horace and Jimmie at the house. We never heard definitely of the man again. The woman came to —— with her children and as I was in the locality took charge of these two boys. She kept the baby.

The mother is a very loose, careless, shiftless, ignorant, and improvident woman. She told me she had had nine children. She could not tell me their ages or very much about them. It was a common thing for her to take her smaller children and go away on long tramps. The children had been very poorly nourished when we received them."

We quoted this report for two reasons: first, to show a very common type of report of children that find their way into the care of these Societies, and second, to show one form of evidence on which we come to the conclusion that such families are mentally defective. No one with any experience with defectives could doubt for an instant that this was a feeble-minded family. However, our history does not rely upon this alone. We were able, through the efforts of our Field Worker, to establish these facts and many more that will be seen by reference to the family chart. It is not necessary to go over this in detail, a glance shows the large amount of sexual immorality, alcoholism and criminalistic tendencies. Truly a terrible family and one cannot refrain from asking the question, "Why has society allowed the parents of this child, to say nothing of the others in this generation, to live a life of debauchery entirely unrestricted?" We are also fortunately able to reproduce the pictures of two brothers of Horace. Although photographs are unsafe guides one can easily see the mental defect in the faces of these children.

**CASE 58. SAM C.** 16 years old. Mentality 7. Has been here 4 years. American born, of American parentage. Has had chorea, whooping-cough at the age of five, measles at six, asthma. Assigned cause, "hereditary."

Sammy is an interesting case of a high grade imbecile with a good deal of physical disturbance. Upon admission three years ago, he could dress himself, but could not read, write or count; knew color and form; attention was poor, imitation good; could do errands and wipe dishes; was excitable, laughed and

cried without cause. He had a teacher for four months but soon forgot what he had learned. His career here was marked in the beginning by peculiar crazy spells at frequent intervals, in which he would suddenly rush out screaming and crawl into some narrow, close space, — probably under the seats in the school room — and continue to scream. If ignored for a while he would gradually get quiet and come out of it. After some little time it was discovered that if given food he quieted at once. Acting upon this hint those who had charge of him began to watch for signs of this outbreak and by giving him a piece of bread the attack was warded off. These spells diminished in frequency until of late he has had none.

CHART 58

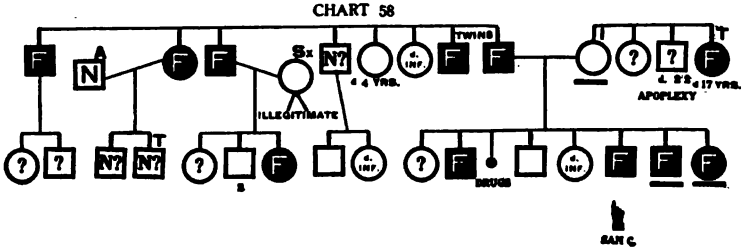


When not having one of these screaming spells he would often sit as if dazed much of the time. Those dazed spells have also gradually worn off, and he has been improving; likes to do housework and does it well. His whole disposition has improved very greatly but physically he seems to be on the downward track. He is in the hospital much of the time and is developing curvature of the spine. He is a peculiar child, very quiet and rather cheerful; pleasant to those whom he knows. Often surprises us with an outburst of what seems like childish wisdom, showing considerable thought, and even reason and good judgment.

A glance at the chart will perhaps offer some suggestion toward an explanation of Sam's peculiarity. We see that his father is feeble-minded and his mother insane. It would seem as though

he had inherited something of both conditions, for certainly many of his spells are much like insane attacks.

At least four of this family are in Institutions at public expense.

Since the foregoing was written he has shown more marked symptoms of insanity.

CHART 59

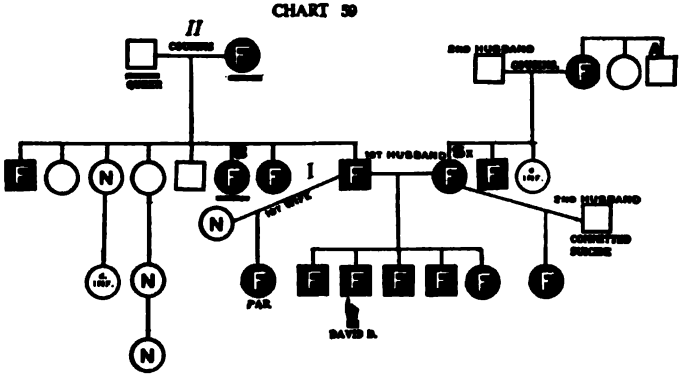


**CASE 59. DAVID D.** 15 years old. Mentality 7. American born; mother American, father unknown. The boy has been here seven years. He is partially paralyzed and walks with a limp.

When he came, it was said that his memory and attention were good. He understood and obeyed a command, was gluttonous, fond of play and obstinate. Upon entering our school, he did not know colors by name, but could match them; played with blocks and could follow a line. He improved somewhat after three years, and after five years was doing excellent brass work; had improved in his English, could always count to 19, but sometimes to 50. He is always pleasant and good natured, although sometimes quite stubborn; is willing and tries. He is untruthful and is somewhat given to pilfering; is a very good errand boy; spends the afternoon in school, is doing nicely; is usually good, but sometimes flies into terrible rages, throws anything that he can pick up, and swears. He is rather undersized, being

as tall and heavy as about 25% of children of his age. He can repeat the days of the week, but not the months of the year. He cannot count three one-cent and three two-cent stamps, cannot repeat five figures. When he first came, he was thought to be very nearly normal, but he has made no mental development since that time and has learned to do only a few new things.

Both parents are feeble-minded and have been twice married. Our boy has three brothers and one sister, all feeble-minded. The oldest brother died young. The father's first wife was normal; they had a feeble-minded girl. The father has two sisters and a brother undetermined. One of these sisters, however, has had a normal daughter and a normal grand-daughter.

The mother has a feeble-minded brother and a sister who died in infancy. They were the children of a feeble-minded woman and a man whose condition is unknown. Our boy's mother had a second husband who committed suicide. They had one feeble-minded daughter.

Of the fifteen feeble-minded people in this family, at least three have been in almshouses at public expense. The paternal grandparents were also town charges. One man committed suicide and another was killed.

David is of the type that would be a truant and an incorrigible were he out in the world.

**CASE 60. KENNETH E.** 39 years old. Mentality 7. Has been here 23 years. American born, of Irish parents. Has had measles, whooping-cough, scarlet fever, and convulsions during dentition. The latter is given as the cause of his mental defect.

Kenneth is a prematurely old man at forty, good natured, a hard worker at whatever he can do; talks distinctly and much; is sometimes quick-tempered but it does not last long; does kitchen work, washing dishes, scrubbing, etc. His attendant reports that he is a good worker, doing his

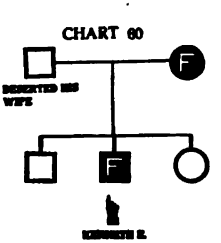

share of the hardest work; he has occasional fits of temper but they last only for a few minutes; his habits are good and we can only say he is a good, deserving boy.

This is another case that came through the Organized Charities and nothing can be learned except what is shown on the chart. The mother is feeble-minded; the father deserted her and the children.

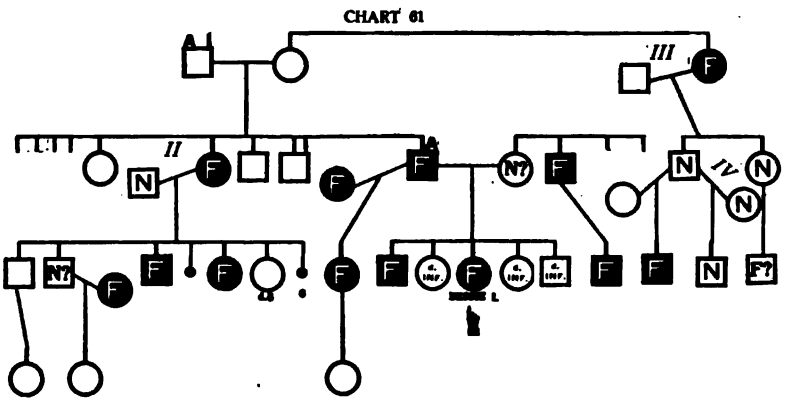


**CASE 61. BESSIE I.** 13 years old. Mentality 7. Has been here 6 years. American born; father American, mother Swiss. Has had gastro-enteritis. Supposed cause of the mental defect is malnutrition.

Bessie came here when she was seven, had been in public school five months, could not count, did not know letters, memory was poor; it has not been possible to teach her to read or count, she is somewhat trainable in basketry, woodwork and sewing; of late has developed symptoms that suggest epilepsy.

The family chart shows much feeble-mindedness and some insanity.

Bessie is very attractive; sings very nicely. She is still fairly young and may improve somewhat under training.

**CASE 62. WILFRED K.** 27 years old. Mentality 7. Has been here 7 years. American born; nationality of the father unknown, mother American. Child had whooping-cough at the age of three, measles at five and scarlet fever at thirteen.

This case is very typical for his mental age. He learned to read a little, but never cared for it. Is best in industrial work, can do a little club swinging; apt to do very little independently; helps in the cottage and laundry; works with the electrician, gets along fairly well; is very slow to learn new things; is clean and careful, no bad habits; is very polite.

There is a peculiar defect in his nervous system; he talks with a jerky enunciation, walks with a jerky step, all his movements

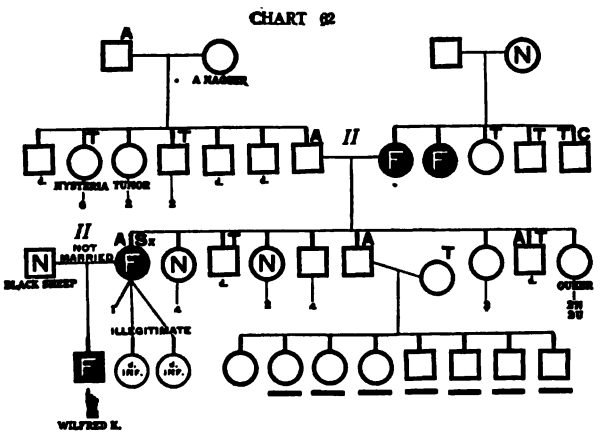


have that same lack of smoothness. He is slightly under size, due to short legs; sitting, he is not noticeably below the average. He is very sober, almost morose, very diffident. Unless one was careful in examining him he would completely stop talking; if one put the question a little suddenly or with a little too much emphasis he was thrown out completely and would not answer.

His family history shows another instance of a man of good family marrying into bad stock. The father, it is true, was called the black sheep of his family, but he was a degenerate rather than a defective. The mother was feeble-minded and a prostitute and belonged to a low grade family. We have been able to trace a large number of them but could not get intimate

information enough to determine the mentality of more than two or three; these were normal. In one case there are seven children cared for at public expense. Their mother has died and their father is alcoholic. All belonging to this family are degenerate if not defective. In the immediate family we have three generations of feeble-mindedness — Wilfred, his mother and his maternal grandmother and maternal great-aunt.

**CASE 63. WALTER K.** 24 years old. Mentality 7. He has been here seven years. He was recognized as defective at the age of five, after a convulsion, said to have followed a fright by a dog. Has had scarlet fever and pneumonia. The cause of his condition, as assigned by the family physician, was "lesion of the brain, perhaps a tumor."

This boy is of average height and weight but in grip is equal to only about 10% of normal children and is a little worse in lung capacity. He is unable to learn in school and for a long time did not talk at all. He was a very difficult boy to manage when he first came to the school, and not until he was tried in the woodworking room was he induced to do anything. This interested him and he has steadily improved, until he is able to do very good woodwork. He has also learned to speak a few words, tho not distinctly, and is now pleasant and happy. Besides his woodwork, he can do excellent mending. He is rather cheerful, silent, active, excitable and timid, very sensitive.

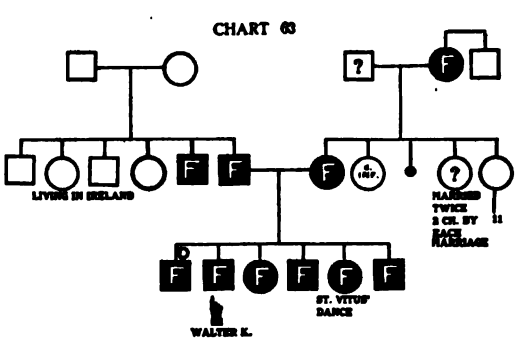


From the chart, it will be seen that both parents are feeble-minded, also the six children, four boys and two girls; father has one feeble-minded brother; four other brothers and sisters

are living in Europe. Mother's mother was feeble-minded; mentality of mother's father could not be determined.

This is an interesting family of defectives of rather high grade altho having a considerable number of the stigmata of degeneration. Some are deaf; all, on the mother's side, have a peculiar diffidence and fearfulness. Apparently they all lack any tendency to viciousness, and some of them are faithful workers at manual work.

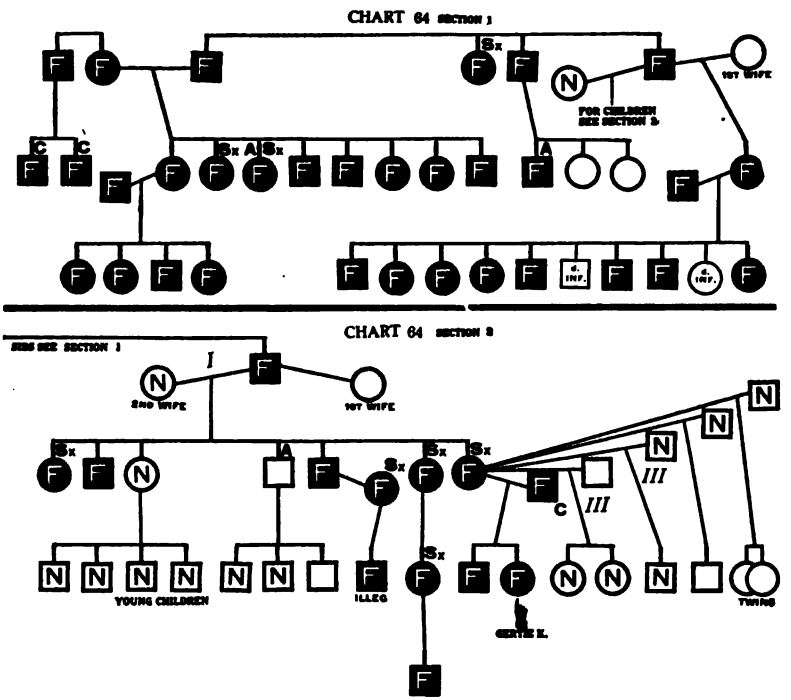


**CASE 64. GERTIE K.** 12 years old. Mentality 7. Has been here 5 years. American born, of American parents. Had marasmus from six to nine months; measles and typhoid fever at the age of three. Assigned cause "maltreatment and inherited weakness of mind."

Gertie is in some ways one of the most interesting little girls we have in the School. When she came to us at the age of six

she had had a year of kindergarten training and could recognize color and form; was nervous and excitable. We hoped, for a short time, that she was a merely backward child and that we might be able to educate her. But after four years, much of that time being spent in the kindergarten, she is only able to count to one hundred and to add and subtract easy combinations. She does something in basketry and can iron an apron without help. Can write a little story. She has probably reached her limit in that line. She is now definitely feeble-minded, being five years backward. She is improving in sewing, basketry and woodwork; she is alert, active and fond of play. She is learning to do housework, waits on table very nicely and is in every way a most attractive child.

While we have given up hope that she will ever be normal, we may reasonably expect that she will increase in mentality a little, how far above her present level, we cannot guess.

Investigation into Gertie's family history has led us into a large problem, second only to the Kallikak family; we can present only a little of the immediate family here and reserve the rest for a later monograph.

Her father is feeble-minded but nothing else is known of his family. The mother is feeble-minded and sexually immoral, having had a number of illegitimate children. The first report credited this father with four children, two of whom were normal, but thorough investigation made it very certain that the normal ones were not of the same father.

The rest of the chart speaks for itself; it will be noticed that there are a number of sexually immoral people, some alcoholic and at least two criminalistic. As a matter of fact the whole family, here shown, is part of a very large defective and degenerate race living in a more or less proscribed region where there is very little regard for the conventionalities or for law.

Case 140 belongs to the same group and is distantly related to Gertie.

CASE 60, KENNETH E., AGE 39. MENTALLY 7.
CASE 72, MILLIE N., AGE 35. MENTALLY 7.
CASE 64, GERTIE K., AGE 12. MENTALLY 7.

**CASE 65. PETER K.** 25 years old. Mentality 7. Has been here three years.

A little colored boy came to the Training School at the age of ten years. He had about the mental development of a child of seven years; defective speech. He was reported to be profane, passionate, vulgar, untruthful and a run-away. He improved steadily, becoming interested in all manual and industrial work and showed considerable ability along these lines. He took great delight in gardening. He was able to take but little intellectual training, but gave every promise of becoming a good, steady, industrial worker under close supervision.

CHART 65

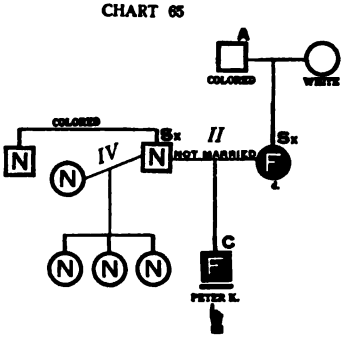


His parents visited him from time to time and seeing his improvement pleaded to take him home, which they finally did.

Nov. 18, 1910, we have the following report from the New Jersey State Prison — "Peter K. altho only 24 years of age is serving his third term here. He was last received on Feb'y. 14, 1910 to serve a term of 1½ years on a charge of breaking, entering and larceny.

"He is in good health and working on the contract, but there is no doubt that he is feeble-minded and very mischievous."

**CASE 66. DORA M.** 20 years old. Mentality 7. Has been here 9 years. American born; father half negro, half Indian, mother of German ancestry.

Dora attended public school three years; knows letters and counts to a hundred; has been fairly well trained in housework; made about the usual progress for a child of her grade, in reading, writing and arithmetic, never getting far enough to make them of any use; can sew and do fancy knitting; irons well.

A glance at the family chart shows the wretchedly bad ancestry

of this child, both morally and physically. It is the kind of ancestry that makes people generally say "What can you expect? If the child had had half a chance she probably would have been all right." But that such is not the case is evident from the fact that she came to the Training School when only eleven years old and experience proves that had she had the ability she could have been trained at that age. For the past nine years she has had the best environment and the best of training, yet it has been impossible to raise her grade. The environment, bad as it was, did not make Dora feeble-minded; it is more probable that the weak-mindedness of her parents accounted for *their* low moral and physical condition.

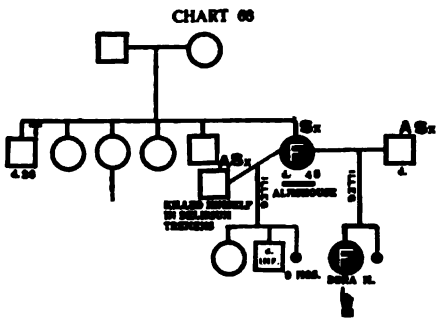


CASE 67. DAVID M. 23 years old. Mentality 7. Has been here 7 years. Born in England, of English parents. Had measles when one year old and whooping-cough at seven. The cause of the condition is assigned as "fall with thickening of the bone."

This is a pleasant boy somewhat under size but without marked stigmata. When admitted at the age of 15 he could not talk well, understood but could not explain. Was trustworthy, active, had been in public school nine years but did not know his letters. Although persistent efforts were made, he never accomplished much in the book work. A year after admission the record says—"has improved some in his English although he

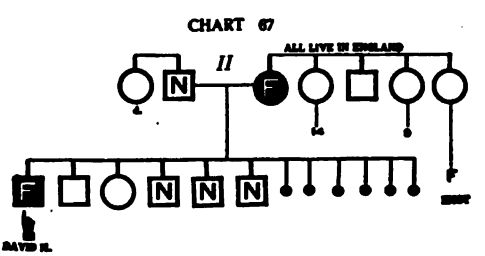

is a dreamer and gives very poor attention, does very well in number work." A year later "does not improve much in English, forgets from one day to the next all he has learned, does not know combinations to ten." It has not been possible to train him to do more than wash windows, make beds, scrub and help a little with the other children, when carefully directed. He is cheerful, affectionate, truthful, rather sensitive.

The heredity may possibly be considered a little doubtful in this case. The mother was clearly feeble-minded, was an English mill-worker; of her sibs nothing can be learned except that one died at 19 from "over-exerting his brain"; the others married and had children, one having an idiotic child.

David's mother had six miscarriages, said to have been caused by her ill health.

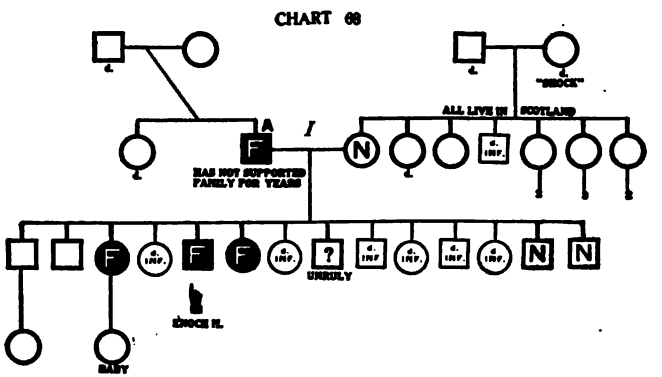


CASE 68. ENOCH M. 21 years old. Mentality 7. Has been here 11 years. American born, of Scotch parents. Had whooping-cough at the age of four, serious spinal meningitis at the age of ten. "Fall in the yard at the age of two" is said to be the cause of the defect.

Enoch is rather a sober, silent boy but willing and tries, is truthful, but very slow; never accomplished anything worth while in the three R's nor in manual training. He does very poorly in basketry, succeeds somewhat in knitting. At present is doing simple housework, has the reputation of being kind to

the little children, especially the cripples, and is a helper in kindergarten work; inclined to be moody.

His mental defect was not noticed until he was about eight years old; this was two years before he had meningitis so that can hardly be the cause and it seems to be rather late for the supposed cause of " a fall in the yard."

The family chart undoubtedly shows the hereditary character. Enoch's two sisters are defective; six sibs died in infancy, there are three that are unknown and two that are normal. The mother is normal while the father is alcoholic and feeble-minded.

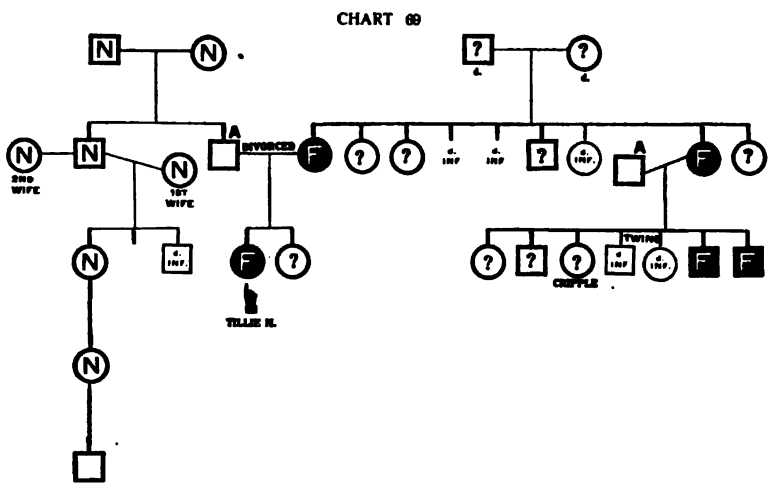


**CASE 69. TILLIE M.** 21 years old. Mentality 7. Has been here 10 years. American born, of American parents. Has had measles, whooping-cough and scarlet fever.

Tillie is a typical high grade imbecile, about average size; when she came, at the age of eleven, had never attended school; was obedient, frank, active and truthful. Under training, she accomplished little in English; had no conception of number, could spell words of three letters and write words, sometimes. Later learned to count a little but never got beyond the merest

rudiments; work in wood and in sewing is very poor, does better in the lighter housework. She is quarrelsome and stubborn, affectionate, is sometimes willing and tries; is generally easy to manage; will probably make no further advancement.

Her mother is feeble-minded, her father alcoholic; the father, however, seems to be of a good family, as all of the individuals that we know are normal. The mother's family, on the contrary, seems bad; she has a defective sister and the rest of her sibs are either doubtful or died in infancy; the defective sister married an alcoholic man and had two feeble-minded children and the rest died in infancy, or are undetermined.

CHART 70

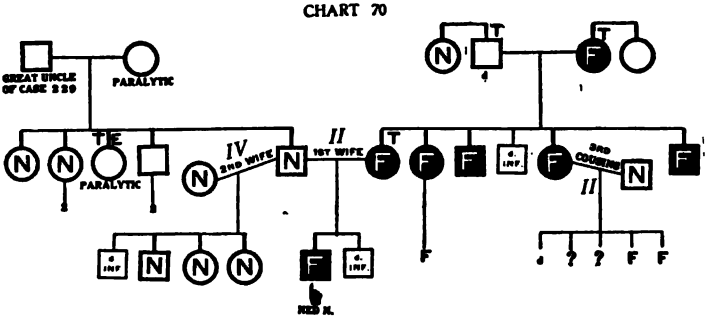


**CASE 70. NED N.** 22 years old. Mentality 7. Has been here 7 years. American born, of American parentage. Condition attributed to the mother's ill health. The birth was difficult. Instruments were used. The child has had measles, had spasms at 6 months, has had whooping-cough, had diphtheria at the age of 10.

Ned is a good looking boy, of regular features, wears glasses, is a little undersized, being about as tall as 25% of boys of his age. His hand grip is equivalent to that of 10% of boys of his age. His lung capacity is lower than any recorded. When admitted at the age of 14, he could count to eight, but did not know color, could do an errand, was fond of play, trustful and truthful. A year later it is recorded that he had "improved splendidly in basketry," showing energy and capability; is beginning to im-

prove a little in his English work; speaks plainer; always obedient; generally cheerful; work always well done; is generous, thoughtful, most helpful with boys in the cottage, fond of dress, neat and clean. A year later the record says, "is a faithful, earnest worker, but has no originality." Ned has always been a good and satisfactory boy, has made a good deal of progress in various ways. He can now, at the age of 22, read in the Second Reader. He is an excellent worker and helper in the cottage; in the carpenter shop, is reported as equal to many regular carpenters. He is cheerful, quiet and obedient; is very willing, sensitive and somewhat timid or retiring; does not speak very distinctly; is honest and truthful, sometimes a little mischievous.

The chart shows at a glance the source of the defect. His father's family is normal, but his mother is defective, and her family also, including her father, thus giving us three generations of defectives.

Attention should be called to the fact that Ned's father married twice and furthermore it was his first wife that bore him the defective child. His second wife was normal and gave him three normal children. This is significant, because it is sometimes urged that defective children are born when the parents are older and that this is somehow connected with the result. In this case, it is seen that the children that were born when the father was young were the defective ones, while those born of the second wife when he was older, are normal.

It is not without interest to note that Ned's paternal grandfather is also the grandfather of Case 229. Case 229 shows nothing in the family tree to warrant us in calling it hereditary feeble-mindedness, yet it would be possible and thoroughly in accordance with Mendelian law that this grandfather may have carried the determiners for defectiveness which appeared only under right conditions, namely, in the one case when the father of Ned married a feeble-minded woman, in the other case when the mother of Case 229, who was herself insane, and blind, married,

for her second husband, a man who was alcoholic. It is at least suggestive of what might be perfectly clear if we knew the facts, and it emphasizes what must always be borne in mind that in many a family where we are unable to discover any feeble-mindedness, there may, nevertheless, lie a recessive trait which only comes out when the right conditions are fulfilled. Case 229, in other words, may be typical of a good many that really are hereditary, although they do not show it.

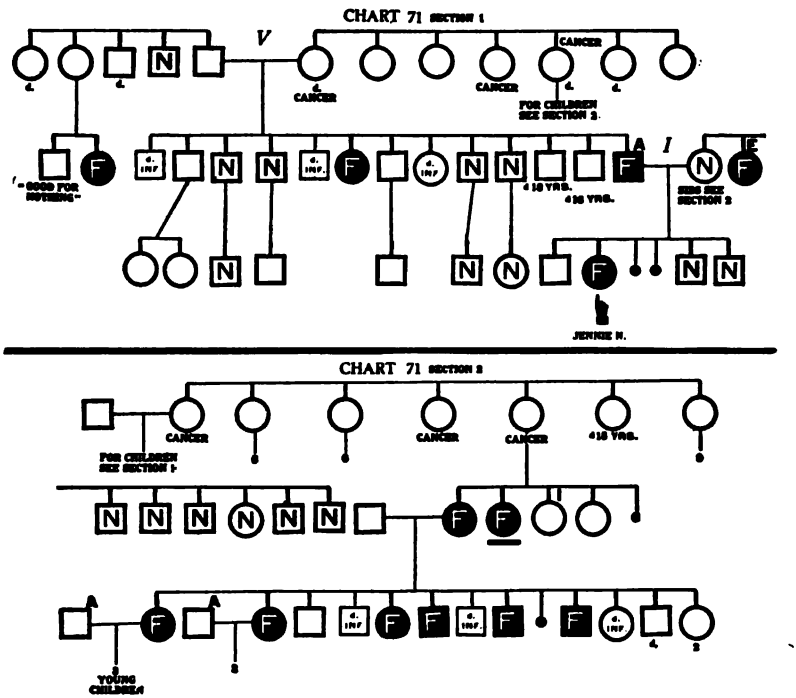


CASE 71. JENNIE N. 32 years old. Mentality 7. Has been here 15 years. American born, of American parents. Has had measles, whooping-cough and convulsions. Defect is said to be congenital, supposed to be due to the condition of the mother.

Jennie was seventeen years old when admitted, could care for herself, but not well; was obedient although she did not

understand language thoroughly; slow of speech; did not recognize color or form; knew a few letters but could not read; would start a task and forget to finish it; had been in school five years. Memory and attention poor; could see and hear well; excitable and nervous; fond of children and animals; had no bad habits; was active, truthful, easily managed. Under training she learned to read and spell very little and to count up to ten; knew green, yellow and orange by sight. In industrial work she learned to sew very nicely; could copy anything; learned to sweep and clean in the cottage; was never troublesome; made an apron without assistance.

The family chart shows unmistakably the hereditary taint. Jennie has two normal brothers, one undetermined. There have been two miscarriages. Her father is alcoholic and feeble-minded. The mother is normal but has a feeble-minded sister who is epileptic. On the father's side, a sister and two cousins are feeble-minded. These are the daughters of his mother's sister. One of these has married and has a family of fourteen children of whom six are feeble-minded and none are recorded as normal.

In the case of these cousins of the father, it is true other blood has come in through marriage and we know nothing of its character; but the fact that there is feeble-mindedness in the father's family would seem to indicate that it is this strain which is carried through in the collateral branch and it shows not only in the cousins of the father but in the next generation.

There are thirteen individuals known to be feeble-minded as against seventeen known to be normal. As one looks at the long line of unknown sisters most of whom have married and had rather large families, one shudders at the possibility of the transmission of the same defect to their children.

We have been unable to find the descendants of these people.

**CASE 72. MILLIE N.** 35 years old. Mentality 7. Has been here 20 years.

Upon admission she was excitable, nervous, obstinate, rather sulky and vulgar, gluttonous, inclined to stray away, defective in speech; could dress and undress herself, knew a little of the alphabet, but could not read; could count to 50.

In our school department, she did not make much progress; after three years, can read a few words from a chart. Industrially, she has become highly trained, so that now she can do all kinds of housework, including sewing; is much improved in disposition; has probably reached her limit in

CHART 72

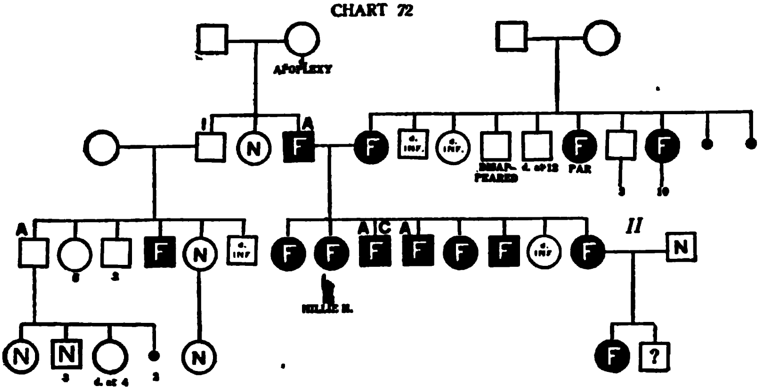


trainability; needs very careful guidance. She is not at all a bad looking woman, and if unprotected would undoubtedly pass for an ignorant but well meaning woman and might be accepted as a wife by some one who merely wanted a house-keeper. That she would become the mother of defective children, if any, is clear from the family chart. She can copy a square but is not always sure of a diamond, sometimes can copy it, but other times not. Does not always know her right and left hand. Her definitions are those of a child of six. She does not know how old she is, knows the money but cannot count the stamps. Knows colors, cannot count backwards from 20–1, nor tell the difference between a butterfly and a fly, nor paper and cloth. Can repeat the days of the week, but not the months of the year.

Both parents are feeble-minded, the father being also alcoholic. He has a normal sister. A brother was insane but was the father of 11 children, one of whom was feeble-minded, one normal, one died in infancy and the rest are unknown. The mother had two feeble-minded sisters. One of these had ten children of whom two were normal, one died in infancy; the rest are unknown. Our girl has three sisters and three brothers all feeble-minded; one other sister died in infancy. One of the feeble-minded sisters married a normal man. They have two children, a feeble-minded girl and a boy undetermined.

This seems to be a family with many peculiarities which it is difficult to unravel. Many of these people can do good work, but are erratic, often drinking, and with manifestations like insanity and yet these conditions are only temporary and perhaps are only peculiar forms of weak-mindedness.

CHART 73

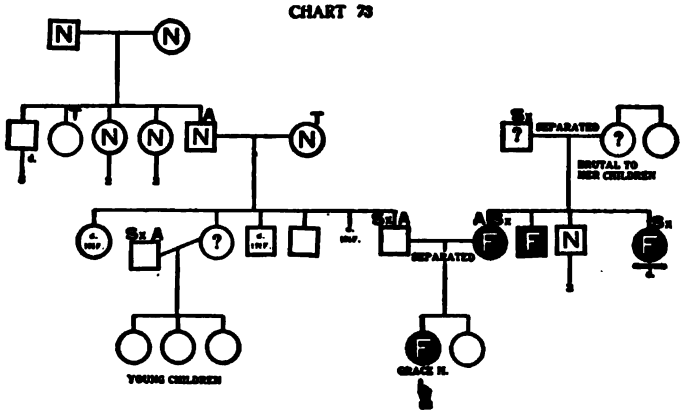


CASE 73. GRACE N. 9 years old. Mentality 7. Has been here 2 years. American born, of American parents. Had measles at four years and whooping-cough. Condition is said to be congenital from the father's alcoholism.

Grace is a rather pretty, attractive child. When admitted she spoke a little brokenly, could partly dress and undress herself; could do an errand. Under training she learned very well

in the kindergarten and has learned to do several things that she could not do when she came. Mentally, she has practically made no change in the two years.

Her Binet tests are interesting and are as follows:

| | | | |
|---|---|---|---|
| Jan. 13, | 1911 | — she tested | $6^{4*}$ |
| July 12, | 1911 | — " " | $6^{3}$ |
| Oct. 27, | 1911 | — " " | 7 |
| Jan. 6, | 1912 | — " " | 7 |
| Mar. 6, | 1912 | — " " | $7^{2}$ |
| July 22, | 1912 | — " " | 7 |
| Mar. 20, | 1913 | — " " | $6^{4}$ |

It will be noted that at the time of admission she was about seven years and three months old, and tested a little under seven, she was therefore, according to our tests, not feeble-minded. While her feeble-mindedness did not show according to the test, it nevertheless had shown in other ways, so that it was thot that the School was the proper place for her. It will be further noted that her latest testing gives her precisely the same grade as the testing two years ago, and whereas, at that time it made her only slightly backward, it now puts her more than two years backward and because she has stood still all this time there is probably no question but that she has reached her mental limit, and as the years go by she will continue to show more and more backwardness or feeble-mindedness.

The fluctuations in the mental age are of interest. Upon examination of the test sheets, one discovers several tests that seem to be on the border line; she can sometimes do them and sometimes she fails. If she succeeds, she reaches the highest point of $7^{2}$; if she fails on them all, she falls back to $6^{3}$ or $6^{4}$; sometimes she misses some and succeeds in others. The two questions most variable are — to count thirteen pennies, which she can sometimes do, and at other times not, and to draw

* This means 6 years and 4 points; 5 points would mean another year.

the diamond, in which she was once successful and on all other occasions failed. Apparently we have caught this child almost as soon as her defect began to appear.

A glance at the family history also shows an interesting condition. The mother is feeble-minded and of a feeble-minded family, but the father seems rather to be a degenerate and probably of a good family, as his ancestors, as far back as we can trace them, seem to be entirely normal. Of the hereditary character of the defect in the mother's family, there can be no doubt.

This is a very interesting illustration of what we have found in other cases where frequently children do not show their defect until seven, eight, nine or ten years of age, and from all appearances they seem to be normal up to that time. This, again, accounts for the fact that in some cases the children of two defectives appear normal while young, but show the defect as they grow older.

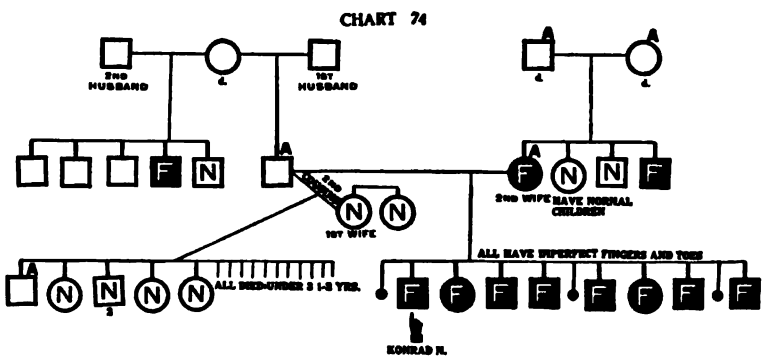


CASE 74. KONRAD N. 18 years old. Mentality 7. Has been here 4 years. American born; father German, mother American.

Konrad is a lively, cheerful boy of the high imbecile grade; full of fun, enjoys play, a willing worker; gives no trouble anywhere and always does his best, which is of course not very efficient. He had attended public school four or five years before he came to the Training School and had become able to read in

the First Reader; can count to thirty; can add a little; attention is good, imitation poor. He is improving, but only along the line of industrial work; has undoubtedly reached his limit in the reading and other book work; is improving in woodwork and basketry, can do nice ironing in the laundry and is a very good waiter boy; is a little under size but not markedly defective physically, though there are some stigmata when one looks more closely.

He does not always know his right hand, cannot count 13 pennies, can copy the square but not the diamond; repeats the days of the week but not the months of the year; cannot repeat five figures nor name the four colors.

The chart of this family repays careful study, it reveals remarkable things. The boy is the oldest of eight children, all of whom are feeble-minded. There have been three miscarriages, one accidental, two the result of drugs. The mother is feeble-minded and alcoholic; she has a brother who is feeble-minded and a normal brother and sister who have normal children; their parents are alcoholic. The father is perhaps a normal man, he has a half-brother who is feeble-minded, which is the only thing that casts doubt upon the father's normality unless indeed we take his alcoholism as indicating defect. The father was twice married, his first wife was a normal woman and they had normal children and a great many who died in infancy.

This father lacks some joints in his fingers and toes. His first family of children show nothing of this; the second family of children all show this defect.

**CASE 75. MYRTLE N.** 26 years old. Mentality 7. Has been here 11 years. American born, of American parents. Had convulsions at two years, has had chorea, had whooping-cough at the age of seven.

Myrtle came to us at the age of 15; her speech was imperfect, she could read very little and could not recognize color nor form. In addition to this she had very bad habits, morally, and was a very disagreeable and difficult girl to get

along with. She was sober, silent and morose, quarrelsome, thieving, untruthful, excitable and sly. Much effort was exerted to train her into better habits and a better disposition. She improved very remarkably in her ability; became able to read, and to write a very good narrative. Industrially, she learned to do good fancy work and to do her housework very well, and is to-day an excellent worker in the cottage with the children. But nothing affected her morals and her disposition until she was given a small child to care for. Her mother instinct, thus aroused, was made the lever by which she was forced to give up her bad habits. When she was told firmly, that at the first outcrop of

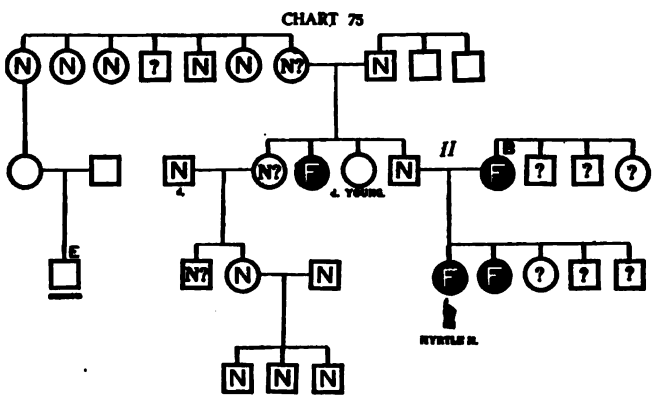


any of her old temper and bad habits, this child would be taken from her and given to someone else to care for, the result was a remarkable transformation of character. And altho the child lived only a couple of years, Myrtle has never fully gone back to her earlier condition. To-day, while not entirely satisfactory in disposition, yet she is a fairly useful Institution worker. She is not always cheerful, but is generally so. Rather good-tempered but still somewhat thieving and untruthful; has long since reached her highest development and will undoubtedly remain in her present condition for some years.

The family chart shows a large proportion of defectives. It

is probable that her four sibs are all defective like herself altho some are brighter than others. The mother is defective and the mother's sibs are questionable. The father himself is questionably normal with the probability strong that he is not quite bright.

After a look at the chart we find several others that are questionably normal. This means that if they are to be considered normal at all, they are still of low grade and rather poor representatives of the race. On the other hand certain branches of the family seem to be fairly normal and reasonably satisfactory people.

A careful study of her character shows that Myrtle is exactly the type of girl that is making so much trouble for our social workers. If she were at large in the community she would be making trouble and we should be wondering what is the matter with her.

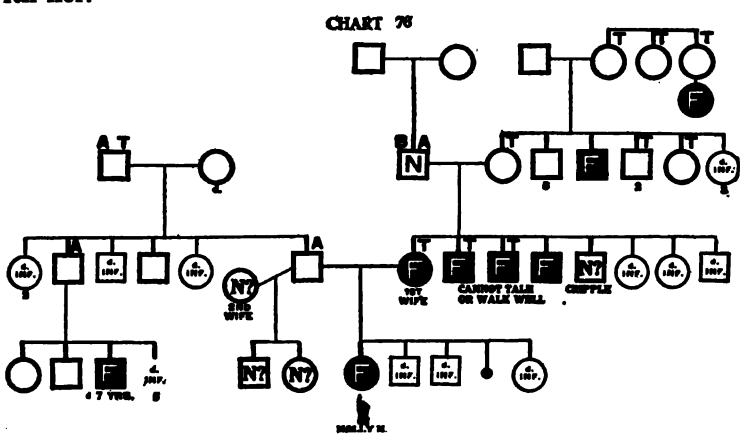


CASE 76. MOLLIE N. 24 years old. Mentality 7. Been here 13 years. American born, of American parents. Had measles at the age of seven. Mollie was a sickly baby, weighed two and a half pounds at birth; has imperfect speech, is under size, has vacant looking eyes, mouth protruding and open, always twitching.

Upon admission at the age of eleven, could not read, did not

CHART 77

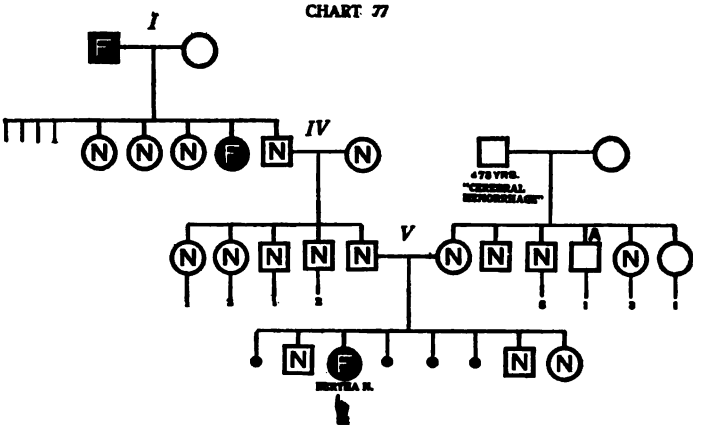


and sews fairly well. Although all of this is very awkwardly done from the standpoint of a normal person, for Bertha, it is a great encouragement to find that she can do these things. She is a very faithful worker around the cottage with anything that comes within her possibilities.

There is very clearly a weakness in the family, both nervous and mental. It would seem to be a case where there is in the family of the father a mental defect which has lain dormant for a couple of generations but which reappears, possibly as the result of the father's marrying into a family that is weak nervously.

**CASE 78. HOWARD O.** 21 years old. Mentality 7. Has been here 7 years. American born, of German parents. Had whooping-cough at the age of six years; has had sore eyes.

Howard is an interesting example of a boy who would be taken as normal by many persons who saw him at his work. He has a reticence in speech which protects him wonderfully. He keeps silent and looks wise. It is practically impossible for him to learn anything of the usual school work. Even after three years here, at the age of sixteen, he knew but a few number combinations with the aid of objects only; copied poorly; had very little idea of form. In common with most defectives he

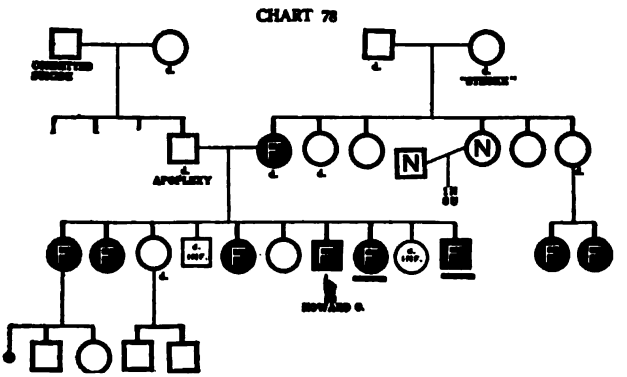


likes to be noticed, altho perhaps this is a little stronger in him than in others. He works well at whatever he undertakes, as long as the novelty of it gets him a good deal of attention and praise.

For example, in 1907, he was errand boy for about six months and when the novelty wore off he was of little use in this capacity; he would stop and talk instead of doing his errands. In 1911 again he was made a very special errand boy with a uniform and was also a phone boy, managing the switchboard, etc. This flattered him greatly and he was a great success for some time. In 1912, however, he had to be discharged from this because again he began to talk and loiter at the work; since then he has been with the electrician and doing outside work and probably he will have the same experience there.

He is inclined to be sober and silent, and sometimes stubborn. He is honest but forgetful. His left leg is quite a little shorter than the right, probably a congenital condition. This gives him an unsymmetrical attitude.

The family chart shows at a glance the hereditary character of his mental defect; it is noted that two of his sibs are in other Institutions at public expense. From the number of defective children it would seem probable that the father as well as the mother was feeble-minded.

CHART 79

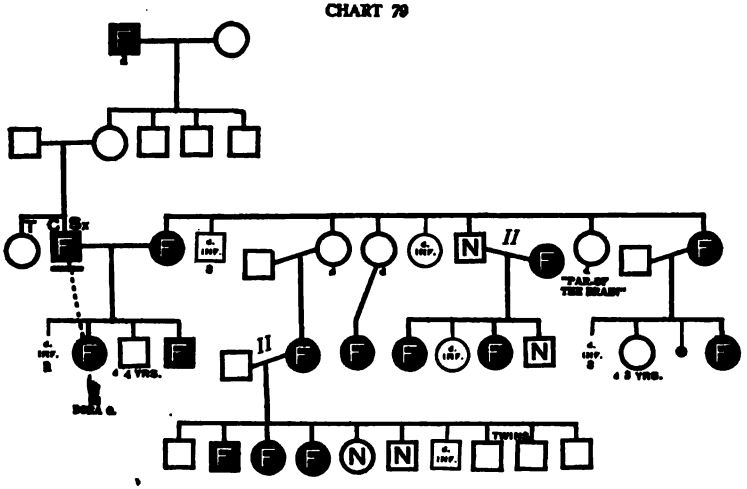

**CASE 79. DORA O.** 15 years old. Mentality 7. Has been here 4 years. Birthplace unknown, nationality of parents unknown.

This is a high grade child of the type very commonly seen on the street among the poorer classes. When admitted, she talked distinctly and much; poor memory; could sweep and dust and help around the house; has improved a little under training but it is very slow; can write a few words very illegibly; needs constant watching; has learned to do some simple sewing; can do practically nothing in school work; has improved in basketry and some in sewing; has a violent temper and when she gives way to it, scratches and swears.

As will be seen from the chart, this is a very bad family. Wherever anything is known of its members, they are as a rule defective, very few normal people having been found. The father and mother are both feeble-minded. The father is sexually immoral and is serving a ten years' sentence in States Prison for carnal abuse of this child. His parents are undetermined but his maternal grandfather was called "crazy," or "always a little off" — probably feeble-minded. A sister of this child's mother

had a feeble-minded daughter who in turn had a family of ten children, of whom at least three are feeble-minded. Another sister is a moron and has at least one feeble-minded child. None are normal. A brother was normal, but married a feeble-minded woman and had at least two feeble-minded children. It is very evident that the defect runs through the family and there would be many more black marks if more facts could be learned.

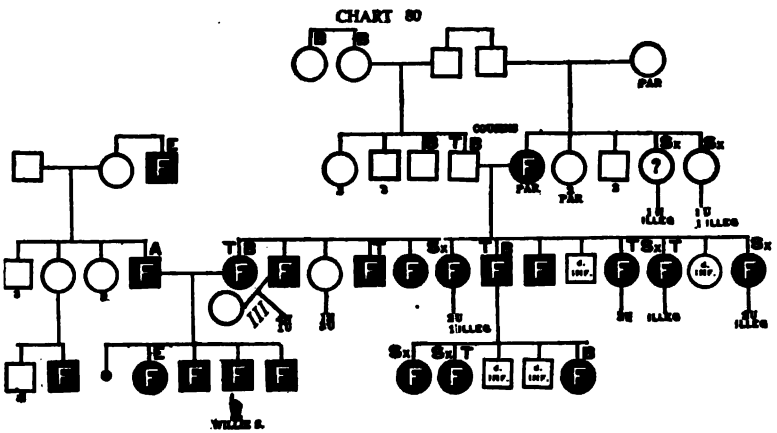


CASE 80. WILLIE S. 32 years old. Mentality 7. Has been here 15 years. American born, of American parentage. He has had measles, mumps, whooping-cough, diphtheria and tonsillitis; has never been ill since he has been here.

When he came, had been at school 6 or 7 years, was below average in size and weight, could wash and dress himself; understood a command; knew the alphabet but could not read; wrote a few words; was fond of horses, could harness and drive them. Parents expected him to become self-supporting. He was placed in the school department and after a year could print his first name from memory and his last name from copy. Two years later it was reported that he made no improvement. Was called a "don't care" boy; could read the first page on a chart and count to 20; could write his name from memory; knew color and form.

He is, at present, a good Institution helper, does housework and laundry work quite satisfactorily, under direction. He is generally cheerful, rather silent, sometimes quarrelsome and stubborn, but usually obedient; willing and tries; is slow.

He can copy a square but not a diamond. He cannot count 13 pennies nor show his right hand nor left ear; can repeat the days of the week, but not the months of the year; defines by use; cannot count three one-cent and three two-cent stamps; can remember only four figures.

His chart shows both parents feeble-minded, father alcoholic, mother tuberculous, and blind or at least approaching it. This is a very mixed family. Some of the children are decidedly defective, one is epileptic; another one is relatively quite bright. The father's uncle was feeble-minded and epileptic. He had also a nephew that was feeble-minded. Of the rest, little can be found. The mother had a large number of feeble-minded brothers and sisters. They suffered from tuberculosis and there is a good deal of blindness in the family, even for three generations back. There is also a good deal of sexual perversity, nearly all of these people having borne or begotten children out of wedlock. The mental condition of these defectives varies all the way from very low grade, well marked idiots up to high grade morons and border line cases.

CASE 81. **FRANCES T.** 27 years old. Mentality 7. Has been here 14 years. American born, of American parents. Assigned cause "meningitis," which she had at the age of six months. The child also had convulsions at the same time. Has had measles, whooping-cough, scarlet fever and bronchitis.

Frances is a very good girl of medium intelligence altho the teachers say it would take her months to memorize four lines. She is cheerful, affectionate, obedient; willing and tries, truthful. The limit of her ability in reading and counting is the ability to read "the apple" in the primer, to count to ten and to add by twos; in manual training she is not very good, she spoils

CHART 81

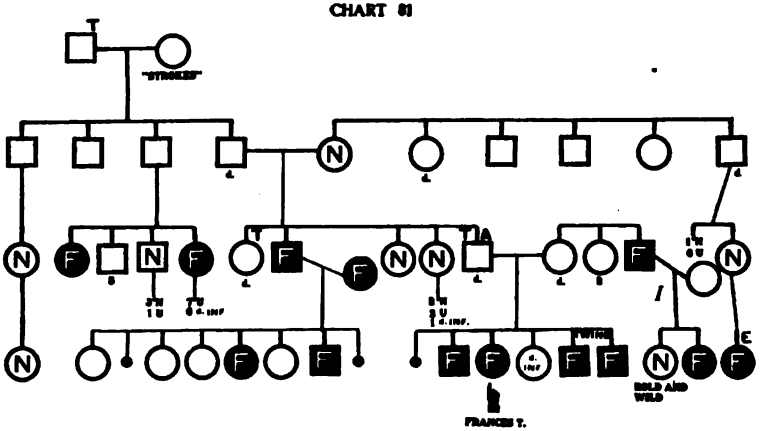

a great many pieces. She embroiders very well and is fond of sewing, does something at this; knits very well. She is a very slow worker, but tries hard; does housework and waits upon the table, tho poorly.

There seems to be nó doubt about the hereditary character of the defect, even though her father and mother are undetermined; there are enough others in the family who are known to be defective to show that it is in the blood.

Her father was alcoholic and tuberculous, said to have been gay and fond of fast horses and women.

**CASE 82. GARDA T.** 29 years old. Mentality 7. Has been here 10 years. American born; nationality of parents unknown.

Garda has rather a pleasant face and good physique; has been somewhat trained; is an industrial helper; works in the cottage and laundry. She cannot do school work at all, but does good laundry work and cares for the more helpless children. She has fair memory, good imitation, laughs and cries without cause; is heedless of danger, active, obstinate and passionate, destructive and selfish.

The chart shows an unusually bad family, a large proportion of them are distinctly feeble-minded and a number of others are

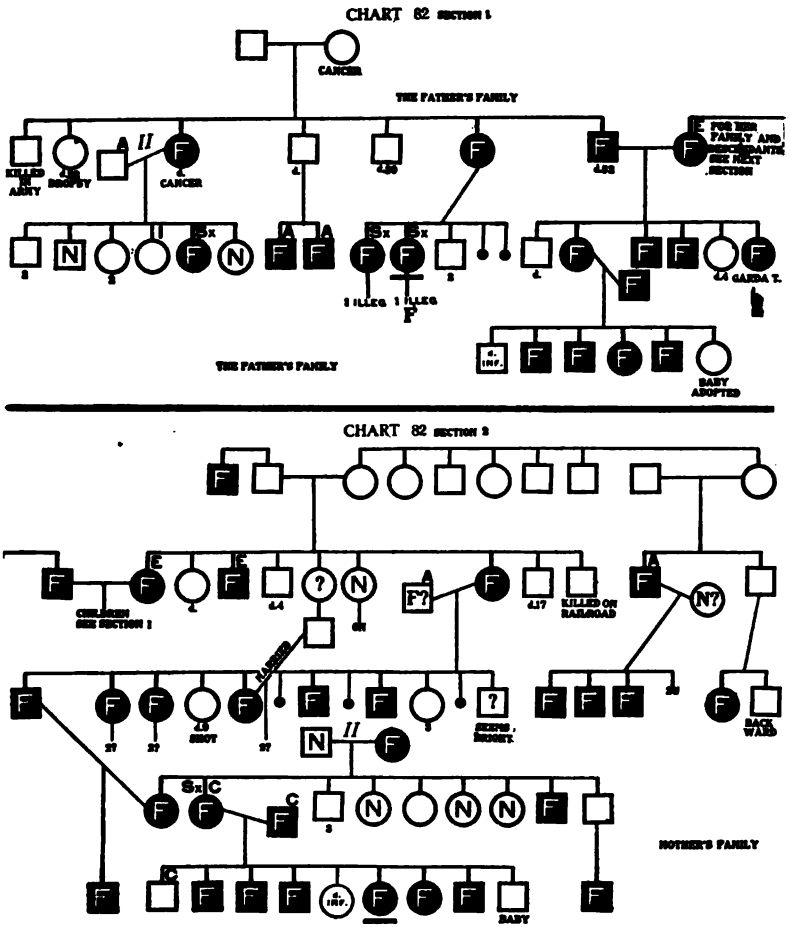


doubtful, but with a strong probability of defect. There is some epilepsy, some insanity, some criminality and some alcoholism in the family. There are forty-five people represented on this chart, who are feeble-minded, and even this appalling number would be somewhat increased if we included some doubtful ones; a number of these are, or have been, in public Institutions at public expense.

**CASE 83. DAVID AND NANCY X.** David is 31 years old. Mentality 6. Nancy 29 years old. Mentality 6. Have been here 19 and 20 years respectively. American born and of American parentage.

Of David it is recorded when he entered the institution: "Can dress and undress himself; speech is slow; knows color; attention poor, imitation poor; does some housework; is indolent, untruthful and destructive, cannot read nor write, has been considered insane, has been in school four or five years with no improvement." After admission, he constantly improved. At one time, he was making the most progress of any boy in his group; gradually grew less stubborn and became helpful in dormitory and kitchen.

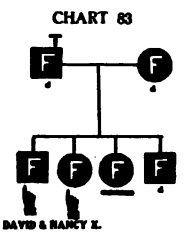


At present, can sweep and scrub, polish shoes, saw wood, dig dirt, cut grass and do things that require only a little judgment; can write a letter, but it is badly spelled and badly constructed; is cheerful, sober, silent, stubborn, quiet, obedient, willing and tries, truthful and slow, quick-tempered.

Nancy, upon admission, could neither read, write nor count. Recognized color and form, was fond of music. Memory was poor and attention fair. She could do some housework, was excitable, nervous and inclined to be indolent. In the school department her progress was slow. In one year, she had learned only to write A and print A, H, Y from memory. Five years after admission, she knew the alphabet and could get correct answers to mental arithmetic, *when she had the objects before her.* At present she can write about the same kind of letter as her brother; gets along well with the girls; does very good house work; is at times cheerful, sober, silent, cranky, quarrelsome, stubborn, active, quiet and obedient, obstinate, willing and tries, truthful, slow, quick-tempered, thieving, excitable; has bad habits.

But little is known, or could be found out, about the family,

CASE 83, DAVID X., AGE 31. MENTALLY 6.
CASE 83, NANCY X., AGE 29. MENTALLY 6.
CASE 85, HERMAN C., AGE 28. MENTALLY 6.

but what there is, is all bad. The father and mother were both feeble-minded. A sister, feeble-minded, is in the State Home for Women. A younger brother is said to have been killed on the railroad. The father was a cripple who made and sold shoe strings, on the street, for a living. They lived in an upstairs back-room in a little house on an alley in Philadelphia. The girl, who is now at the State Home, was taken into a farmer's family where she did very well until they moved to the city and opened a milk-shop. It was impossible for her to make change for a pint of milk; besides the family feared for the child as she matured, so she was sent to the State Home.

CHART 84

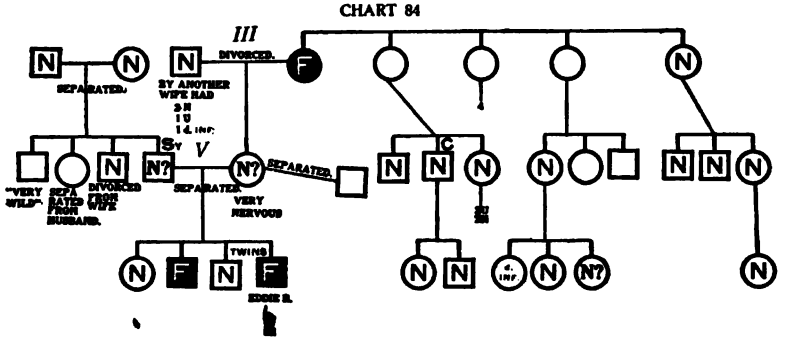


**CASE 84. EDDIE B.** 13 years old. Mentality 6. Has been here 3 years. American born, of American parents. Had measles at the age of six.

Eddie is an ataxic case and has very poor control of his limbs and speech organs; has made considerable progress since admission and can get around better; can even weave a mat and sew cards.

He is cheerful, active and obedient, very affectionate, rather excitable, very sensitive; tries hard to talk but the ataxia extends to his vocal organs and he cannot be understood.

The family chart shows the hereditary character of the defect. The maternal grandmother was feeble-minded and it is clear that

this has been transmitted thru the mother to our boy and his older brother. It might be urged that the syphilis of the father was the cause of the defect, but how then shall we account for the two normal children, one of them being Eddie's twin?

This situation of twins, the one normal the other feeble-minded, is hardly to be explained on any other basis than heredity. The syphilis of the father would most certainly act upon both alike.

There is nothing else to be noted in the family, except perhaps the very frequent number of divorces and separations which may be significant in themselves.

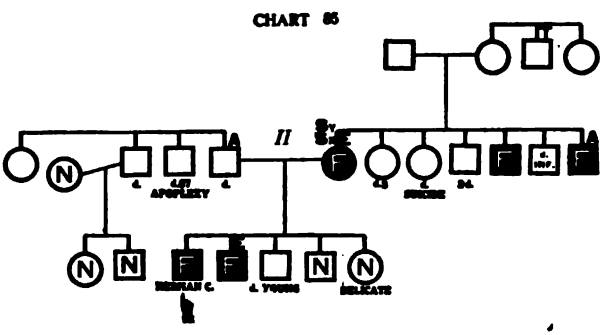


CASE 85. HERMAN C. 28 years old. Mentality 6. Has been here 20 years. American born, of American parentage. Has had catarrh and tonsillitis. Assigned cause "unfavorable environment, gross neglect from birth."

Herman came, at the age of eight, from a boys' lodging house of the S.P.C.C. He soon took an interest in the more helpless children and assisted them up and down stairs and when out walking. He never succeeded in doing anything with the three R's, and must have constant review to remember what he learns. When he was fifteen, it is recorded he would shovel coal well when watched, otherwise would shirk it. He now works at the barn and has to be managed rather tactfully as he has a violent temper when roused. He is well developed physically.

Herman is the first born of a family of five. The next younger is also feeble-minded and epileptic. The next died at four years. The last two are possibly normal. The father of this family was alcoholic, but nothing else is known. The mother was feeble-minded; a very low grade, degenerate woman; syphilitic, and sexually immoral. She had two brothers, feeble-minded like herself, five other sibs undetermined, including one who died in infancy and one that was a suicide for love. This case is distantly related to Case 102.

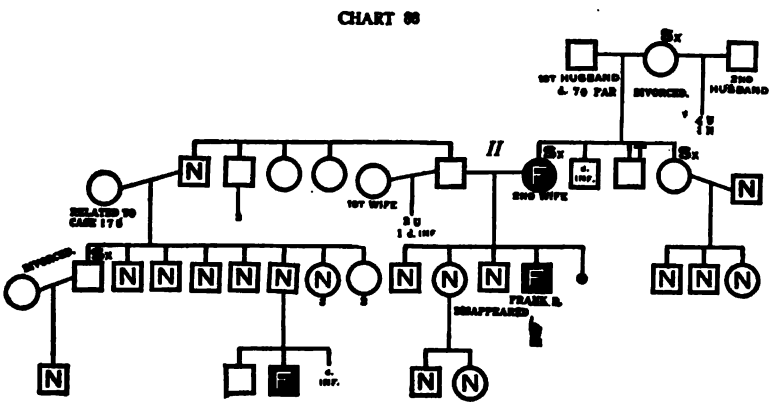


**CASE 86. FRANK D.** 24 years old. Mentality 6. Has been here 10 years. American born; father English, mother American. Had scarlet fever at the age of four years, which is supposed to be the cause of the defect.

Frank is rather a helpless, useless sort of a boy, talks a great deal and is profane, cannot do any kind of work; is cranky and quarrelsome at times, other times cheerful. He is very slow to act but quick-tempered; has bad habits; was fourteen when admitted, and then it was said his capacity was "nearly normal." Now he knows all of his letters, is fond of music, sings many songs; memory poor, attention slight, imitation good; is left-handed.

Frank's family history is one that leaves much to be desired in the way of positive data. It is clear that his mother is feeble-minded and sexually immoral as well. Nothing else is known

about her family except that a sister was immoral like herself, as was also the mother.

Frank's father is undetermined, he, however, had a normal brother who has a feeble-minded grandson. It is altogether a low grade family and there can be no doubt of the hereditary character, altho not many of the defective individuals have been found.

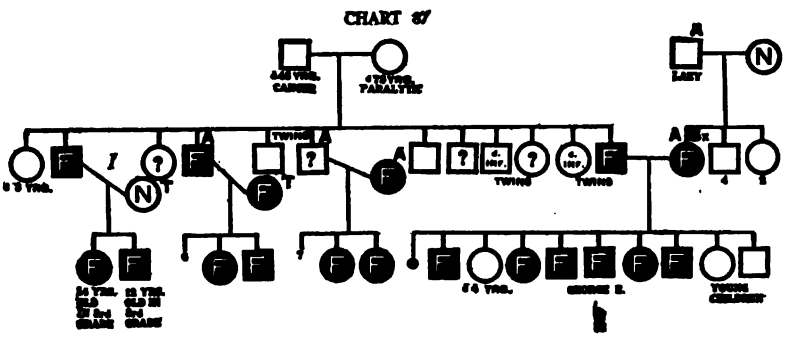


**CASE 87. GEORGE E.** 14 years old. Mentality 6. Has been here 7 years. American born, of American parents. Had an attack of diarrhœa at the age of seven months; has had marasmus and *phthiriasis capitis*. Assigned cause of his condition is the diarrhœa resulting in hydrocephaloid state.

George has the appearance of a bright little boy of eight years of age. He did not begin to talk until four and has never learned to talk plainly. He has never gotten beyond the kindergarten in his work and for some time has made no improvement; can memorize the words of songs and go thru the motions of singing them. He is cheerful, but quarrelsome and stubborn; active, affectionate, quite excitable, destructive and mischievous; has rather a strong tendency to kick and bite other boys.

George's condition is clearly deep seated and hereditary; the sickness referred to was probably an incident in his early life. The family are strongly defective and have for years been objects of charity in their neighborhood.

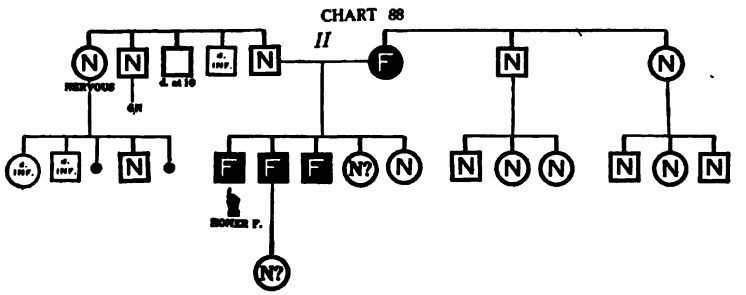


**CASE 88. HOMER F.** Deaf. 28 years old. Mentality 6. Has been here 18 years. Born in Germany, of German parents. Deafness supposed to be due to congestion caused by whooping-cough. He had whooping-cough at the age of two months, measles at six years, eczema at twelve years, spasms at thirteen years.

Homer can say about twenty words; has learned a little in number, can subtract, for instance, four from seven, or add four and three with objects; is a fairly good industrial worker about the cottage or in the laundry; can do good work when he tries but gets careless and stubborn; is cheerful but quick-tempered; somewhat quarrelsome; is fond of other children and is generally agreeable to those about him; is fairly good at impersonating other boys. The deafness does not seem to be hereditary, at least none has been found in the family. The mother is feeble-minded as are also two of Homer's younger brothers; two sisters are perhaps normal. The father is normal but a weak, easy-going man; he has a sister who is considered normal, but of her five children only one lived, two being still-births and two early deaths.

**CASE 89. JENNIE G.** 20 years old. Mentality 6. Has been here 11 years. American born; father German, mother Norwegian. Has had measles, whooping-cough at the age of four, scarlet fever at seven.

At the age of nine, when admitted, Jennie could partly dress herself; understood language, but not always a command; could count to ten; recognized color and form; was obstinate

and passionate. A year later she was doing simple kindergarten work, was rather timid; could sew, and cut out pictures; liked to knit on a spool and sew on buttons. Three years later she was spelling words like cat, mat, etc., could form a few letters, could braid raffia, knew the value of 1, 2, 3, and 4, and could count to 20; could sew nicely. Two years later the report is, "a little better in basketry, is incapable of progress in English work, sewing good." Three years later "no improvement mentally and little manually." That was in 1909 and there has been practically no change since. She is sober, rather quarrelsome, seldom smiles; is slow, obedient, altho sometimes obstinate.

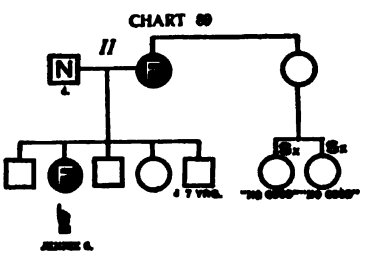


This is almost certainly a hereditary case. Jennie is the second born of five children. The youngest died at seven, the other three are in homes somewhere, but no one knows where. The father was probably a normal man. He was killed by a fall. The mother is feeble-minded. The mother's sister had two daughters, both of whom were immoral women. Nothing further is known of the family.

**CASE 90. HAROLD H.** 19 years old. Mentality 6. Has been here 7 years. American born, of German parents. Has right-sided inguinal hernia. The child is a cheerful, good natured, high grade imbecile of normal height and weight, good face and physique.

Although carefully trained in our School Department for several years, the child has never been able to make any great progress. He can recognize a few figures and count a little. Industrially he does a little better but has never been able to learn anything complicated. He is an errand boy, going from cottage to cottage and does this fairly well. He is apt to giggle when spoken to, and at times is very silly, but on the whole is a general favorite in his group.

CASE 89, JENNIE G., AGE 20. MENTALLY 6.
CASE 92, HARRY I., AGE 26. MENTALLY 6.
CASE 94, LOTTIE I., AGE 22. MENTALLY 6.

The chart shows the cause of his condition.

An older sister is feeble-minded and has had an illegitimate child that died. The mother and one of her sisters are feeble-

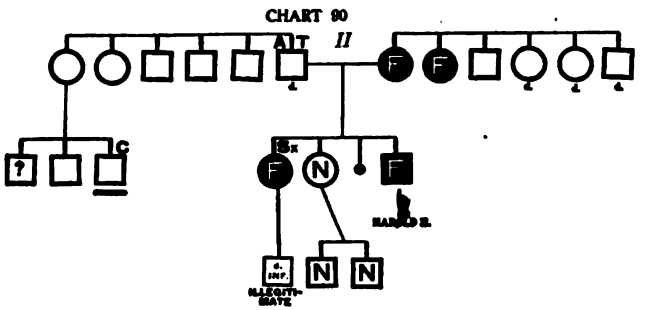


minded. The father is alcoholic and tuberculous. A paternal aunt of Harold's had three children, one of whom is criminalistic and in jail; another is spoken of as being lazy. It is possible there is some mental defect here also.

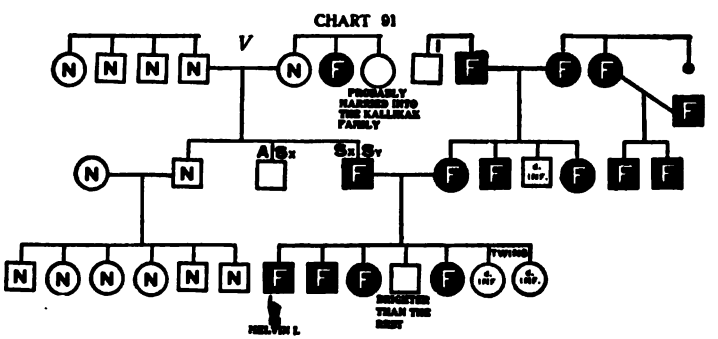


**CASE 91. MELVIN I.** 14 years old. Mentality 6. Has been here 4 years. American born, of American parentage. Has had convulsions, measles at the age of 6 years and has had scarlet fever.

When admitted two years ago, he could dress and undress, could not read, was very excitable and nervous, had no results from two years in public school. Since coming here has improved

very much; is very fond of gardening; can sew and weave nicely; is hard to manage because he is very peculiar; cries at the slightest correction but does not heed; is improving. An attractive little boy, works nicely in the kindergarten, takes direction very well.

Both parents are feeble-minded, father sexually immoral, and syphilitic, with a brother who is alcoholic and also immoral. Another brother, normal, married a normal woman and had six normal children. The mother has a feeble-minded brother and sister. The parents of these three were also feeble-minded. The mother has a feeble-minded sister who married a feeble-minded man and they have had two feeble-minded children. The father had a brother who was insane.

Melvin's paternal grandfather is normal and belongs to a large normal and highly respectable family, but he married a woman who had a feeble-minded sister. That was his undoing. She transmitted her family defect to their son, the father of our Melvin. Our boy has a feeble-minded brother, two feeble-minded sisters, two that died in infancy and one who is "brighter than the rest."

The paternal grandmother's sister whose mental condition is undetermined probably married into the Kallikak family. She has the same family name and lives in the same locality, but we have been unable to make the connection.

This is a striking chart eugenically, as it shows a man of excellent family marrying a woman who was normal, to be sure, but who had an imbecile sister whose defect was probably hereditary. Of their three children, one was normal, one certainly defective, the third probably so. The defective one in turn married into a very defective family with the result that our child and his brothers and sisters are defective.

**CASE 92. HARRY I.** 26 years old. Mentality 6. Has been here 18 years. American born, of American parentage. Had none of the children's diseases; had convulsions once or twice when young.

When he came here was considered a nice looking child, seemed very bright; did not talk, but was fond of play and company; was reported as being double-jointed. Two years later, he had become a great talker, altho his speech was thick and somewhat indistinct, this is probably due, in part at least, to a very large, thick tongue. He is somewhat restless and difficult to manage; stubborn.

At present, he helps a little in the care of low grade children. He scrubs and dries dishes. He is considerably below any normal person of his age in height and weight, his grip and lung capacity are still farther below normal.

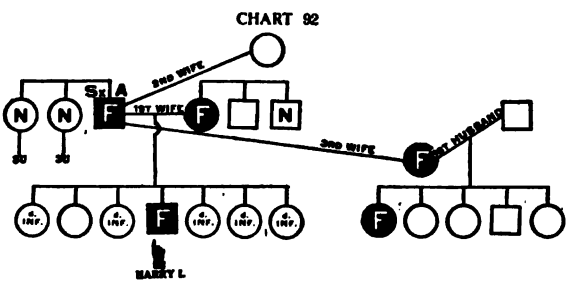


He can copy the square but not the diamond; can count thirteen pennies and recognizes colors; cannot tell the difference between wood and glass, or between butterfly and fly; cannot remember five figures; is cheerful, but quarrelsome, excitable and quick-tempered, somewhat given to thieving, destructive and mischievous. Can repeat some songs that he has learned; has a good memory. His habits are bad and cannot be improved.

Our knowledge of his family does not cover a great many individuals, but enough to establish the fact of hereditary feeble-mindedness of rather a low grade type. The father, especially, is said to have been a dwarf physically and completely deformed in character. He is feeble-minded, alcoholic and sexually immoral; has had three wives. The first wife, the mother of Harry, was feeble-minded but had a normal brother. From this marriage there were seven children of whom five died in infancy and one is unknown. The second wife is unknown. The third

wife is feeble-minded, had been married before and by her first husband, had at least one feeble-minded child. Four others are undetermined.

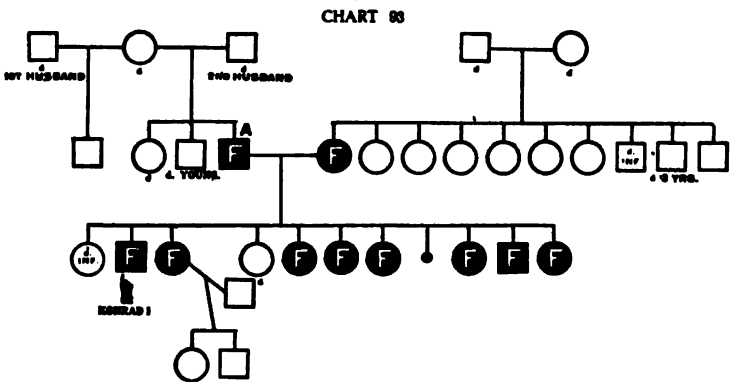


**CASE 93. KONRAD I.** 32 years old. Mentality 6. Has been here 14 years. American born, of American parentage. Was a strong baby. Learned to talk at three years of age, altho his speech was defective. He had convulsions when he was two or three years old.

Upon admission at the age of 18, his speech defect was noticeable. He could not read nor do any arithmetic; knew some colors; was fond of music; could wash dishes, cut wood and care for horses; inclined to run away; was careless, indolent, passionate and filthy.

He was placed at once in the school department but was an entire failure. He could do no school work. He could do excellent gardening and a little woodwork.

At present, he does fairly well helping the mason; works in the kitchen and on the farm. He is cheerful, rather sober and silent, obedient, affectionate, somewhat timid, willing and tries, is truthful, somewhat excitable and sensitive, forgetful, generally good-tempered.

Konrad's father and mother are both feeble-minded, the father being also alcoholic. The mother belongs to a large family but

nothing could be determined as to their mentality. Konrad has had seven feeble-minded brothers and sisters, one died in infancy, one died of black diphtheria, and there was one miscarriage. Some of them are of higher mentality than Konrad.

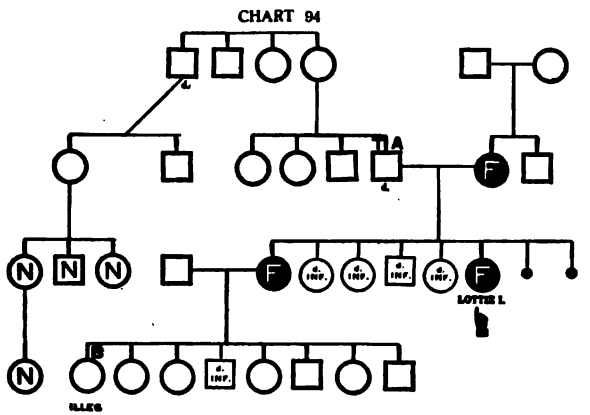


**CASE 94. LOTTIE I.** 22 years old. Mentality 6. Has been here 12 years. Was born in America; father German, mother Danish. Small of stature, equal to about ten per cent of children of her age. Has microphthalmic eyes which are in constant motion; vision probably very poor.

Upon admission at the age of ten she could dress herself excepting the buttons; could undress; was said to understand English, German and Danish languages; understood commands but was not very obedient. Her teeth were very imperfect; talked very little; could count to ten or fifteen and copy a few words; could sing a little; memory poor; could do errands, and wash dishes; was left-handed; not very affectionate; fond of play; had spent three years in public kindergarten with no results.

She improved somewhat under training, was able to group pegs as high as six, could count to ten; learned to sew a little; wove a basket; had a violent temper which made it necessary to take her out of school; was stubborn and sulky at times;

was never able to do as much as her intelligence seemed to warrant, partly, perhaps, on account of her eyes which in turn may have affected her disposition, at least the latter is bad.

That her mental defect is hereditary is evident from the chart, where we have at least three feeble-minded persons. Of the father's family practically nothing is known except that he himself was alcoholic and tuberculous and died of cancer at the age of fifty-three. This is one of a number of charts that show that alcoholism in one of the parents results in a great many early deaths. Here we have a feeble-minded mother and an alcoholic father — two children feeble-minded, all the rest of the eight were either still births or died in infancy.

It is further interesting to note that there seems to be some hereditary eye trouble — as our child's mother and grandmother are both reported to have weak eyes, while an older sister of Lottie's had eight children, one of whom is reported to have been blind.

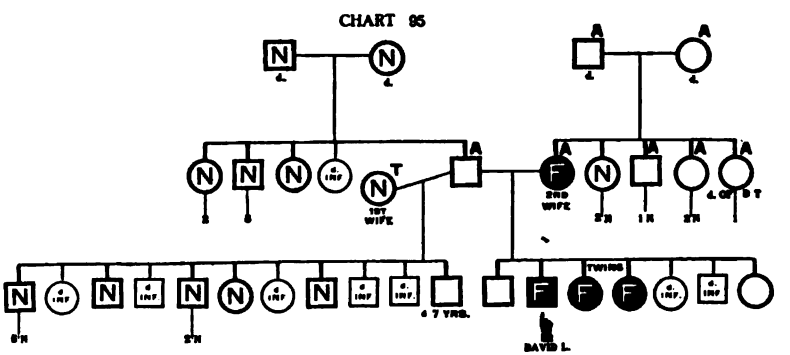


**CASE 95. DAVID L.** 22 years old. Mentality 6. Has been here 7 years. American born, of American parents. Has had whooping-cough.

David is a curious little fellow, very much under size, with very defective eye-sight; is very quiet, takes everything as a matter of course; has not been able to learn anything worth mentioning, in the line of book work; says very comical things;

CASE 95, DAVID L., AGE 22. MENTALLY 6.
CASE 96, FREDA M., AGE 23. MENTALLY 6.
CASE 97, KARL N., AGE 29. MENTALLY 6.

deceitful and has to be closely watched; is thieving and not truthful. As usual in one of her mental age, does very little in number work or in reading and writing. Industrially she accomplishes something; can do house and laundry work; has some ability in this direction but is lazy; is a rather cheerful, good-tempered girl, somewhat loud spoken and talks much; no special stigmata and is not wholly unattractive; would easily be picked up by some man not much above her in intelligence; the probable consequences are easily deduced from a view of the family chart. There we see, altho many of the individuals are undetermined, enough to satisfy us of the hereditary character of the defect. The mother is undetermined but her twin sister was feeble-minded. The father is undetermined but is spoken of as being a "brute."

Freda is one of six children and there were some miscarriages, the cause of which could not be obtained.

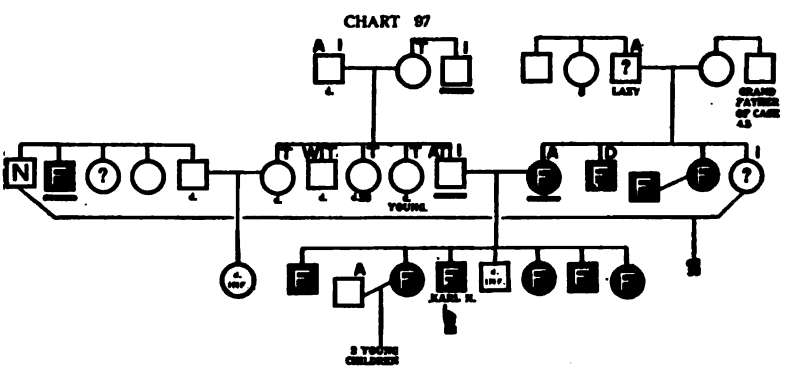


CASE 97. KARL N. 29 years old. Mentality 6. Has been here 11 years. American born, of American parents.

Karl was eighteen years old when admitted. At that time it is recorded that he understood language and was obedient; spoke well; could not read nor count; attention poor; could do simple errands. Under training he learned slowly but usually

remembered what he learned; could write several sentences; was fond of horses, dogs and cows; has no further record of school work but we find him on the farm.

The following account from the dairyman will give as good an idea of Karl's capacity as a longer description.

"Karl is a sort of an all-around man, chicken man, pig man, ox driver, milker and talker about nothing. He will say he can fool most any cow in the barn. When the regular milker is absent, Karl takes his place (if the chickens or pigs can spare him) and because he treats the cows kindly, as most of the milkers do, he gets lots of milk. It is a hard job to be an extra milker and get as much milk from a cow as the regular milker; Karl does it most of the time and the cow thinks Karl is the regular milker.

Under supervision Karl is a good worker, and is quite useful. He is quick-tempered, inclined to be stubborn and sober; is thieving, very sensitive, and very slow.

The family chart shows at a glance that we are dealing with a mentally defective family, with the feeble-mindedness in at least two generations. There is combined with it insanity and alcoholism and also a large amount of tuberculosis. Furthermore, this family is related to the maternal grandmother on Chart 43, where the grandfather is a brother of this maternal grandmother. Thus we have in the Institution two children from the same ancestry who previous to our investigation were not known to be related.

**CASE 98. DAVID Q.** 24 years old. Mentality 6. Has been here 15 years. American born, of German parents. Had spasms at the age of three months. Assigned cause "the method of nourishment, condensed milk."

David is a very good boy of medium intelligence; is very near-sighted. At the age of nine he could dress himself but poorly, could not wash himself. He has never succeeded with the three R's but has become a very good industrial worker.

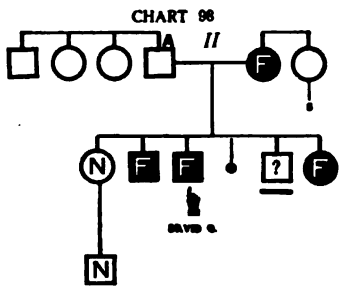


He has a very bad disposition which he has, however, learned to control to quite an extent; he is cheerful and generally obedient, rather quiet, not always truthful, altho not especially noted for the opposite quality.

The chart shows that without doubt this case is hereditary, thru the mother's family. The father is alcoholic. A younger brother is in the Reformatory and may possibly be defective.

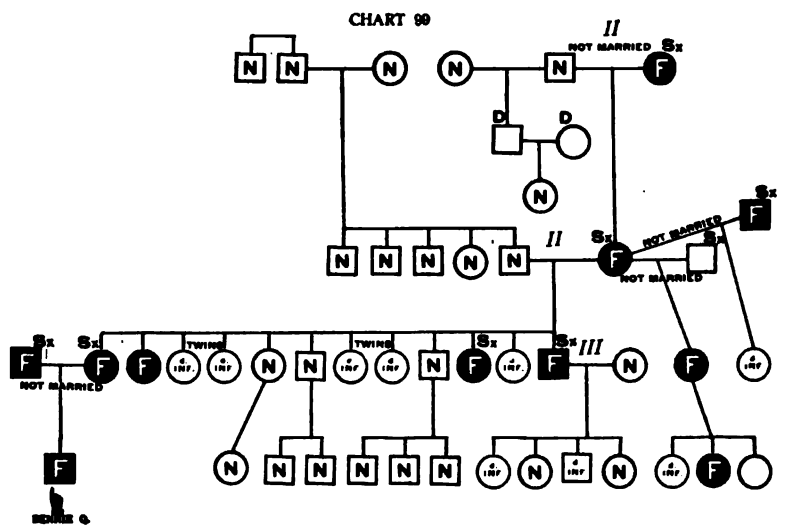


**CASE 99. BENNIE Q.** 14 years old. Mentality 6. Exact birthplace and that of his parents unknown — probably America. Has had measles, scarlet fever and eczema.

He has been in the Institution 7 years. When he came his head was noticeably large. He was of uncertain gait, excitable, laughed without cause; strayed from home; was obstinate but affectionate; fond of children and play. The following year it

was reported that he would improve steadily under instruction. This, however, has not proved to be the case to any great extent. He is still in the kindergarten, partly because he is small of stature and seems more like a kindergarten child; does practically nothing in book work, very little in hammered brass or basketry; seems to try, but has very poor memory; does not progress.

He cannot copy either the square or the diamond; can do the three errands, but does not know his right hand and left ear. He recognizes colors, sees the lack in the unfinished pictures, describes pictures, but cannot count 13 pennies, cannot repeat five figures; has only $\frac{6}{20}$ vision in each eye. His hearing is about normal. Asked to write his name, he makes nothing but scribbles; is full of mischief and is always getting into trouble; is a great talker, but his speech is very thick and indistinct; is cheerful, quarrelsome, stubborn, active, not always obedient, restless, affectionate, excitable, quick-tempered, destructive; has had adenoids removed, but it did not seem to improve him. In standing height, he is equal to less than 10% of normal boys of his age; in weight, about 35%. Will-power, as shown by the dynamometer, is much below normal.

Both parents are probably defective. The only doubt lies in the fact that the mother was a prostitute, and so there is some uncertainty as to who was the father. It is generally supposed, however, that he is a certain person who is known to be defective.

The mother has two sisters and a brother feeble-minded, and one sister and brother are sexually immoral. There are two brothers and a sister who are normal, and have normal children. The rest of the family, including two sets of twins, died in infancy. The oldest brother married a normal woman and they had four children, two of whom are normal and two died in infancy. The maternal grandfather's family seems to have been perfectly normal. The maternal grandmother was feeble-minded and had children by two other men, one of whom was feeble-minded. By one

of these she had a daughter who was feeble-minded and she in turn had three children, one of whom is feeble-minded and another died in infancy. The maternal great-grandmother was also immoral and feeble-minded.

This is a charity case; the mother herself was placed out by a Home Finding Society, and when this child was born, there was considerable uncertainty as to his parentage. He has been placed in the Institution and is provided for by a Charitable Organization.

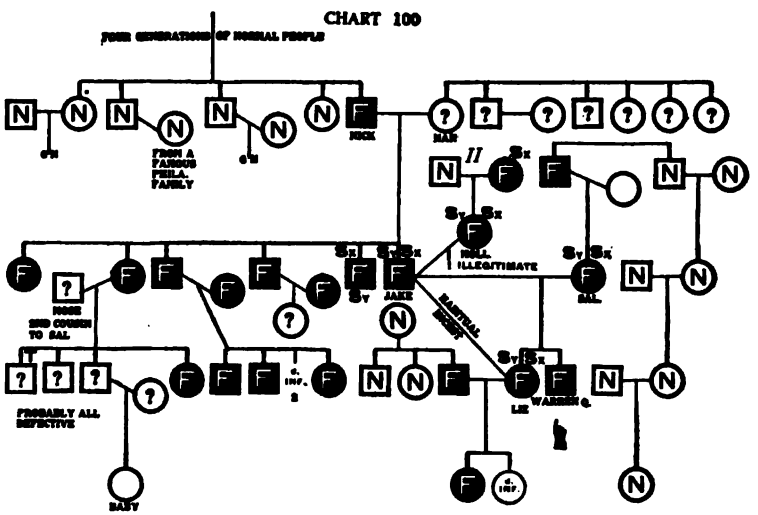


CASE 100. WARREN Q. 24 years old. Mentality 6. Has been here 7 years. American born, of American parents. Had whooping-cough at the age of four and measles at seven. Assigned cause of the defect, "serious fall of the mother."

Warren was about eighteen years old when admitted. He began to talk at the age of five; did not understand a command; did not talk plainly; had no knowledge of form; memory poor; attention fair; was inclined to stay away from home; was heedless of danger. He had been in public school a little, but knew no letters; counted only to ten; could not add; had sold papers for

CASE 99, BENNIE Q., AGE 14. MENTALLY 6.
CASE 100, WARREN Q., AGE 24. MENTALLY 6.
CASE 101, WILFRED Q., AGE 26. MENTALLY 6.

six years. Whether Warren was unusually incapable of learning because of an exceptionally bad memory, or whether he was too old when he came to us, we do not know, but nothing could be done with him in the School Department, and he has never been able to learn to do anything more than the coarsest kind of work in the house or with the mason. He is rather pleasant, easily managed, with all the characteristics of children of his age, likely to be quarrelsome and stubborn, although generally willing, cannot be relied upon, and he persists in taking things that do not belong to him. His Wassermann reaction is positive.

The family chart is exceedingly interesting. It shows at a glance the strong hereditary taint and also the very low grade of morality which characterizes the family in later generations.

It is interesting to note that the paternal grandfather, whom we have called Nick on the chart, is of good family, although he himself was totally different from the rest. He was weak in every way, and by all our criteria to be considered feeble-minded. He married into a family that was much lower socially than his own, although we have no proof that it was a defective family. The children of this couple were all mentally defective and low grade, morally as well as intellectually. This is of interest because of the possibility that we have here an instance of the beginning of a feeble-minded strain. If Nick himself was feeble-minded, as we now think, then it would seem to be a sporadic case, as his ancestors were normal and moral.

The children of Nick all married into bad families and so brought in more defect. Warren's father Jake, a thoroughly disgraceful character, married Sal, a woman somewhat older than he, who was very religious at times; and it is interesting that this religiosity has appeared in several members of this family. Unfortunately for any scientific determinations in this case, the doubtful ones are in such remote generations that we are unable to follow them with any degree of accuracy.

The immorality of this family beggars description. The girl named Moll on the chart, was fifteen years old when Jake brought her into his home; his wife, Sal, was so feeble-minded that she allowed the illicit relations between these two. Moll's child was born in the Hospital after the mother had been sent away from one Home because of her horrible syphilitic condition — from which she finally died.

Our boy Warren's sister Liz, with whom the father lived in incestuous relations, was also allowed to live illicitly with a man who worked for her father. She was so simple that she talked openly about her relations with her father and with this man. When a child was to be born the man married her. At times this man gets religious and will get down on the street and pray and at other times he is correspondingly profane.

This is not all, but it is enough; and sufficient to show what feeble-mindedness leads to when it takes the direction of sexual abuses. We have marked a number of individuals here questionable because we did not have any objective evidence to prove that they were either normal or defective, but one can reason in many cases that, in all probability, they were mentally defective. For example, Jake's brother who married the feeble-minded woman, had a daughter that is marked questionable. Both parents being feeble-minded, that daughter also was undoubtedly feeble-minded. Also Jake's sister married a man whom we have called Mose; one of their children was certainly feeble-minded and the probabilities are great that the others are likewise and that Mose himself was defective. Again to go back to old Nick, since he had six children all defective, it is highly probable that his wife Nan was also defective, and perhaps her whole family likewise.

The chart also illustrates how a good family may be closely related to one of the blackest kind. Sal's father was feeble-minded but he had a brother who was normal. That man married a normal woman and started a normal line which is

thoroly respectable and a well-known family in their community.

CHART 101

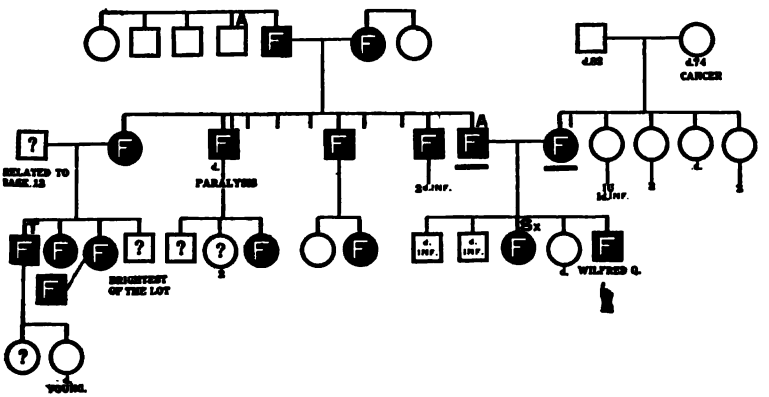


**CASE 101. WILFRED Q.** 26 years old. Mentality 6. Has been here 19 years. American born; father American, mother unknown. Had whooping-cough at eight years, eczema at ten. Assigned cause, "weakness and nervous condition of mother's mind."

Wilfred came here when he was five; could feed himself with a spoon, and get around quickly; could not dress himself; knew letters and colors; did not talk connectedly. After seven years of careful training, at the age of twelve, he could form letters or figures from copy and count to thirty. A year later, however, the record says "draws and copies well, counts to twenty; only able to understand him to ten; is useful in gardening and as a cottage helper." Since that time he has settled down to become a somewhat useful errand boy. He has Pott's disease and is not very strong. He is fairly cheerful, active and obedient, rather willing; inclined to tear things.

A glance at the family chart shows that Wilfred inherited his trouble from both sides of the family. The father's family especially has been worked out rather fully and we find nothing but mental defect all the way through. Besides the mental condition there is much physical degeneracy as well.

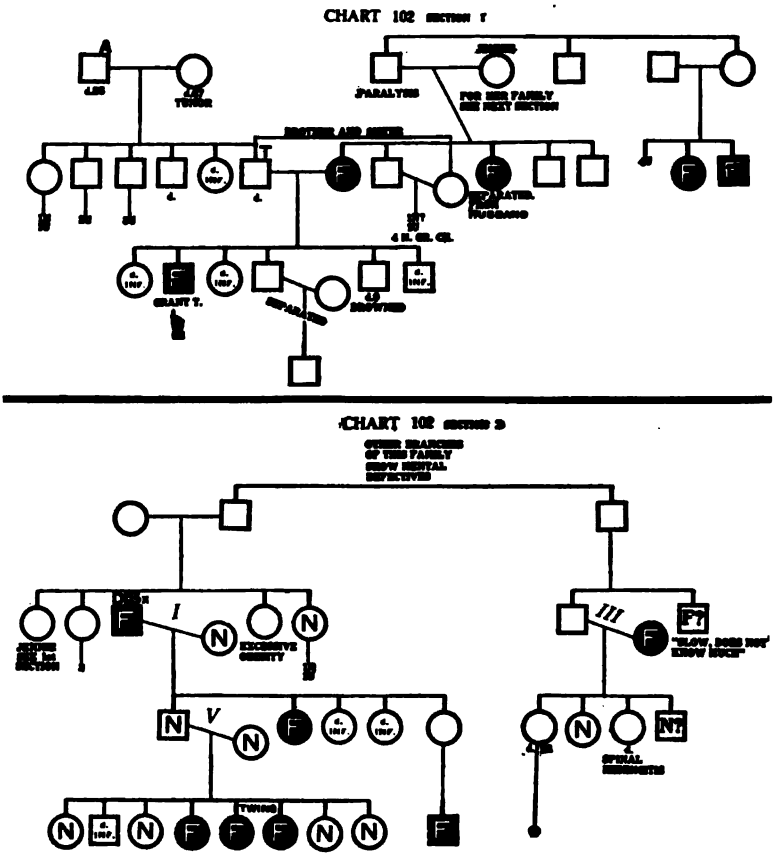


CASE 102. GRANT T. 37 years old. Mentality 6. Has been here 19 years. American born, of American parents. Had whooping-cough.

At the age of twenty-two years Grant could print, A, P, and B. He knew "A" when he saw it; has partial hemiplegia on the right side so that he does not walk well, but he is a rather agreeable, pleasant fellow, talks freely and is trained to do simple work; sweeps, scrubs, washes dishes; does good work in the laundry.

Grant is the second child in a family of six. Three died in

infancy; one was drowned at the age of nine; one is married. There seems to be nothing wrong with the father's family. The mother was feeble-minded and had a feeble-minded sister; also three brothers, condition unknown. The defect breaks out again in the descendants of the maternal grandfather's sister. She had two feeble-minded children; four others are undetermined. In still another branch, the maternal grandmother had a feeble-minded brother who was also sexually immoral, spoken of as a "good-for-naught." He had five children, one of whom was normal, two died in infancy, one was feeble-minded, another one, undetermined, married twice, her first husband giving her a feeble-minded child. The normal son of the old man had eight children, one of whom died in infancy, four were normal and three were feeble-minded.

**CASE 103. HARMON T.** 22 years old. Mentality 6. Has been here 7 years.

Harmon is part colored and part Indian. Colored children are no longer taken at the Training School but in the early days a few were accepted and he was one. He did not talk plainly: dragged himself along but became a fair worker in the laundry and with the donkey team; was cheerful, truthful, good-tempered and obedient. Harmon came to the Training School from one of the County Almshouses of New Jersey. His mother was an Indian belonging to the Ashpeelot tribe. She was married to a colored man and was known as "Indian Lib." She was trifling in character, drank, stole, was immoral, had spells of being peculiar and was generally disreputable, although she had some good qualities. She washed for Dr. Blank and gave her daughter, a feeble-minded girl, to Mrs. Blank to raise. The daughter lived there several years,

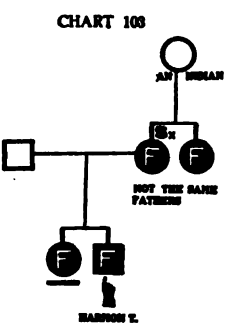

off and on, and was deeply attached to them — called Mrs. Blank "mommy Blank" and once ran away from her grandmother's home and finally reached the Blank residence. The family was startled by a furious pounding on the front door and found her in a frightful condition, her clothes torn nearly off and she seemed quite wild. She stayed with them for some time after that, but her father took her away again. He was not kind to her altho he wanted to keep her at home. She is markedly defective but is a very fair worker. "Indian Lib" had a sister, or half sister, who was also defective. They were the children of a woman who was said to be a full blooded Indian.

**CASE 104. HARRY T.** 20 years old. Mentality 6. Has been here 10 years. American born, of American parentage. Condition attributed to a fall at the age of 14 months. He had chicken-pox at the age of three years, mumps at five, whooping-cough at seven, measles at ten.

Upon admission at the age of ten, he talked indistinctly, could not dress nor undress himself, was cheerful, active, affectionate, truthful, excitable, quick-tempered. He has never been able to do any school work except the most elementary kindergarten, nor has he been trained to very much industrial work. He works

CHART 104 SECTION 1

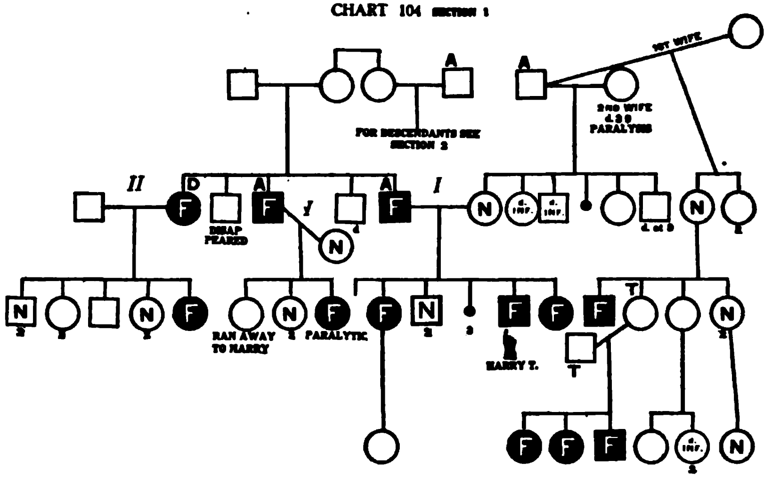

a little in the clothes room and does simple errands; is cheerful, restless, affectionate, slow, excitable; still talks very indistinctly.

He cannot copy the square, much less the diamond, but can count thirteen pennies, repeat the days of the week and even the months of the year; does not know his right hand nor his left ear; definitions are by use; he can execute three commissions.

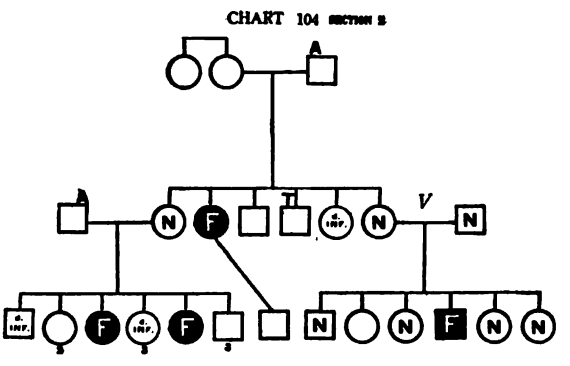


Father was feeble-minded and alcoholic, mother normal. The father has a brother who is feeble-minded and alcoholic and a sister who is feeble-minded and deaf. The latter has had nine children of whom one at least is feeble-minded, while four are normal, the rest undetermined. The alcoholic brother married a normal woman and they have had four children, one feeble-minded, two normal, and one ran away to be married, at nineteen. The parents of the family are unknown, but the grandmother had a sister who married an alcoholic man and they had six children (see chart, Section 2). One of these was feeble-minded. Another daughter, normal, married an alcoholic man and they had eleven children of whom two were feeble-minded. Still another normal daughter married a normal man but had one feeble-minded child out of six — four were normal and one undetermined.

Returning to Section 1 of the chart we see Harry's mother was normal. Her father was alcoholic and twice married. By his first wife he had three children, one of whom, altho normal herself, had a feeble-minded son. Of her four daughters, one, tuberculous, married a man who was tuberculous but whose

mental condition was unknown. They had three feeble-minded children.

Our Harry has two feeble-minded sisters. There have been three miscarriages in the family and there are two brothers normal and one child undetermined. Most of the defectives in the family are high grade, belonging to the moron type.

CHART 105

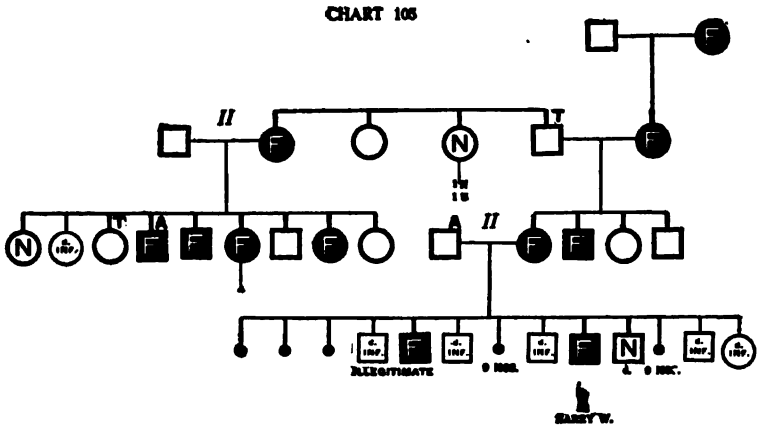

**CASE 105. HARRY W.** 17 years old. Mentality 6. Has been here 7 years. American born; nationality of parents unknown. The child had chicken-pox at the age of five, scarlet fever at six and measles at seven.

Harry is a smiling, pleasant little fellow, of a type that makes one believe that he wants to do a great deal and will some day accomplish it. He is making no progress mentally; has done a little kindergarten work but is not able to get beyond it. Altho his mentality would seem to warrant some little industrial work he has not as yet developed any capacity even for this. He cries easily, talks and cries about nothing, is helpful and troublesome by spells; seems to be deteriorating rather than advancing.

The chart shows an appalling condition of things; of the father nothing is known except that he is alcoholic; the mother is feeble-minded. Of ten conceptions, there was only one normal child, and that one is not living. The rest were either mis-

carriages, died in infancy or feeble-minded. The mother, feeble-minded, has a feeble-minded brother; another brother and sister undetermined. Her mother was feeble-minded and her grandmother also, making four generations of feeble-minded people. The maternal grandfather was tuberculous, whether normal is not known. He had a sister who was feeble-minded. She married a man whose condition is unknown, but they have four feeble-minded children out of nine, while only one of the nine is known to have been normal. The mother of our boy was so defective that she could not remember the order of birth of her own children, nor even their names. Many in this family have malformed feet.

CHART 108

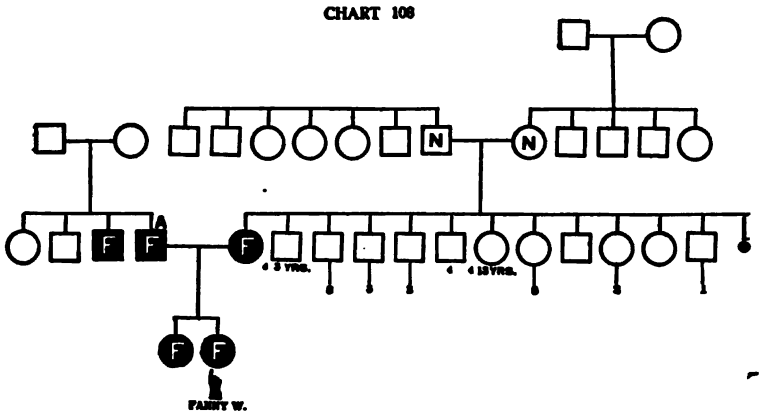


**CASE 106. FANNIE W.** 30 years old. Mentality 6. Has been here 17 years. American born, father French, mother American. Said to have had meningitis and cholera infantum at two, epilepsy at two and a half; has had measles, whooping-cough, scarlet fever and diphtheria.

When admitted at the age of thirteen, it is recorded: "nothing wrong in personal appearance, is self helpful, can do general housework, can count to 100, knows some of the alphabet, cannot learn from books." After admission she learned to read a very little. In the cottage, she worked only when watched con-

stantly, but has improved greatly; is now an excellent helper with the low grade girls. If not watched, she is likely to use the same bucket of water for scrubbing all the dormitories or as far as it will go. Asked to wipe the floor a little drier when she is washing it up, she can find all kinds of excuses for having left it wet. She often talks of home and wishes she could go home, but the last time she went, she cried until her mother had to bring her back. She is often cheerful, cranky and quarrelsome, but generally obedient, restless and affectionate. She has had a broken ear drum and at intervals a discharging ear, but at present is rarely ill. She has no special stigmata of degeneration.

Both her parents are feeble-minded. The father is also alcoholic and has a feeble-minded brother. The rest of his family is unknown. Fannie has a feeble-minded sister. The mother is one of a large family, mental condition unknown. Several of them have married and have children. Their condition is unknown.

**CASE 107. ISAAC X.** 34 years old. Mentality 6. Has been here 24 years. Condition is supposed to be due to a fall at the age of four. He had a spasm from being struck on the head; has had whooping-cough, diphtheria and scarlet fever.

Upon admission at the age of 10, his speech was defective, memory very poor. He could not dress himself, was unclean, dangerous with fire and could not be trusted, was vulgar and profane, of a brutal nature, difficult to manage. Under the Institution discipline, he has steadily improved; is now a strong, healthy, vigorous Institution worker; drives the coal teams. He has his quarrelsome, cranky spells, is somewhat sober, but is rather quiet and obedient, willing and tries; is not truthful or honest; is quick-tempered and forgetful. He is a cousin to Case 30. Comparison of the charts will show the exact relationship.

The father is feeble-minded and has two feeble-minded, and two normal, brothers. One normal brother has married and

has normal children and grandchild. The father of this family was a normal man who was twice married. His first wife was normal, as were all their descendants. The second wife was feeble-minded; she had a feeble-minded brother, another brother undetermined; the latter had a feeble-minded child.

CHART 107

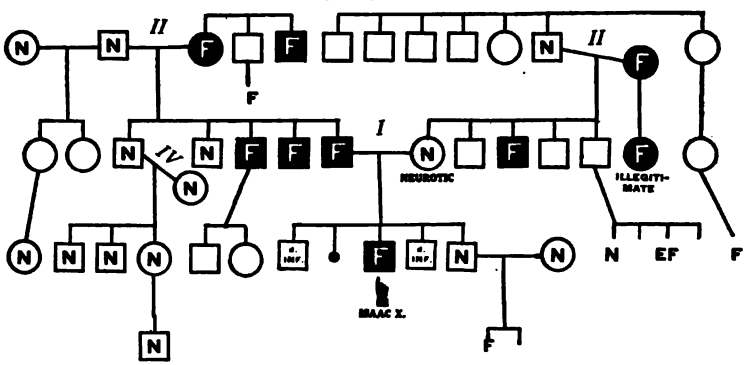


Isaac's mother had four brothers, one of whom was feeble-minded and the rest undetermined. One of them at least had a feeble-minded child. Of the grandparents on this side, the grandfather was normal and the grandmother feeble-minded. This grandmother had an illegitimate child who was feeble-minded and was the mother of the child in Case 30.

**CASE 108. KARL AND PAULINA C.** Karl 21 years old. Mentality 3. Has been here 12 years. Paulina 19 years old. Mentality 5. Has been here 10 years. American born; father Russian, mother American. Paulina had measles at the age of two.

Neither of these children has been able to learn anything of the three R's. The boy is good-natured and obedient, can do spool knitting and can also knit skating caps nicely; does nothing in woodwork; can group pegs in twos; has worked in the various shops and departments; with the mason and in the barn; at present helps in the children's

dining room; cannot scrub floors well, nor wash dishes, but sets the table.

His sister does a little better. She can crochet and do some basket work; does very poorly at woodwork but her sewing is better and she is even learning to use the machine. She does fair housework about the cottage.

One glance at the family chart shows the hereditary character of the defect and that it is of rather low grade. The paternal grandmother left her husband, after they had been married a year, because she discovered that he was defective. Their daughter, the mother of our children, is an imbecile. She was married

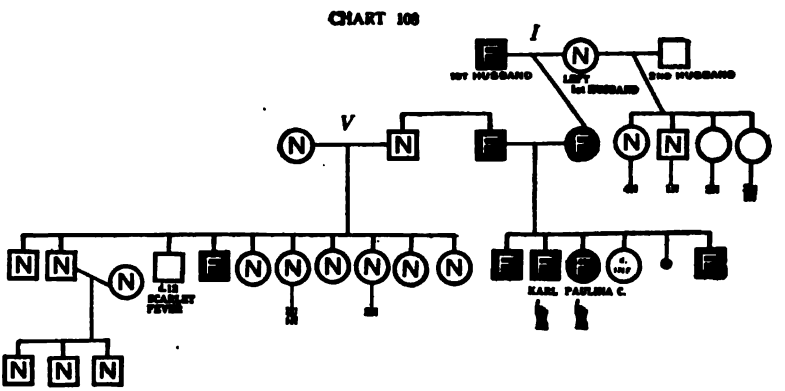


off in the hope of improving her condition; naturally she married a feeble-minded man with the result as shown in their children. It is noticeable that the grandmother alluded to; after leaving the defective husband, married a second man who was apparently normal and they have, so far as can be learned, only normal children and grandchildren.

**CASE 109. MINNIE AND FANNY C.** (sisters). American born, of American parentage. Minnie 14 years old. Mentality 5. Has been here 5 years. Had convulsions at the age of 3, epilepsy at 6, measles at 8. Fanny 9 years old. Mentality 3. Has been here 3 years. Had convulsion at one year; has had acute dropsy.

CASE 105, HARRY W., AGE 17. MENTALLY 6.
CASE 109, FANNY C., AGE 9. MENTALLY 3.
CASE 109, MINNIE C., AGE 14. MENTALLY 5.

These are pretty and attractive children but of low mentality. Minnie has probably reached her limit of development. She does almost nothing in the kindergarten or in any school work; she is learning to do simple housework and is making quite marked improvement there and will perhaps make a useful little Institution helper.

Fanny, the younger sister, will quite possibly make considerable advancement before she finally ceases to develop. She is improving physically and this has a certain reaction upon her mental response to her environment. She did not walk until she

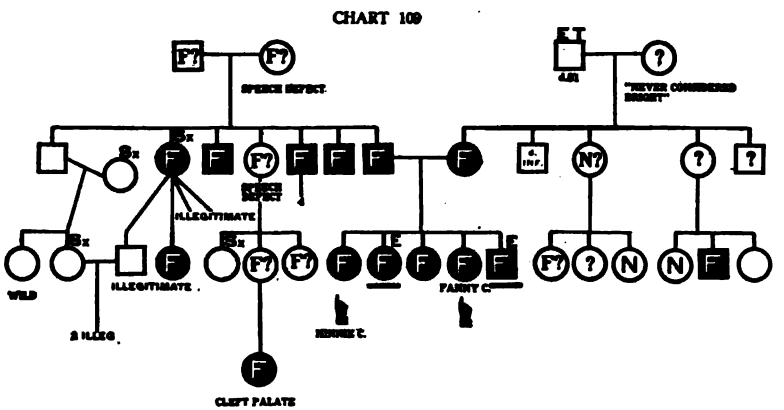


was four years old but now walks and talks. She has congenital recto-vaginal fistula.

This is a defective family thruout. The father and mother are both feeble-minded; a brother and a sister of these children are feeble-minded and epileptic, and are in an epileptic Home. Nearly all the persons, about whom it has been possible to learn, are either feeble-minded or doubtful cases with the presumption in favor of feeble-mindedness. There is much sexual immorality and illegitimacy. There are more or less physical stigmata, of which the one mentioned in the case of Fanny is an example.

CHART 110

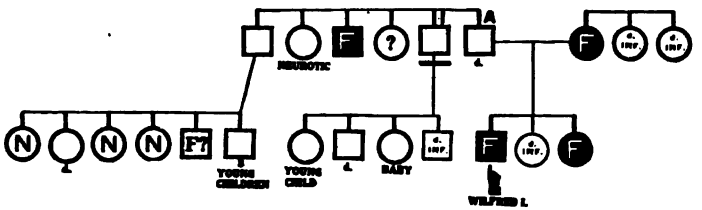


**CASE 110. WILFRED I.** 24 years old. Mentality 5. Has been here 7 years. American born, American parents. He had measles and whooping-cough at the age of fourteen.

This is a middle grade imbecile and consequently not very trainable; he had convulsions at the age of nine months, chorea when three years old and abscesses in his throat at the same time. He does not talk but understands fairly well and tries to make himself understood. For a boy of his grade he is quite helpful about the cottage and outside; will rake leaves and chop wood. Is stoop-shouldered; in height and weight is about equal to 20% of boys of his age. He is sometimes stubborn but usually obedient. Is very slow, somewhat obstinate, probably has no idea of property as he will take things that do not belong to him.

It has been difficult to get much accurate information about his family. Wilfred has a younger sister who is defective and one that died in infancy. The mother was defective. The father was alcoholic and had a cancer. His mental condition is undetermined. The father's older brother was insane, and died at an Insane Asylum. Another brother had a family of eight children three of whom appear to be normal; four others are undetermined; another one seems to be defective as he is ten years old and only in the second grade. Another brother was feeble-minded; two younger sisters are said to be queer and erratic. In general, it is apparent that the family is of a rather low grade mentality and of very poor physical constitution, subject to a great many ills and ailments not found in better stock.

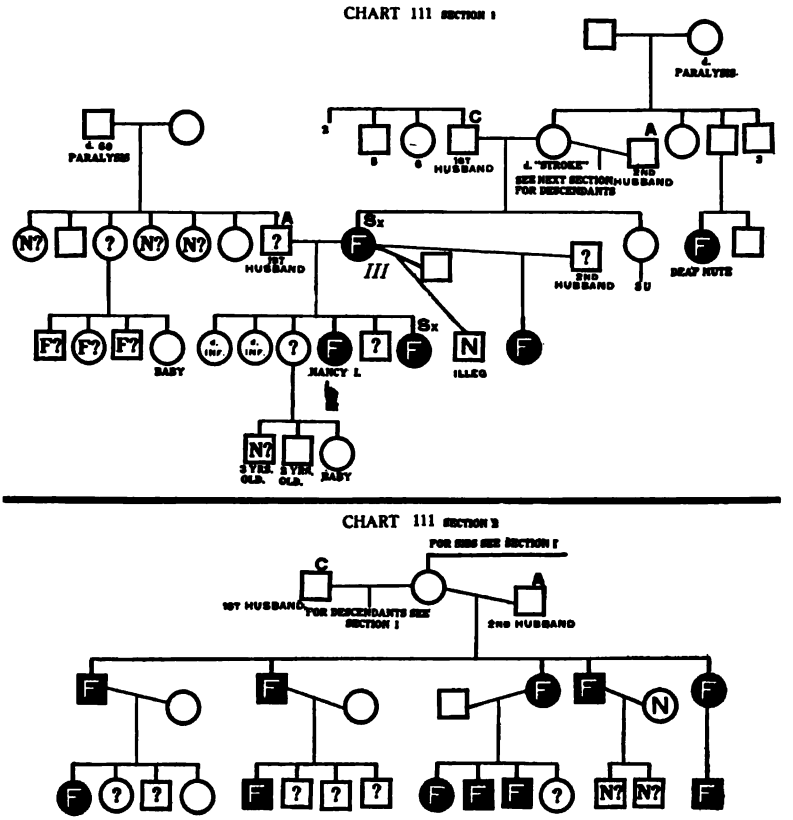


**CASE III. NANCY I.** 22 years old. Mentality 5. Has been here 10 years. American born, of American parents. Had whooping-cough at one year, cerebro-spinal meningitis at two, chicken-pox at four, mumps at eight.

Nancy is a typical imbecile of the middle grade, speaks very poorly, is hard to understand; can do nothing in kindergarten, has made a little attempt at crocheting and basketry and does something in woodwork but with no permanent success; accomplishes nothing whatever with English lessons; is at present working in the cottage and laundry and is fairly helpful.

Nancy belongs to a family of morons; it has been difficult to find a normal person among those that we have studied. The hereditary character of the defect is certainly clear.

CASE 112. URIAH N. 18 years old. Mentality 5. Been here 9 years. American born; father Swiss, mother American. Assigned cause of the condition, "frightened by dull nippers at the time of his first hair cut." The child had measles at the age of four years.

Uriah is a cousin of Frank in Case 145; is a much higher grade of mentality but is not nearly so intelligent in appearance. At the time of admission, at the age of eight, he could not dress himself, had never been to school; was excitable, rude, laughed without cause; could carry in coal and wood. Under training he improved greatly and learned to do simple kindergarten work; could not get beyond that, except a little basketry and knitting and some woodwork. Was finally taken out of the school department on account of nervousness. Is doing good housework and errands; is cheerful, active and obedient, affectionate, somewhat destructive to clothing, somewhat defective in speech.

His heredity chart is given under Case 145.

Uriah is the third born; two older sisters are feeble-minded, two younger brothers undetermined; the latter appear normal — more than that we cannot say. Uriah's father is normal and of normal parentage; the mother is a sister of Frank's mother described on page 261.

CASE 113. JERRY T. 46 years old. Mentality 5. Has been here 21 years. American born, of Irish parents. Has had measles and whooping-cough.

This is a middle grade imbecile who has the appearance of an old man. He is prematurely old. He is a little helpful around the cottage, dressing the boys and doing simple errands around the house. He is sometimes troublesome and quarrelsome, at other times rather pleasant and good natured. One of his

CASE 111, NANCY I., AGE 22. MENTALLY 5.
CASE 113, JERRY T., AGE 46. MENTALLY 5.
CASE 116, NORMAN D., AGE 9. MENTALLY 4.

chief occupations is playing horse. He is very typical for his grade.

He is one of ten children, three were stillborn, at least one other is feeble-minded and the mother was feeble-minded. It

CHART 113

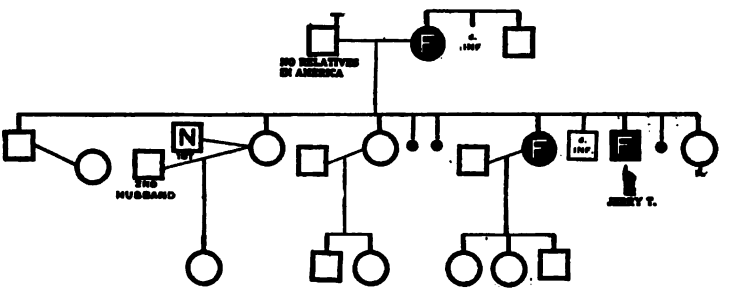

is a low grade family thruout; undoubtedly some of the others would be marked defective if we could get the true information.

CHART 114

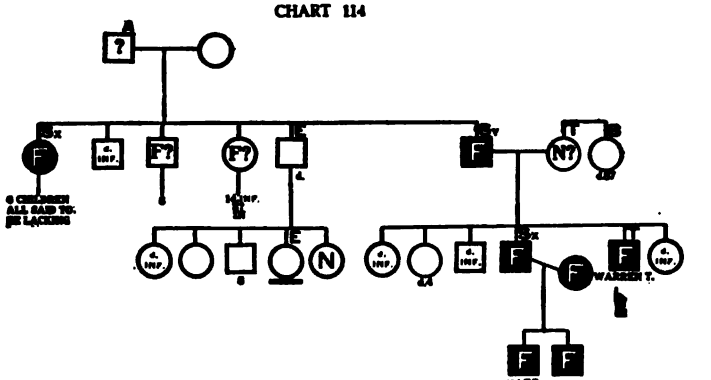

**CASE 114. WARREN T.** 25 years old. Mentality 5. Has been here 17 years. American born; father American, mother Scotch. Had diphtheria at the age of two, whooping-cough at four, measles at five, scarlet fever at eight. Assigned cause of the condition, " congenital with distress of the mother."

Upon admission at the age of eight, Warren's personal appearance was normal but he did nothing for himself; would eat

anything that he could reach. Under training he did a little kindergarten work and could even count to eleven when inclined; learned to print words from copy. He knows colors and can lace his shoes, can tell a little story about what he has seen, has never learned to do anything more than a little scrubbing of floors, picking up trash or the like.

The history indicates a low grade family thruout, altho it has not been possible to get sufficient confirmation to enable us to mark many of them unquestionably feeble-minded; the probability, however, is very high that many are actually defective. There is epilepsy as well as alcoholism and sexual immorality in the family.

CHART 115

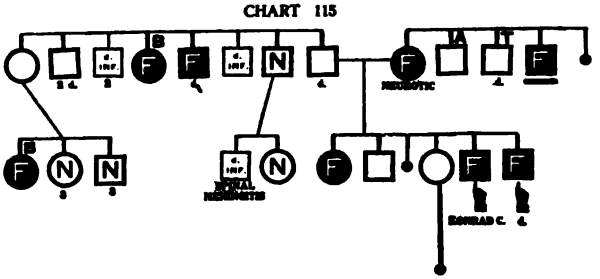

**CASE 115. KONRAD C.** 39 years old. Mentality 4. Has been here 20 years. American born, of American parents. Assigned cause, "congenital — mother has always been neurotic and nervous." He has had spasms, measles, whooping-cough and inflammation of the lungs.

Konrad is a low grade imbecile, his defect showing at the age of two. He talks fairly distinctly and is a fairly useful Institution helper; does laundry work, scrubs, cleans and works in the kitchen; is cheerful and very helpful with little children.

The family chart shows very clearly the hereditary character of the defect on both the father's and the mother's side. Three of this family have been, or are, in Institutions at public expense. Konrad's brother died at the Training School.

**CASE 116. NORMAN D.** 9 years old. Mentality 4. Has been here 3 years. American born, nationality of parents unknown.

This is a pleasant, cheerful little fellow of the low grade imbecile type. He does not talk distinctly or much, but seems to be improving somewhat in his speech. He came here from an Almshouse where, it is said, he had been tied to a post much of the time. He is affectionate, attractive, understands a command, is obedient; has poor memory; fair imitation and attention; is doing simple kindergarten work and is making some progress. His Binet test shows real improvement in two years. He cannot yet make comparisons either with the lines or with the three and twelve grams. He can copy a square and repeat a sentence of ten syllables; cannot count four pennies; does the game of patience; his time sense is not developed, he does not know whether it is morning or afternoon; his definitions are poor; can do the three simple commissions; does not know his right hand nor his left ear; cannot choose the prettier of the faces.

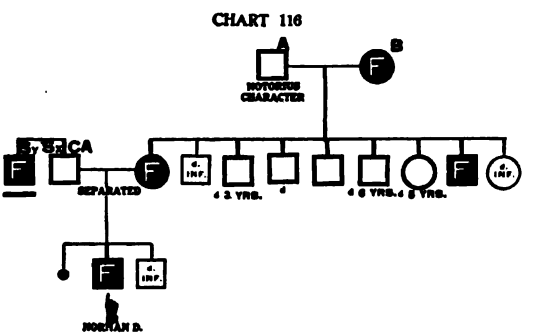


His family chart, so far as we have been able to get knowledge of the family, is thoroly bad, there not being a known normal person on it, while the feeble-minded are scattered thru three generations.

Here again are two instances of a feeble-minded mother and an alcoholic father having defective children and those that died young; no normals in either group. Norman's father was alcoholic, sexually immoral, criminalistic and very probably feeble-minded. He has a brother who is feeble-minded but is in a

hospital for the insane. Thus two of this family are public charges.

Norman is the only living child. The first was a miscarriage and the last died at two and a half years. The mother had a feeble-minded brother. Their mother was feeble-minded, their father was alcoholic and spoken of as a notorious character.

Norman gives a positive Wassermann reaction.

**CASE 117. KESTER I.** 28 years old. Mentality 4. Has been here 7 years. Born in Russia, of Russian parents. Has had measles and whooping-cough; condition said to be congenital.

Kester is a cheerful imbecile of low grade, has a humpback but is a good worker so far as his strength and mentality permit. He is obedient and truthful; can scrub floors nicely.

CHART 117

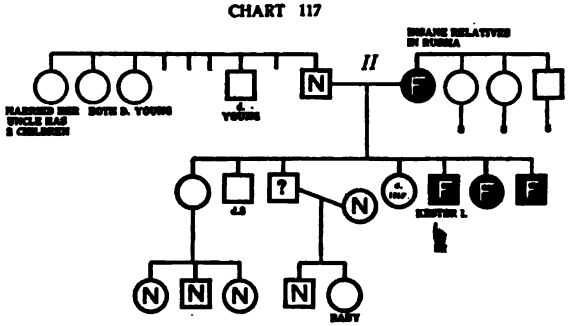


The family chart shows clearly the hereditary character of the condition. Besides mental defect there is some insanity on the mother's side. We have not been able to get a complete record because of the foreign origin of this family.

Kester was detained at Castle Garden on entering the United States. Later, when Castle Garden burned, he was allowed to pass thru because they had no place to detain him.

**CASE 118. FANNY I., MOLLIE I.** (Sisters.) Fannie 13 years old. Mentality 4. Has been here 5 years. Mollie 10 years old. Mentality 1. Came at the same time. American born; mother English, father probably American.

These are two interesting children of the type that makes parents, teachers and others unfamiliar with defectives hold on to the hope as long as possible that they will "come out all right." However, there is no longer any hope for either of these children. The older one tests only four, and the younger only one. They have made no appreciable improvement in mentality in five years. The older one has learned to do a few things. Other things she seems to have forgotten. She has, for instance, learned to iron

CHART 118

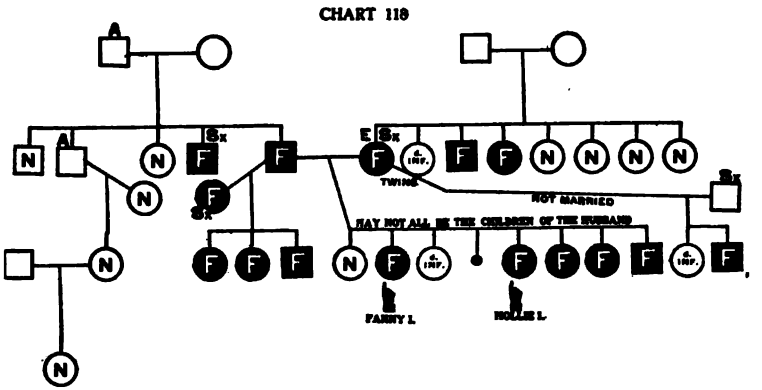


an apron, but has forgotten how to help make a bed. Upon admission the older one could say a few words only, the younger one neither talked nor walked. They have improved a little in this particular. The older one can now talk a little; the younger one knows a few words and can walk. They have probably reached their limit of mentality and nearly their limit of trainability.

These are two of six living children; the mother is feeble-minded, epileptic and sexually immoral. They are supposed to be the children of the same father, who is feeble-minded; but of this there is more than a doubt on account of the character of the mother. Indeed there is strong suspicion that these two sisters are only half sisters. The reputed father of Mollie is the father of three other defectives, by another feeble-minded woman.

On the whole, it is a very low grade family socially, promiscuous in their sexual relations and more or less alcoholic, thoroly irresponsible. Certainly all of those in the immediate family should be cared for and not allowed to live a life of freedom and immorality.

CHART 119

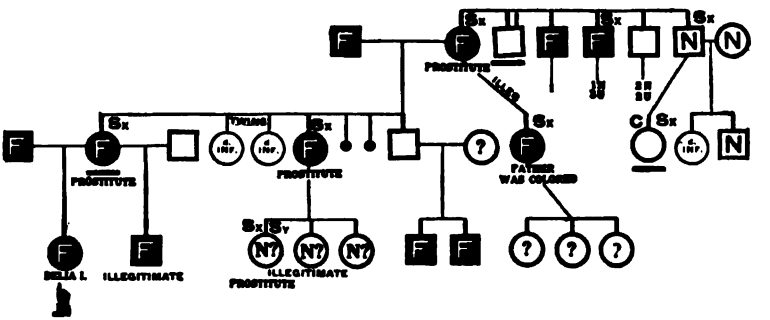


CASE 119. DELIA I. 25 years old. Mentality 4. Has been here 18 years. American born; father of unknown nationality, mother American. Had measles and chicken-pox at the age of four.

Delia is a low grade girl and has the usual history of a child of her grade. Upon admission at the age of six there was nothing remarkably peculiar about her; her speech was defective, memory fair. She could not dress nor undress herself; did not know the alphabet; was fond of music. She was placed in the kindergarten and did the simple exercises well; gradually however, she fell behind the class and at first it was said "oftentimes pretended she did not know when she probably did." Not until she was twelve was it reported that she could dress and undress herself; was very nervous, would sing with others but not alone; could count to eight at that time.

Since then there has been very little change. She gradually gave up the book work and was put to industrial work where she has learned to make beds nicely and to help in the general housework. Her chief characteristic is talking, of which she does a great deal, mostly very simple and foolish. She is said to have

CASE 118, MOLLIE I., AGE 10. MENTALLY 1.
CASE 119, DELIA I., AGE 25. MENTALLY 4.
CASE 120, CHARLIE M., AGE 26. MENTALLY 4.

gotten very silly, on one occasion, over a young lady visitor who admired her curls. She is cheerful, affectionate and good-tempered; is truthful and obedient. She is small of stature, being as tall and heavy as about ten per cent of normal children of her age. Sometimes it takes her a minute and a half to do the form board, making many absurd mistakes with some of the blocks while other blocks are put in their proper places promptly.

Her family chart shows unmistakably the hereditary character of her defect and also the very low grade character of the various individuals.

Delia's mother is in an Institution for the feeble-minded and the mother's sister is the keeper of a disreputable house in a New Jersey town; she passes for a normal woman; she has an illegitimate daughter who was married at eighteen to a man who had no occupation. This daughter has had two miscarriages and was operated on for a "loathsome disease." She is now divorced but the man still calls upon her. Her mother tells, with much pride, that the daughter has two chances as soon as the divorce papers are signed, and she is now engaged to one of the two men. She is an energetic woman and her home is clean and neat. An uncle of the mother died in the Trenton Insane Hospital; a cousin of the mother, a woman, is sexually immoral and criminalistic, and is in an Institution at state expense.

The following taken from a Newark daily paper relates to another cousin of Delia's mother; whether such a girl can be called feeble-minded may reasonably be questioned, but something is surely wrong with her development and she belongs to a family where there is much defectiveness.

"Miss —— and Miss —— of this city, who have been missing from their homes for the past three weeks, were found on Wednesday night in a cheap dance hall, on W—— Street, Newark.

"On being arraigned, they admitted that they had given wrong names. They then gave their correct names, but said that their parents knew they were in Newark.

"This was untrue, as the parents of both girls have been searching for them since they ran away from home three weeks ago. Their disappearance was reported to the local police.

"Both girls are well educated. Miss —— is a graduate of W —— Business College, and is an expert driver of automobiles."

**CASE 120. CHARLIE M.** 26 years old. Mentality 4. Has been here 14 years. Born in England; father German, mother Polish. Had whooping-cough at the age of 4 and scarlet fever and measles at 8; has brachydactylism, web feet and hands.

This is a dwarf of low mentality; could not talk until he was seven; never has been able to do much school work, is not clean, eats with his fingers, cannot dress himself.

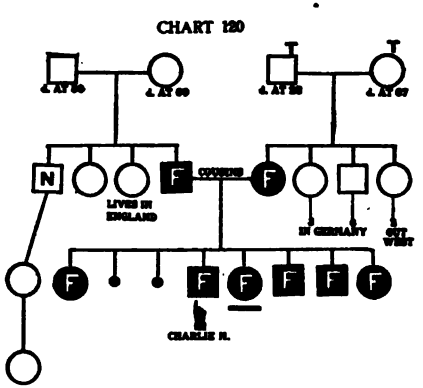


In the school department, he learned to put pegs in the board, learned some colors and could count to 10. He is now somewhat helpful in the cottage in dressing the other boys and helping with the beds. One leg has been amputated, but, with the aid of a crutch, he gets around surprisingly well on the one that is left. He is cheerful, though cranky, quarrelsome and stubborn; sometimes destructive of clothing and mischievous. His memory is poor.

This case is a striking example showing how our immigration laws have failed to protect us. Here are two feeble-minded parents who should never have been allowed to land in this country. They, with their children, have given us five, probably six, defective persons to take care of. It is true this was some years ago and our facilities for detecting such cases were not as good as now. This boy in particular would to-day be held up

because of his physical stature, but the parents would probably get by, as they did when they came. Such cases will continue to enter our country until Congress provides the means for expert examiners and testers for these high grade mental defectives.

This is also an illustration of the way in which consanguinity produces defectives. The parents were first cousins, but they were also feeble-minded. Feeble-mindedness of the children has therefore no necessary connection with the relationship of the parents.

CHART 121

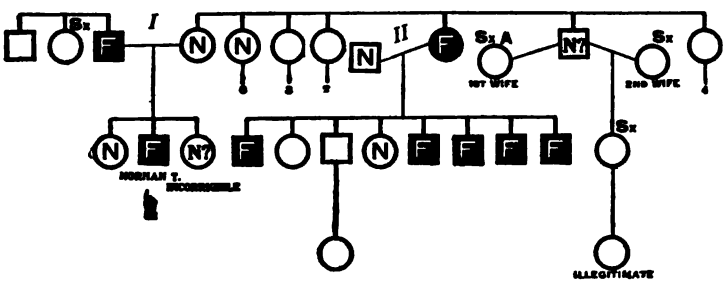

**CASE 121. NORMAN T.** 21 years old. Mentality 4. Has been here 7 years. American born, of American parents. Had measles at the age of seven, whooping-cough at eight. Assigned cause of the condition, "too strong medicine given for peculiar crying spells."

This is an ordinary type of imbecility. Norman had been in public school before coming here; never achieved anything with the three R's; speech imperfect, had no knowledge of color or form. Can do only the simplest or roughest work; can use a saw and plane; can knit a little but very poorly.

The family history is unequivocal on the question of the heredity of the feeble-mindedness. The father was defective and probably syphilitic, according to the testimony of the physician; the mother was "bad" and evidently belonged to a defective family, since her sister, altho she married a normal man, bore five feeble-minded sons. One of Norman's sisters was incorrigible in school.

**CASE 122. KARL V.** 17 years old. Mentality 4. Has been here 6 years. American born, of American parents. Had convulsions at five months, measles at three years, diphtheria at eight years, whooping-cough at nine.

Karl is a low grade imbecile, talks indistinctly but much; understands a command, has learned to count to ten with help; can write neatly from copy; did a little woodwork at one time; always cheerful and helpful. He is a good boy but requires watching; is contented and happy but inclined to be sly; does no work of any consequence; can scrub or rub things a little if constantly watched and kept at it; does not care much for his parents; has bad habits.

CHART 122

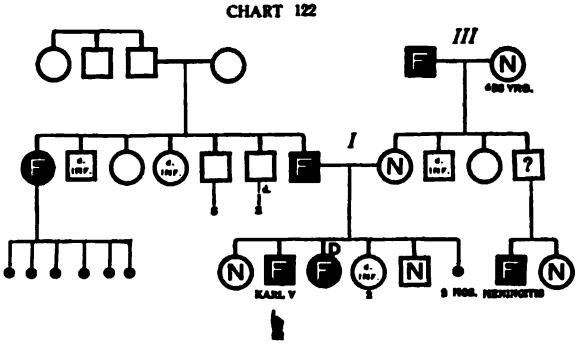


The hereditary factor is clearly evident in the family chart. An older sister was considered normal but ran away from home to be married. A younger sister is defective; a younger brother is reported normal.

**CASE 123. FANNIE C.** 14 years old. Mentality 3. Has been here 6 years. American born, of German parentage. The child had convulsions at three weeks. Her defect showed at one year. Assigned cause, consanguinity of the parents.

She is a very low grade child with probably physical difficulties added to the mental; can dress and undress herself with help; understands simple commands; is quite cheerful and affectionate, but restless; very destructive and nervous. In kindergarten can do nothing more than string a few beads. Does not seem

to be making any progress and it is not likely that she will improve.

The father is feeble-minded and had two normal brothers and a normal sister. Their father was normal and the mother tuberculous. The mother had a feeble-minded half brother and

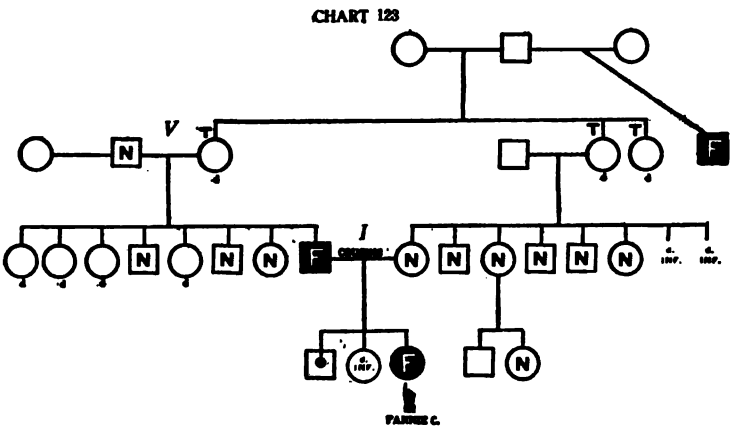


two sisters that were tuberculous. One of these sisters was the grandmother of our Fannie, thus making Fannie's parents cousins.

The mother of Fannie is normal and has five normal brothers and sisters. One of these married and had two children, one of whom is normal and the other undetermined.

**CASE 124. MOLLIE E.** 16 years old. Mentality 3. Has been here 10 years. American born, of American parents. Child had measles at five years; has had rickets.

Mollie is a low grade imbecile, varies very little, is sometimes hard to manage; is cheerful, affectionate, excitable, quick-tempered. She is untrainable except in a few simple matters, tries to help a little but cannot do anything significant.

Mollie belongs to a notorious tribe of defectives and degenerates, a full history of which will be published later.

CHART 124

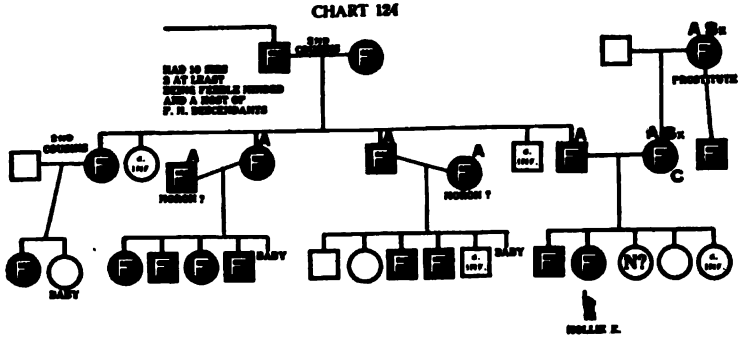

We give here something of the immediate family to show its generally defective character.

CHART 125

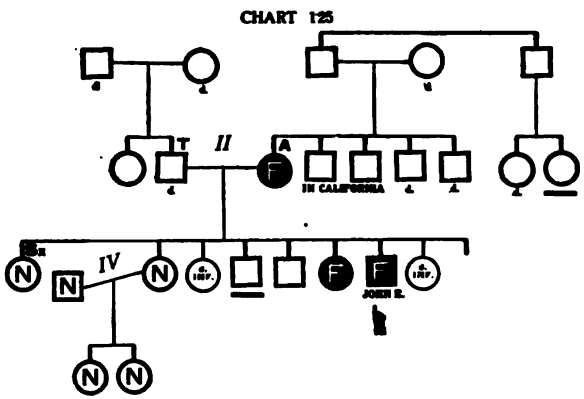

**CASE 125. JOHN E.** 15 years old. Mentality 3. Has been here 4 years. American born, father American, mother Irish. Had whooping-cough at the age of four; has had chicken-pox. The child was born about three weeks prematurely. The mother's theory refers to an episode with a half-witted boy which excited her. John did not open his eyes for two weeks after he was born. The defect showed at three years; he fell out of a carriage at that age and was very quiet for a few days.

Upon admission at the age of eleven, he partially understood a command, could help dress himself; was inclined to throw things about; cried without cause. Since coming here the

child has changed little; has had his tonsils and adenoids removed, but still keeps his mouth open. He talks some but not distinctly; goes to school but does very little there; is silent, sober, cheerful, sensitive, affectionate.

The family chart, while very incomplete, shows clearly the hereditary taint. An older sister is feeble-minded; an older brother has been in a Reformatory and, very likely, is also feeble-minded. Two older sisters are questionably normal; two others died in infancy. The mother is feeble-minded and alcoholic. Her four brothers are undetermined, two of them being in the west. A cousin of the mother's is on Blackwell's Island.

**CASE 126. BENNIE AND ISAAC G.** (Brothers.) American born; father German, mother American. Bennie is 21 years old. Mentality 3. Has been here 9 years. Had measles at the age of nine and whooping-cough at three. Isaac is 17 years old. Mentality 2. Has been here 9 years. Has had whooping-cough and had measles at five.

These brothers who came to the School at the same time are of low grade type and have many stigmata of degeneration. They

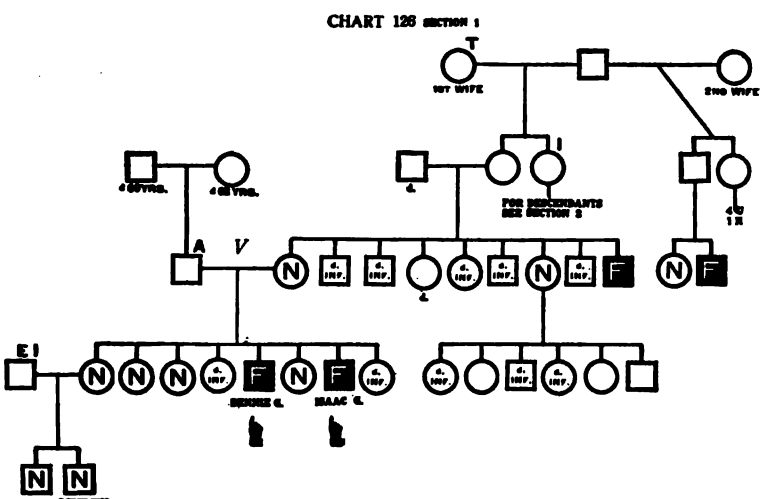

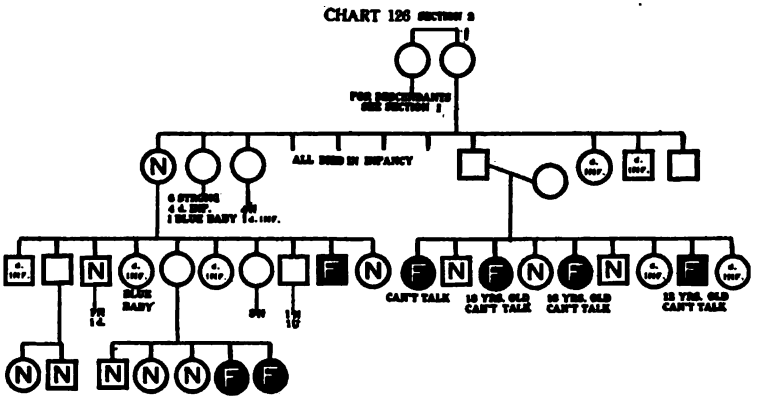


are low grade imbeciles, the older testing about a year higher than the younger, altho the younger is the better looking of the two. Their defect has existed from birth and was recognized as congenital.

A glance at the chart shows that it is more than congenital; it is truly hereditary. Altho the mother was normal and the father's condition is undetermined, it will be seen that there is a great deal of defect in collateral branches of this family, which would indicate the hereditary character of the taint.

**CASE 127. KARL G.** 22 years old. Mentality 3. Has been here 14 years. American born; father American, mother Irish.

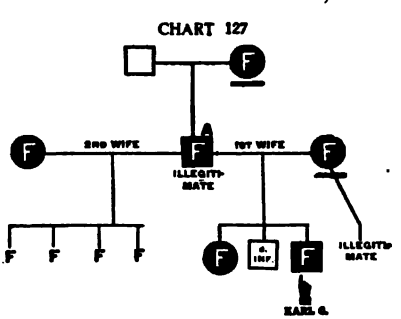


At the time of admission, he was about seven years old; could partially dress himself, was obedient, speech somewhat defective, knew some colors; had the habit of wandering away, was not clean and had bad habits; learned to do a little kindergarten work and to count to nine. For a year or two it was thought he was

CASE 122, KARL V., AGE 17. MENTALLY 4.
CASE 127, KARL G., AGE 22. MENTALLY 3.
CASE 131, GEORGE N., AGE 26. MENTALLY 3.

improving decidedly, but then he stopped. He does a little work about the cottage, but is untrustworthy and untruthful, excitable, thieving, destructive and mischievous.

Altho we have been unable to find many members of his family, those that we have found are practically all defective, extending over three generations. Both parents are feeble-minded, the father is also alcoholic and the paternal grandmother is feeble-minded. The father married a second wife who was feeble-minded and had several children. He is very much of a vagabond. Several of these people have been in almshouses, and others a considerable burden upon private charity — altogether a very miserable lot.

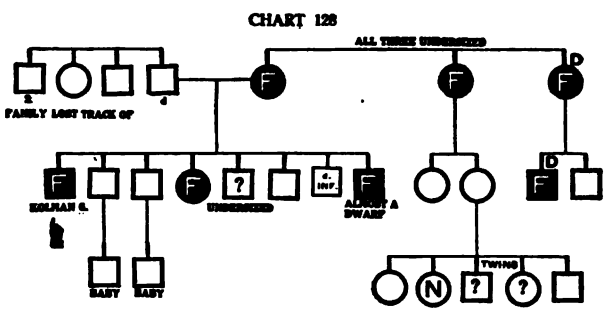


**CASE 128. KOLMAN G.** 31 years old. Mentality nearly 4. Has been here 17 years. American born, of American parents. Supposed cause of condition, "convulsions from teething." Had convulsions at the age of ten months; has also had measles.

Kolman is a wheel-chair case, not being able to walk on account of atrophy of the leg muscles. He talks a great deal and is apt to be very obstinate, stubborn and abusive, sometimes using profane language to a shocking degree. He feeds himself and understands a command but will not obey. On account of his age when admitted and because of his crippled condition he has never been trained to do anything.

The family chart shows the true cause of his condition to be

heredity. His mother's family, at least, was clearly defective and one would guess that probably the father's was also. This particular boy would never have been dangerous socially on account of his physical defect and probably because of his very low mentality. His brothers and sisters, however, are at large. Two brothers have married and so there is undoubtedly a good deal of contamination from the defect in this family. On the mother's side there is also a tendency to dwarfness which seems to be somewhat transmitted, some of Kolman's brothers being decidedly undersized.

CHART 129

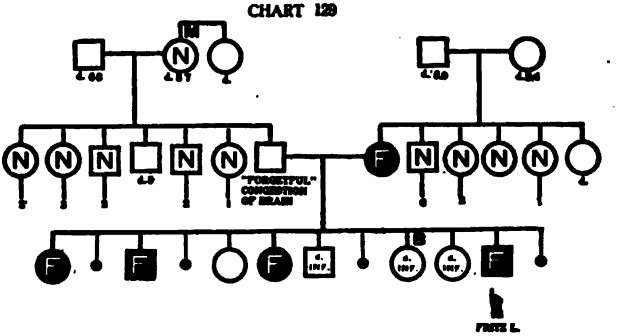

**CASE 129. FRITZ L.** 15 years old. Mentality 3. Has been here 7 years. American born, of German parents. Had spasms at the age of twelve; condition is said to be congenital, supposed to be due to the father's alcoholic habits.

This is clearly a case of hereditary feeble-mindedness as is evident from a glance at the chart. It is apparently complicated or made a little worse, by the neurotic condition on the father's side.

**CASE 130. WARREN M.** 22 years old. Mentality 4 nearly. Has been here 12 years. American born; father German, mother American. Had whooping-cough at the age of two; diphtheria at three and a half; spasms while teething. His defect was noticed at the age of six months. He weighed eighteen pounds at birth. His condition is attributed to a fall the mother had in the seventh month of pregnancy.

This boy is a low grade imbecile, appearing much younger than he is, probably due to his small stature; he is only as tall as ten per cent of the children of his age. Warren is a pleasant faced, good natured boy with few, if any, external evidences of his defect. He talks very little and indistinctly at that. He is rather typical of his grade, not able to do much, some very simple errands and outside work, does not show much interest in anything; has learned to set up ten pins and will roll the ball; can do a little kindergarten work, knows colors; will sometimes

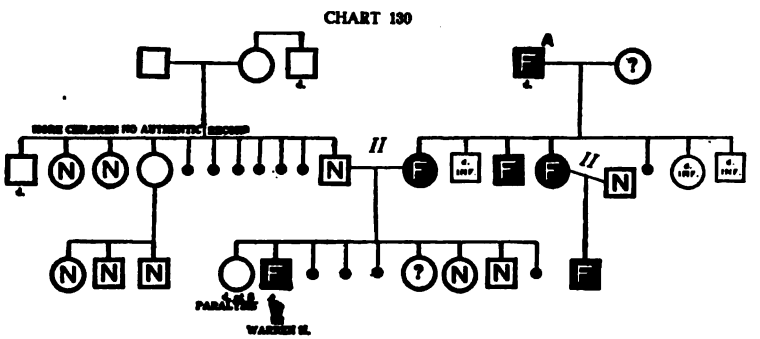


remember things a long time, but generally forgets them immediately. On one occasion he had been given a number of different tests in the laboratory and the following day he appeared, of his own accord and went through in pantomime all that he had been asked to do the day before, remembering even to the manner of movement.

The family chart shows clearly the hereditary nature of the defect and the generally bad condition.

The father is normal and we know of no defect in his family. The half dozen cases of miscarriage that the paternal grandmother had, look suspicious, especially as the mother is reported to have had queer notions; there may be a defect here also.

The mother of Warren was feeble-minded and belonged to a defective family. Her father was feeble-minded and alcoholic,

her mother is questionable. We have in this family an illustration of what is no uncommon occurrence — a sister of Warren's mother was seduced by a normal man and they had a defective child. This is, of course, the common danger in allowing such girls to be at liberty.

CHART 131

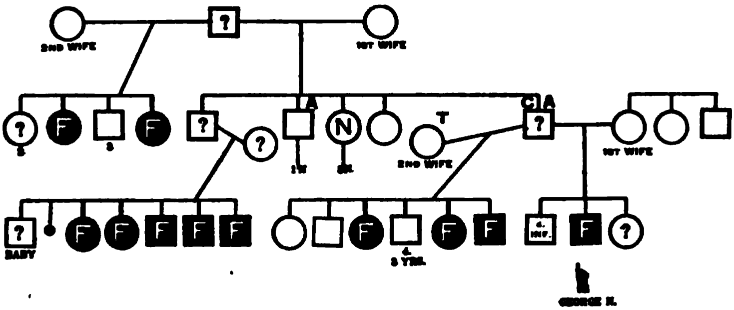

**CASE 131. GEORGE N.** 26 years old. Mentality 3. Has been here 13 years. American born, of Irish parents. Instruments were used at birth, but the physician assures us that this was not the cause of the condition. Epilepsy developed at the age of six days and he has had measles and whooping-cough. He had a fall on the floor at four days and the convulsions developed two days later.

George came here at the age of thirteen; he walked with choreic movements, could not button his clothes, was heedless of danger. He has improved in conduct and health; can do considerable work and is quite helpful about the cottage; does not talk; is very quick-tempered and excitable, inclined to be thieving.

This is a clear case of hereditary feeble-mindedness and the interesting point is that it has clearly been transmitted thru the male line, for while we do not know but that some of the wives may have been feeble-minded also, yet, whatever the mentality of the wives, there were always feeble-minded children. For instance, George's father was twice married and had defective children by both wives; George's uncle had a family of defec-

tives; George's grandfather had, by another wife, at least two defectives, the others being undetermined. Altogether it is a very low grade defective family.

George's Wassermann reaction is positive.

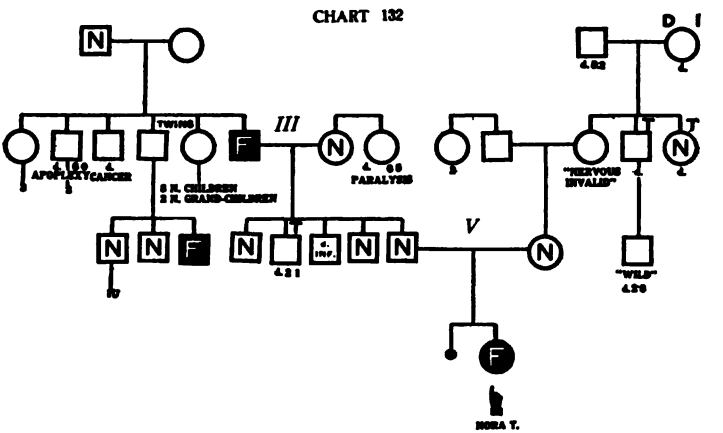


**CASE 132. NORA T.** 13 years old. Mentality 3. Has been here 1½ years. American born, of American parents. Had measles at four years, whooping-cough at seven; had slight eczema and pneumonia. Assigned cause, " congenital and insufficient nourishment."

Nora is not an unattractive child in appearance but is of low grade; can walk, but does not run nor jump; is clumsy and awkward in the use of her hands; cannot dress nor undress herself; counts to ten but cannot apply it. She seems to be happy and has improved since coming to the School, but she does nothing for herself.

The family chart undoubtedly shows the hereditary character of the defect, it being recessive in the father's family. Nora's grandfather, however, was clearly feeble-minded, and he had a brother whose mental condition could not be determined but who had a feeble-minded son. On the mother's side Nora's great grandmother was insane, and we shall have to consider

that, the father and mother both being normal, the feeble-mindedness in the father's family and the insanity in the mother's brought about this result in the case of Nora.

**CASE 133. QUENTIN A.** 14 years old. Mentality 3. Has been here 7 years. American born; father American, mother a foreigner.

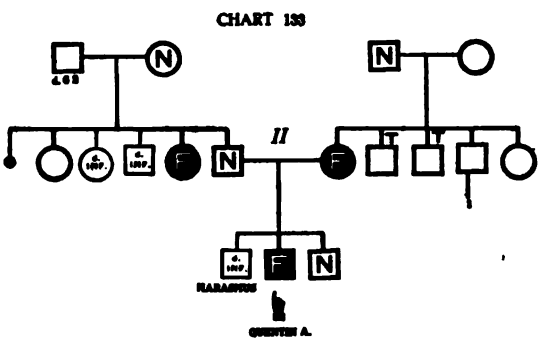


Quentin is a low grade child entirely untrainable; his defect was noticed soon after birth and was thought to be due to a fright the mother had two months before he was born.

A glance at the chart, however, shows the unmistakably hereditary character from both sides of the family.

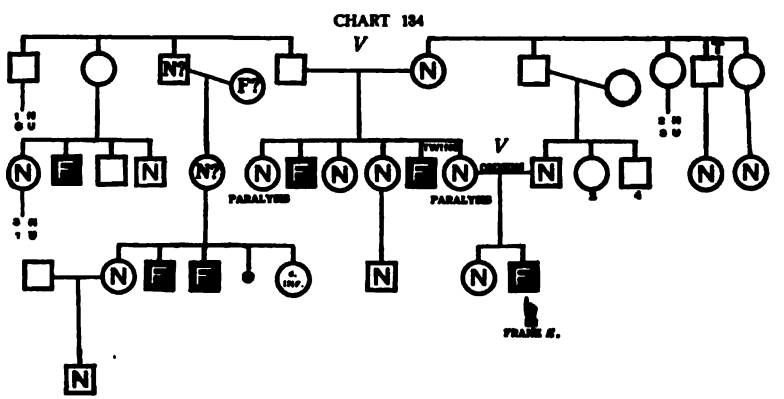


**CASE 134. FRANK A.** 17 years old. Mentality 3. Has been here 1 year. American born; father German, mother American. Had measles at eight years, whooping-cough at ten. Supposed cause, " careless handling by trained nurse the first week of his life."

Frank has no bodily deformity except an awkward walk; goes up and down stairs normally; his articulation is poor; had been in school a great deal but never could accomplish anything; could not even help himself.

A glance at the chart shows at once that the condition is hereditary in the mother's family. We also have here another case of twins with one normal and the other feeble-minded.

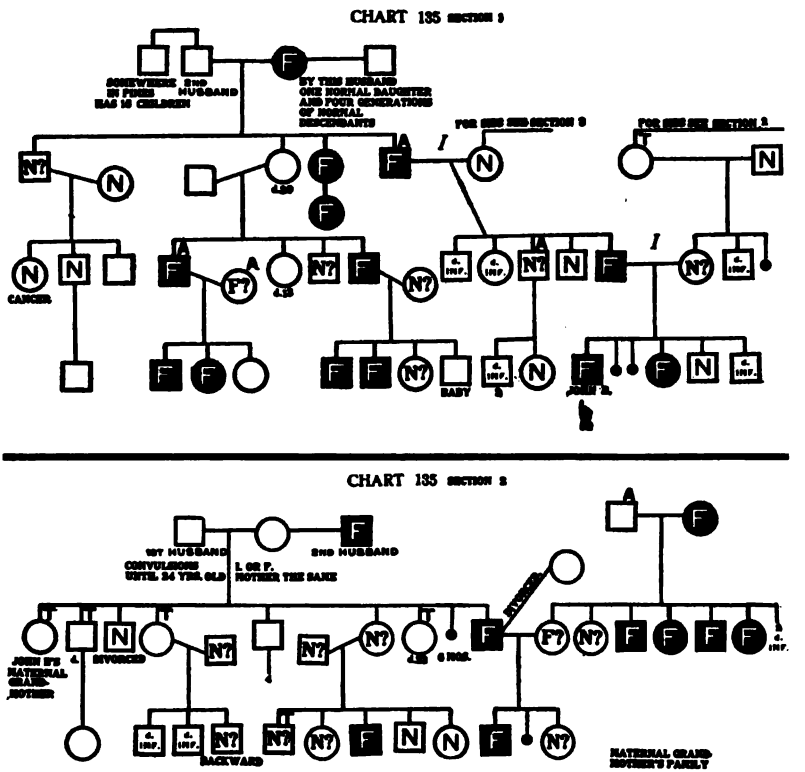


**CASE 135. JOHN B.** 12 years old. Mentality 2. Has been here 4 years. American born, of American parents. Had convulsions when cutting teeth at two years; had whooping-cough at two years. Assigned cause, "long labor and possibily syphilis."

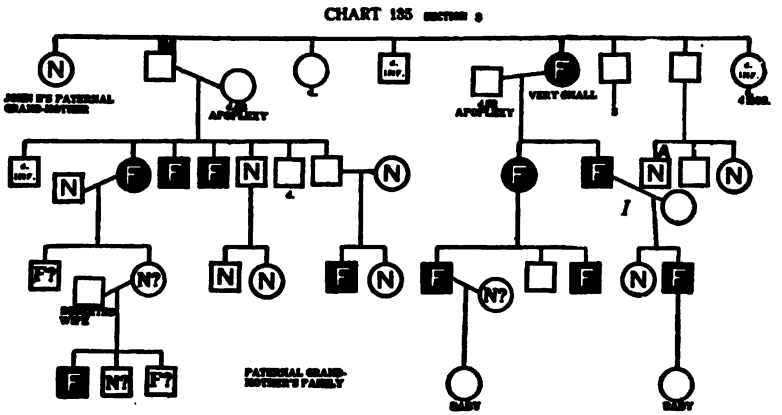

This is a low grade child, cannot take care of himself and has never been to school; has made some very slight improvement since admitted to the Training School; habits are a little better; cannot talk nor obey a command; probably the only improvement so far is a little in his physical condition.

The family history is bad; a number of individuals, near and remote relatives of John, are feeble-minded; many more are marked as questionably normal, which would mean at least that they are of low intelligence if not actually mentally defective.

John gives a positive Wassermann reaction.

**CASE 136. ISADORE D.** 15 years old. Mentality 2. Has been here 7 years. American born, of American parentage. Assigned cause, "maternal impression." The mother was frightened by a woman with a hare lip and a cleft palate. The child had whooping-cough at the age of one year and measles at seven.

This is a low grade case with several stigmata of degeneration. He has a cleft palate, very large ears, prominent teeth and an unpleasant countenance; is highly nervous and excitable; does not talk or do any sort of work. His Wassermann reaction is positive.

This family is one that we have been able to study more thoroly, with the result that there are more bad things in evidence.

Isadore is one of nine children, two of whom, twins, appear to be normal; the rest are either defective or died young. The father was alcoholic and syphilitic but seems to be the only black

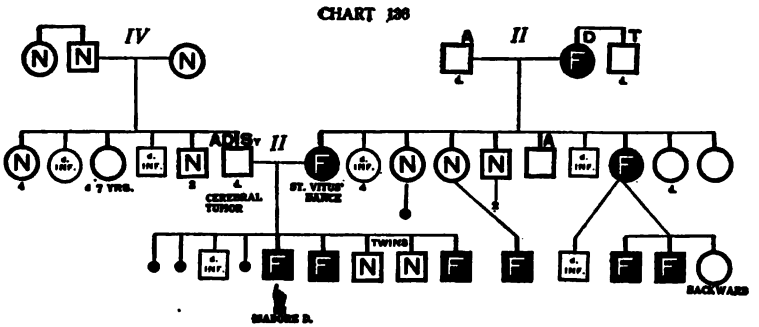


sheep in his family. The mother is defective, has a defective sister, who in turn has two feeble-minded children. The maternal grandmother of Isadore is feeble-minded.

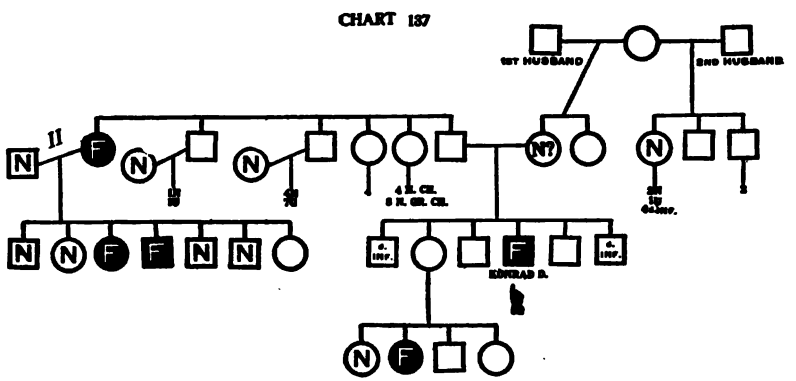


**CASE 137. KONRAD D.** 35 years old. Mentality 2. Has been here 20 years. Born in Sweden, of Russian parents. Has had measles; had spasms at seventeen years. Assigned cause, " a fall from baby carriage at the age of five months."

Konrad is the fourth child in a family of six. These are foreigners and most of the family are in the Old Country. It was

very difficult to talk with those who were seen. However, we ascertained that a sister of this boy has four children, one of whom is normal, one defective, the other two are unknown. A sister of the father of our boy was mentally defective and had two defective children out of seven; four were normal and one undetermined. Konrad is low grade and perfectly hopeless.

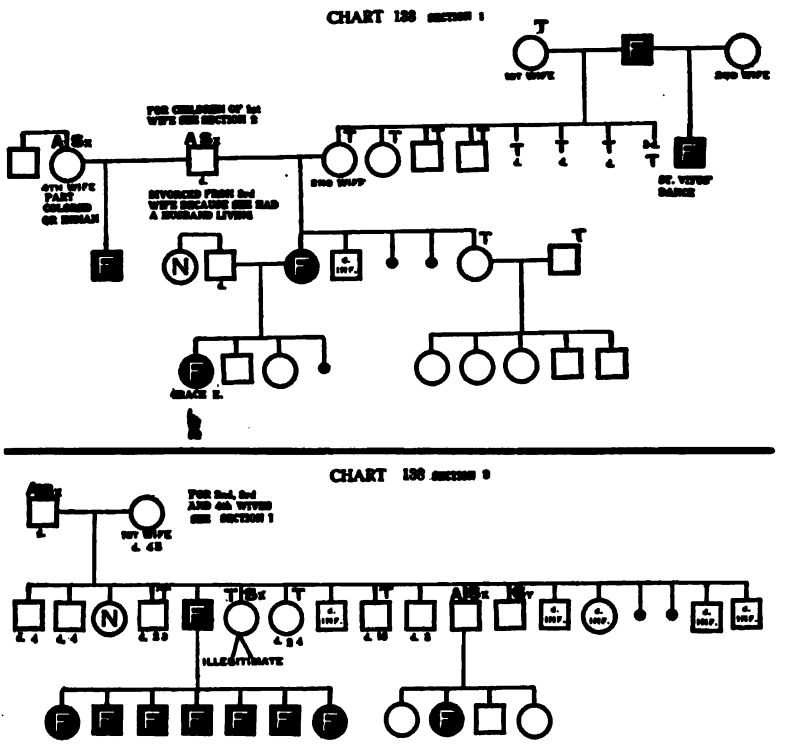

**CASE 138. GRACE E.** 15 years old. Mentality 2. Has been here 10 years. American born, of American parents. Had measles at the age of six months, whooping-cough at four years. Has had cholera infantum. Assigned cause, " sickness, or condition of the mother."

This low grade case is one of the excitable type and has made no improvement.

This is a very large family but unfortunately a great deal is undetermined. However, there is enough to show us appalling conditions, both physically and mentally.

Grace is the oldest of three children. The father died of appendicitis. He had a normal sister. His father (not shown on chart) died of cancer; nothing else is known of him. Of the paternal grandmother's family nothing is known. The trouble clearly comes from the mother's side. Her father was a notorious degenerate, alcoholic and immoral. He was four times married. There is no conclusive proof that he was mentally defective. His descendants by his first wife were tuberculous, many of them immoral. One son had a feeble-minded daughter; and another son, feeble-minded himself, had seven children all feeble-minded. The mother of our child was a daughter of the second wife of this man. This second wife was tuberculous as were her nine brothers and sisters. Their mother was tuberculous, and their father our child's maternal great-grandfather was feeble-minded. He was twice married and had a feeble-minded boy by his second wife. Coming back to our child again, we note that her mother had a tuberculous sister and that sister married a man who was tuberculous. Grace's maternal grandfather had no children by his third wife, but by his fourth wife, who was alcoholic and immoral, he had a feeble-minded boy.

**CASE 139. NESSIE E.** 32 years old. Mentality 2. Has been here 23 years. American born, of American parents. Has had measles, whooping-cough and jaundice.

Nessie seems to have degenerated and there are some signs of insanity which may have destroyed part of what little intelligence she had. Her earlier records are better than at present, altho she was never of high grade. Upon admission at the age of seven it is recorded that her speech was imperfect, she recognized color and form, was fond of music, would try to sweep and wash dishes; could not dress or undress herself. She was

tried in the kindergarten and it was felt that she *could* do but would not. She learned to dress herself but could not fasten her clothes; could select colors.

Fifteen years ago she was a kitchen helper, washed dishes, polished floors, brought vegetables from the cellar, etc. At present she helps a little in the dormitory with the other children. She is sober, silent, quarrelsome, cranky, quick-tempered. On one occasion she showed a memory of what a former attendant had taught

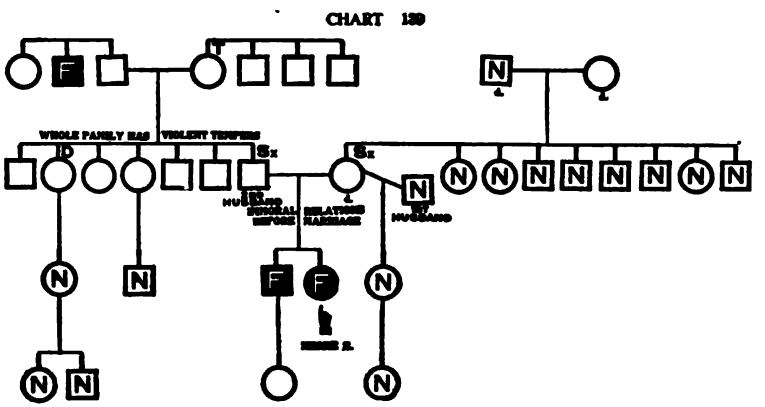


her some years before and upon the visit of that attendant performed the task that she had been taught. Upon another occasion she got a needle and thread and tried to mend an apron that was torn, all of which is better than her test would indicate.

Her mother's condition is undetermined but she seems to have been of good family and by her first husband, who was a normal man, had a normal child who has had in turn a normal daughter. The father of Nessie was sexually immoral; little is known of his family except that an uncle was feeble-minded and the family were noted for their violent tempers.

The fact that there are two feeble-minded children and that the father's uncle is feeble-minded would seem to make the hereditary feature fairly well demonstrated.

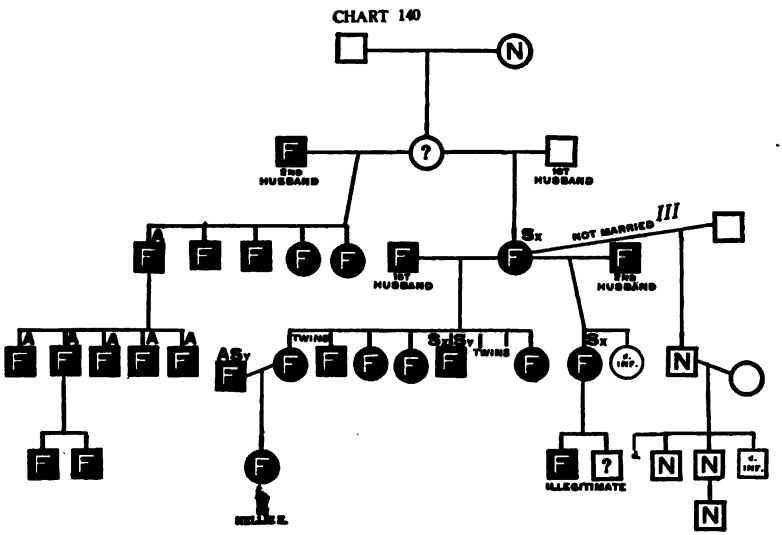


**CASE 140. NELLIE E.** 24 years old. Mentality 2. Has been here 17 years. American born, of American parentage. She is epileptic, convulsions beginning at three months; had whooping-cough at the age of four years.

This is a very low grade child, has almost no intelligence, does not know candy from wood, is very bad tempered and quarrelsome, although sometimes affectionate; cries a great deal. Upon one occasion when it was necessary for her to have some teeth extracted she had a bad brain storm from which she was very slow to recover. She is inclined to fight, pinch and scratch the other children, has to be watched very carefully.

Her family chart shows the hereditary character of the defect. This is a part of the large family of defectives and degenerates referred to in Case 64.

The extra seriousness of Nellie's defect, the grade of idiocy, may be the result of the epilepsy, which is possibly due to a severe fall that she had when very young. There seems to be no evidence that the epilepsy itself is hereditary in her case.

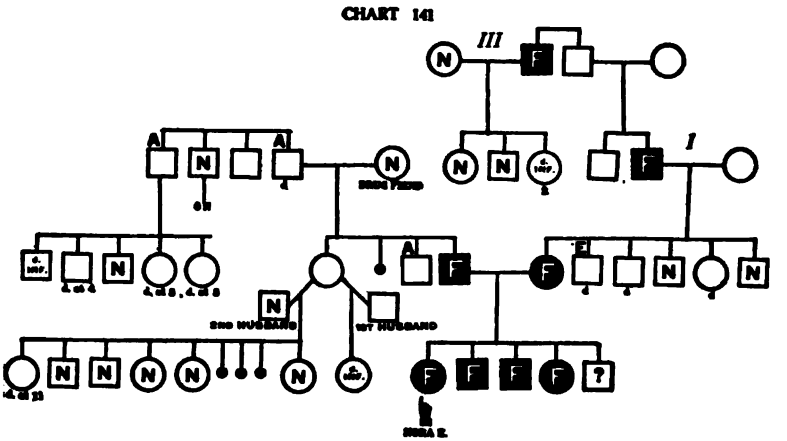


**CASE 141. NORA E.** 13 years old. Mentality 2. Has been here 7 years. American born, of American parents.

This is a very low grade case; is congenitally deaf; eats garbage; does not sleep well; will play with blocks alone for a long time; is cheerful but quick tempered; has bad habits; walks badly; can undress herself, but usually will not; sometimes shows some slight intelligence by taking another girl by the hand and leading her into line to march out to the hall; will get into the bathtub with her clothes on and turn on the water full force, whenever she gets a chance.

Nora has three sibs defective, and one undetermined. The father is feeble-minded, but seems to be the only one of his family that is defective, altho there is some alcoholism in the family. The mother is feeble-minded, as was her father and her father's uncle. Otherwise, we have not been able to discover any defect except that the mother had a brother who was epileptic.

**CASE 142. NANCY F.** 21 years old. Mentality 2. Has been here 15 years. American born; father French, mother German. Has had spasms.

Nancy is of the idiot grade, has a small head; walks badly; does not speak; is excitable and nervous; laughs without cause; is unclean.

CASE 140, NELLIE E., AGE 24. MENTALLY 2.
CASE 141, NORA E., AGE 13. MENTALLY 2.
CASE 142, NANCY F., AGE 21. MENTALLY 2. (lower left)
CASE 150, IZZY P., AGE 12. MENTALLY 2. (lower right)

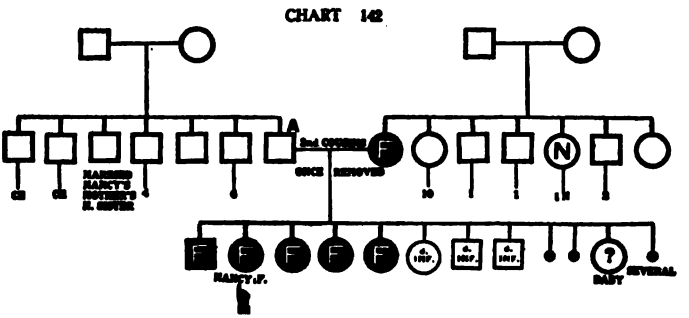

The cause of Nancy's condition is perfectly clear after a glance at the family chart.

She has three sisters and one brother feeble-minded and one sister and two brothers died in infancy. A younger sister is undetermined, being only an infant as yet. The father is distinctly alcoholic but whether feeble-minded or not has not been determined.

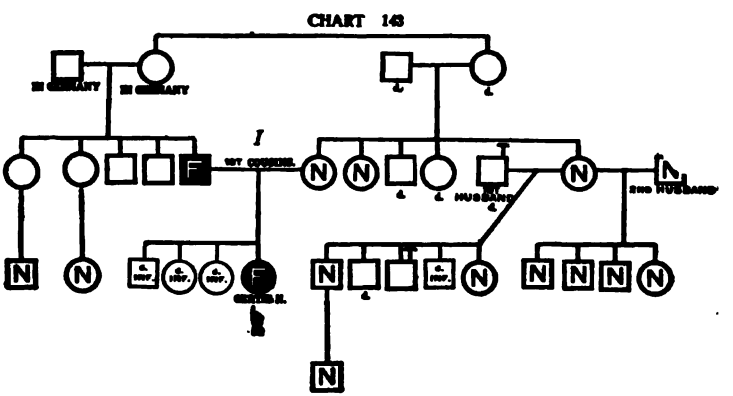

CASE 143. GERTIE H. 16 years old. Mentality 2. Has been here 6 years. American born; father Russian, mother American. Had diphtheria at the age of four years.

Gertie is a helpless idiot, walks, eats and sleeps; does nothing else. The father and mother are cousins; the father is defective but the mother seems to be normal.

**CASE 144. EVA I.** 18 years old. Mentality 2. Has been here 11 years. American born, of German parentage. Had typhoid fever at the age of six years. Supposed cause of the condition, "fright of the mother and congenital tendencies," also "typhoid fever."

Eva belongs to the excitable idiot group, is untrainable except in some of the simplest habits, is very nervous, moves oddly, cannot feed herself, speaks very little and very imperfectly; is very fond of music and tries to hum a tune; is very gluttonous

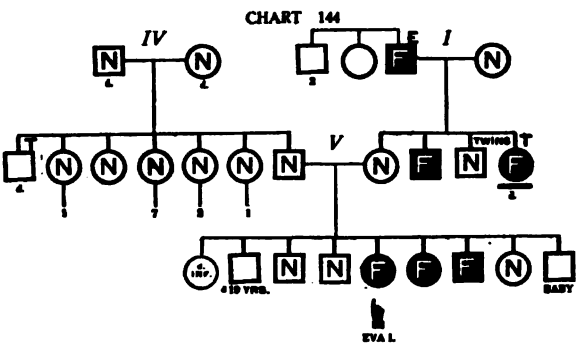


and puts everything into her mouth; destroys clothing; has no sense of danger; in short has the usual characteristics of her type.

As so often happens the family chart shows that the suggested cause of the condition, typhoid fever in this case, is probably not significant, as there is clearly feeble-mindedness in the family. It is quite possible that the fever may have had an influence in making her the low type that she is.

This is an interesting case of a defect skipping a generation, at least a part of it. Eva's mother was normal but the maternal grandfather was feeble-minded and epileptic and Eva's mother had a defective brother and a defective sister. The father was normal and of an apparently thoroly good normal family. It is interesting to note that Eva's mother had a brother and sister who were twins; one was normal and the other defective.

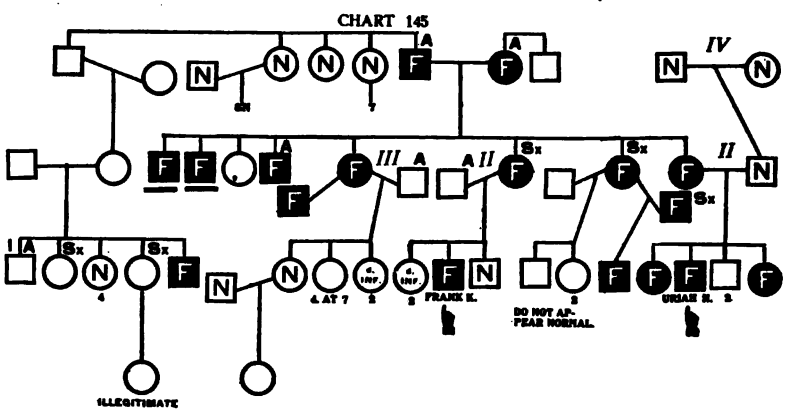


**CASE 145. FRANK K.** 16 years old. Mentality 2. Has been here 6 years. American born, of American parentage. Condition supposed to be due to acute sickness or to father's intemperate habits. The child had spasms at the age of two years.

Frank is a pleasant, smiling boy of idiot grade, cannot dress nor undress himself, rarely speaks — has only a few words; drags his feet; destroys his clothing, and has the other characteristics of the low grade defective. Persistent efforts have been made to teach him something, but after a year in the school, he had not learned a letter and all that could be said of him was that he "had learned to hold the chalk a little better"; yet to look into his face, one is not surprised that the parents write that they expect he will be much improved and will be able to earn his own living. There are in this case of idiocy no stigmata of degeneration that are noticeable to the casual observer.

One glance at the chart shows that we need not call in acute disease or alcoholism or anything else except the defective germ plasm to account for this condition. The father, it is true, is alcoholic but the mother is feeble-minded and sexually immoral; she belongs to a fraternity of feeble-minded people, the children of two feeble-minded parents. Out of this family of defectives, the Training School harbors two children, the child in Case 112

being the cousin of Frank. The maternal grandfather of Frank seems to have been the only defective in his fraternity, but we find in the second generation from him a feeble-minded person, another one who is alcoholic and insane, and two that were sexually immoral. Apparently there was something wrong in the family and it cropped out occasionally.

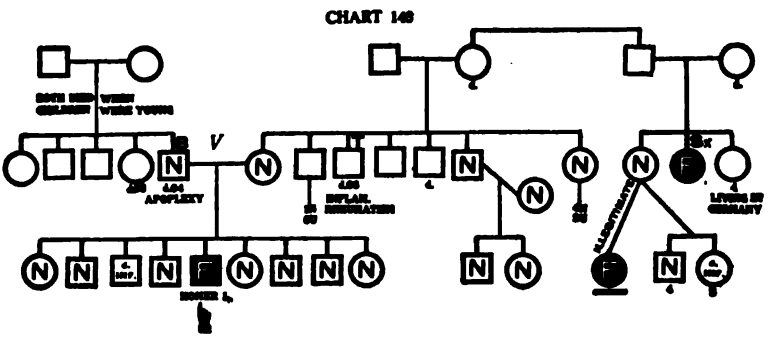


**CASE 146. HOMER L.** 31 years old. Mentality 2. Has been here 19 years. American born, of German parents. Has had whooping-cough and scarlet fever; had diphtheria at the age of 5 years.

Homer is a large, heavy boy of low mentality. He is untrainable except in simple habit formation.

This is an interesting case because for a long time we could find nothing that would indicate an hereditary character of the defect. The immediate family, so far as we could learn is normal, although it is true there were many undetermined cases. Further study, however, has revealed the fact that the maternal grand-uncle had six daughters, one of whom was feeble-minded and another, although apparently normal, had six legitimate children, and an illegitimate daughter who was feeble-minded; that daughter is now in an Institution for the feeble-minded and is considered to be on the borderline between the moron and the imbecile type. We are thus compelled to believe that the feeble-minded taint is on this grandmother's side of the family

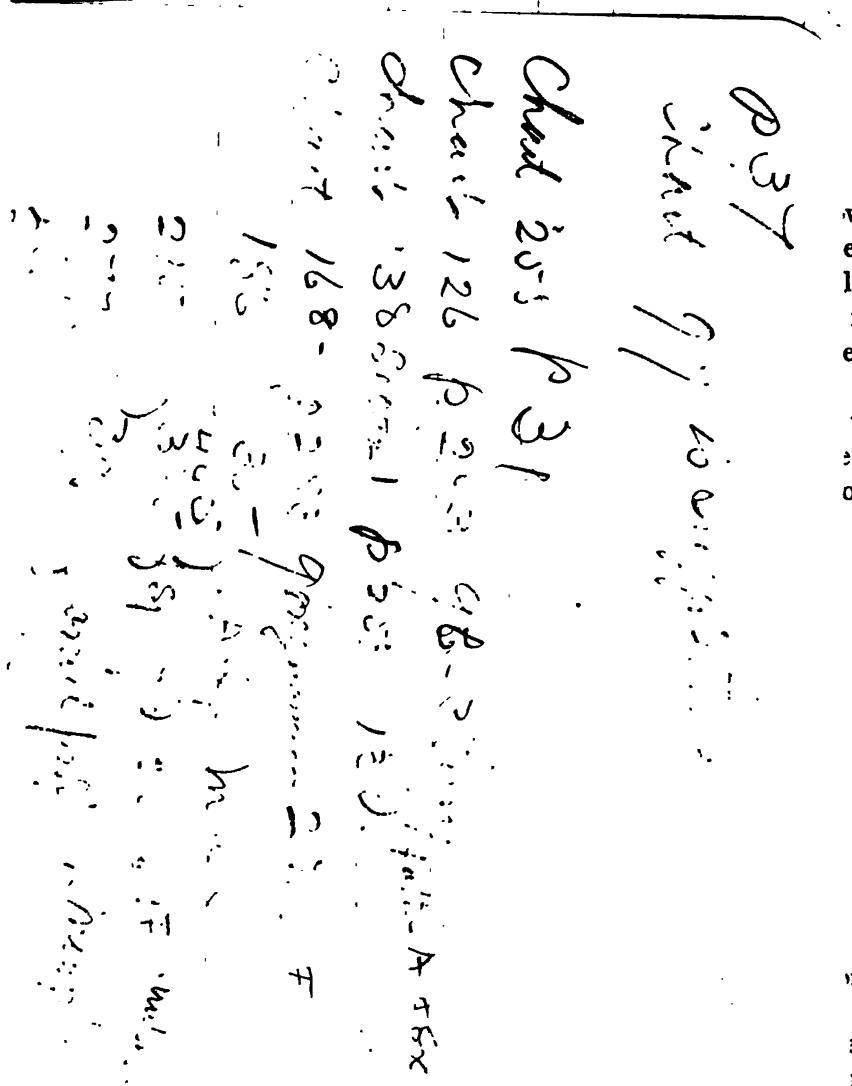

Nina is a low grade girl, unclean in her habits, has not yet learned to dress herself; not likely to change much.

There is no doubt of the hereditary character of the defect. Her father and mother were both defective and while only four children have been seen, it is entirely probable that all are defective. The father himself says they are a "set of dummies."

Nancy gives a positive Wassermann reaction.

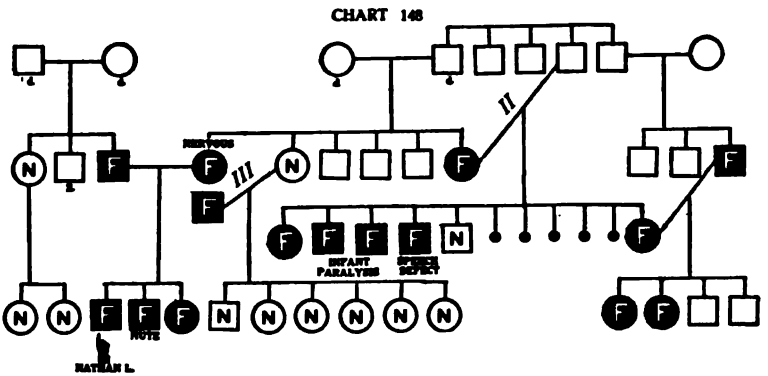


**CASE 148. NATHAN L.** 11 years old. Mentality 2. Has been here 5 years. American born, of Russian parentage. Nathan had whooping-cough at the age of six months, measles at three years.

He is a low grade child who has changed very little in the five years that he has been here. He talks almost none at all, plays a little, seems to understand a simple command. Is cheerful, but quarrelsome; active, restless, affectionate, timid.

Both parents are feeble-minded. They are young and healthy looking people. The husband works some, but has no strength of character. He has a normal sister who has two normal children; two brothers unknown and grandparents unknown. The mother has a feeble-minded sister who married her uncle, one normal sister who married a feeble-minded man but had six apparently normal children, three brothers undetermined and grandparents unknown.

There is much marrying of relatives in this family. The maternal grandfather's brother married his niece referred to above; that is Nathan's mother's sister; the result of this marriage was six children and five miscarriages. Of the children, all but one were feeble-minded; one of them, the oldest girl, married the son of another brother of this same maternal grandfather. The offspring from the marriage of these cousins

were four children, two girls feeble-minded, and two brothers undetermined.

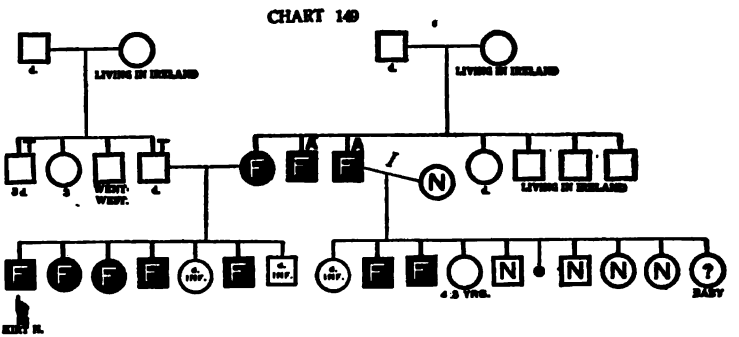


**CASE 149. KIRT N.** 20 years old. Mentality 2. Has been here nine years. American born, of Irish parents. The assigned cause is fright and fall. Kirt had convulsions as a baby, had whooping-cough at four years, measles at six years; has a central brain lesion.

This is another low grade case; does not talk and it is therefore very difficult to determine his exact mentality. There is not much that he can do, except such simple work as polishing floors and helping make beds or doing rough work with the mason. He is cheerful but quick-tempered, slow, quarrelsome, stubborn, rather quiet. A glance at the chart shows the real cause of the difficulty. The mother is feeble-minded and has two brothers in the same condition, who are also alcoholic. The rest of her sibs are undetermined. One of the brothers married a normal woman, had four children normal, and two defective, others died in infancy or were miscarriages.

The following reproduction of a bit of letter from the mother does not prove her feeble-mindedness, that was determined by other means, but this is so much like the writing of our defectives that it almost determines the actual mental age of the individual. The letter would usually be attributed to ignorance or lack of school training. We may sometime know the difference between

mental defect and simple ignorance of school formulas, and be able to read this difference in a document like this letter.

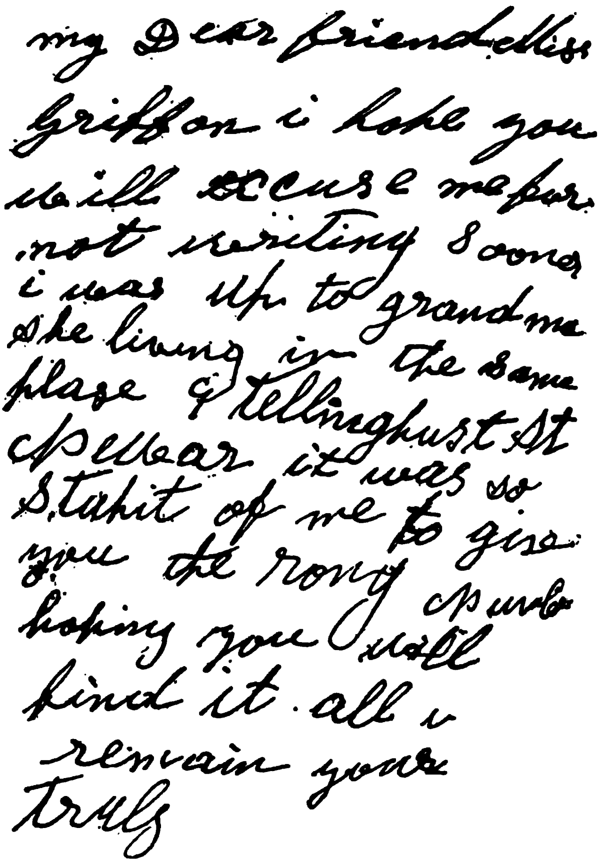
my Dear friend Miss
Griffon i hope you
will excuse me for
not writing soone
i was up to grandma
she living in the same
plage 9 Tellinghust St
Spellear it was so
Stakit of me to give
you the rong spurlo
hoping you will
find it all i
remain yours
truly

CASE 150. IZZY P. 12 years old. Mentality 2. Has been here 6 years. American born; father and mother German. Had measles at one year of age and convulsions at about two. Assigned cause of his mental defect, " the child swallowed a button."

Izzy does not talk nor dress or undress himself, hardly understands a command; will play a little; is rather cheerful, altho

quarrelsome and restless; is affectionate; he seems to have much more appreciation of life than a two year old boy, even a defective, usually has; he likes to look nice, with a new suit of clothes for example. He listens for the dinner bell and then walks over to his dinner in evident anticipation; he can carry a bowl of soup to the boys at the table but his attention is so poor that he cannot be kept at one thing long enough to be of any use.

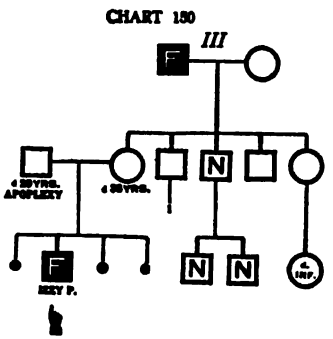


He can do the form-board in about a minute and a half, which again indicates rather more than his mentality shows, altho this is all that we can get by the use of our tests.

The family chart is very inconclusive and yet the fact that the maternal grandfather was feeble-minded would indicate that there is a hereditary taint, altho we know nothing of the mentality of the father or mother.

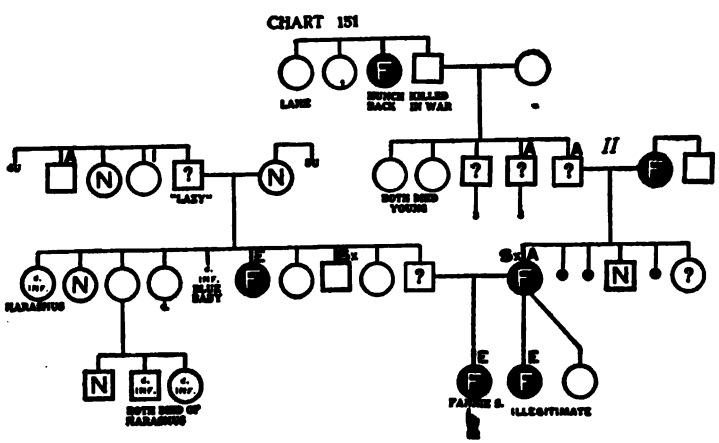


**CASE 151. FANNIE S.** 8 years old. Mentality 2. Has been here 2 years. American born; nationality of father unknown, mother American. Had whooping-cough.

Fanny is a very low grade child, cannot talk nor dress herself; weighed three pounds when born. Since coming here she has learned to feed herself but that is about the only improvement.

This is an hereditary case in a family of rather low physical tone, showing also some epilepsy, some insanity, immorality, alcoholism and other less significant physical and moral defects.

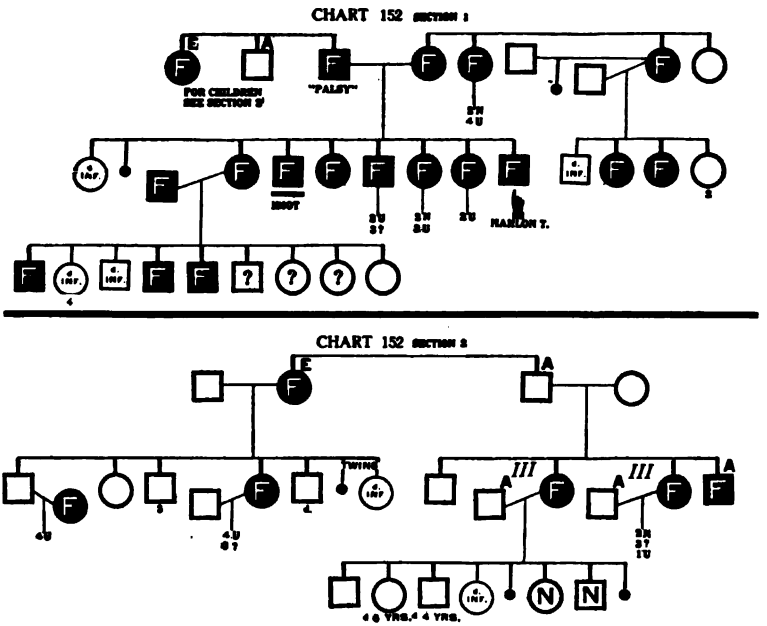


**CASE 152. MAHLON T.** 25 years old. Mentality 2. Has been here 12 years. American born, of German parents. Assigned cause, "perhaps the bite of a spider, poison in the blood."

This is a low grade case of whom not much can be said. He talks very little and very indistinctly; will eat garbage; can do practically nothing; sometimes helps a little in dressing other children; is very quiet and slow; has chronic Bright's disease. His attendant says "this pupil seems indifferent to everything but his meals."

CASE 152, MAHLON T., AGE 25. MENTALLY 2. (top left)
CASE 160, DOROTHY E., AGE 20. MENTALLY 1. (top centre)
CASE 151, FANNIE S., AGE 8. MENTALLY 2. (top right)
CASE 164, NORA X., AGE 25. MENTALLY 1. (lower left)
CASE 159, CURTIS D., AGE 31. MENTALLY 1. (lower right)

Turning to the family history we find a number of low grade defectives. There are at least three cases of idiocy; a large number of the rest are low grade. In other words, here is a family where the intelligence is so low that even the layman can recognize the defect, and has no difficulty in seeing the definite transmission of that defect from one generation to the next.

Mahlon is the ninth child in this family. The first died in infancy and the second was a miscarriage. All the rest are feeble-minded. The parents of this family were both feeble-minded. The father had a sister who was feeble-minded and epileptic. She married and had eight children (see Section 2 of the chart), of whom one at least is feeble-minded. A brother of Mahlon's father was alcoholic and probably feeble-minded, since three out of four of his children were feeble-minded. (See Section 2.)

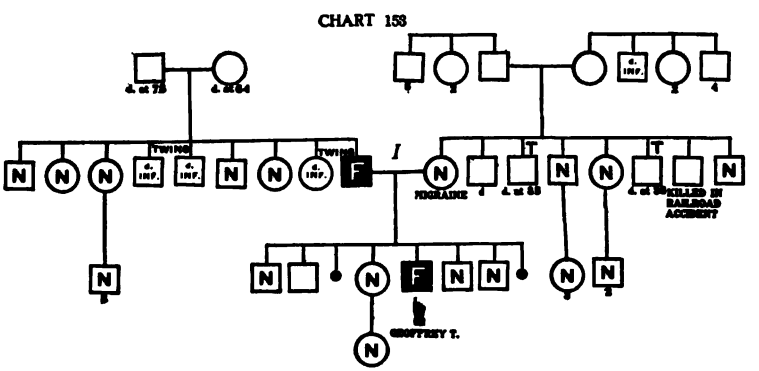


**CASE 153. GEOFFREY T.** 21 years old. Mentality 2. Has been here 6 years. American born, of American parentage. Condition said to be congenital. The child has had measles, whooping-cough, cerebro-spinal meningitis, sore ears.

This is a low grade case and might possibly be attributed to the meningitis, but the family records show that the defect appeared before this illness. The mother has migraine. Geof-

frey does not talk and his hearing is defective. He is sober, silent, stubborn, quiet, excitable, forgetful. He has no working schedule and does practically nothing.

The heredity in this case may be considered somewhat doubtful altho the father seems to be distinctly feeble-minded, while the mother is normal. Unfortunately we cannot determine the father's parentage. His father died of asthma at seventy-five and his mother of diabetes at sixty-four, but their mentality could not be learned.

The whole family, on both sides, is of rather low intelligence. It is not possible to say that they are distinctly feeble-minded and consequently the case rests on the one transmission.

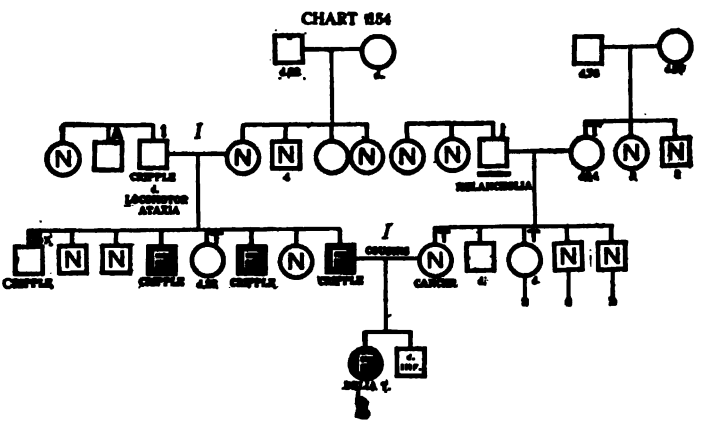


**CASE 154. DELIA T.** 16 years old. Mentality 2. Has been here 9 years. American born, of American parents. Has had spasms; measles and whooping-cough at the age of two; pneumonia at six months; has had adenoids removed.

Delia is a very low grade child; has never been able to do anything but the simplest kind of work; does not talk, eats naturally, sleeps well, pays no attention to other children; has very unclean habits.

The family chart shows a great deal of defect both physical

and mental. The father was a cripple and had stigmata of degeneration in the shape of club feet and hands.

There is also insanity in this family, on both sides.

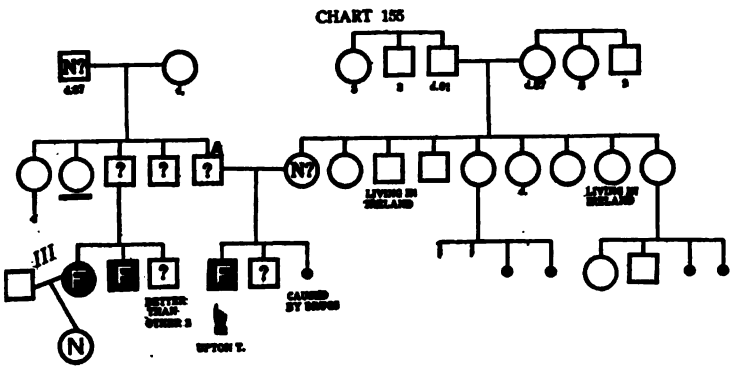


CASE 155. UPTON T. 13 years old. Mentality 2. Has been here 7 years. American born, of American parents. Instruments were used at birth; child had convulsions at five weeks; spasms from three years on; measles at six months; meningitis at seventeen months; has had whooping-cough and paralysis. Meningitis is supposed to be the cause of the defect.

Upton was an eight months child; labor very difficult. He is a low grade, untrainable child, quarrelsome, stubborn, active, restless, excitable, quick-tempered and destructive.

Upton's condition could undoubtedly have been caused by the meningitis since that is recognized as an adequate cause of feeble-mindedness, and it has probably had much to do with his low grade condition. It is interesting to note, however, that the father was alcoholic and possibly feeble-minded also; he is stubborn, quarrelsome, and cannot keep a job. Furthermore he had a brother who had two feeble-minded children. We know nothing of the mother of these two children, however, and so while probable, it is not sure that there is feeble-mindedness in the family of our boy's father. On the mother's side nothing can be learned of the relatives. A younger brother of

Upton is still doubtful. A later conception resulted in a miscarriage. It is said that the mother used drugs for the purpose of bringing about this result.

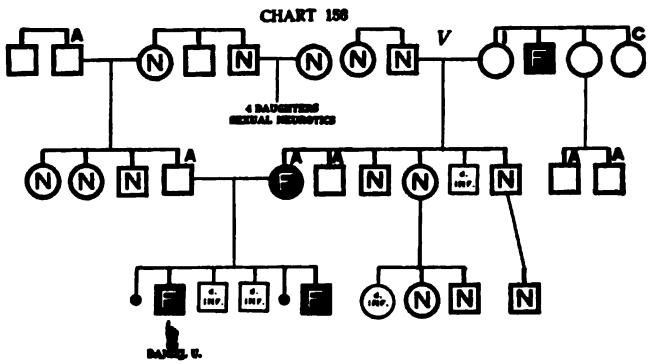


**CASE 156. DANIEL U.** 14 years old. Mentality 2. Has been here 4 years. American born, of American parents. Assigned cause, an attack of acute indigestion. He had spasms at twenty-six months and whooping-cough at the age of three years.

This is another case belonging to the idiot group and nothing can be done in the way of training except to make him happy. He has learned to smile and likes to look at pictures. Has learned to dress and undress himself and probably understands a command as he sometimes obeys.

The chart shows the undoubted hereditary taint and is interesting in other ways. We have here another example of a feeble-minded woman with an alcoholic husband, the result being feeble-minded children and children dying young. The mother in this case was also alcoholic.

Her family possibly illustrates the other side of the picture. The father was normal, the mother is said to have had insane fits, may have been feeble-minded as she had a brother who was mentally defective. In this case we would have an instance of a feeble-minded woman with a normal husband, not alcoholic.

They had three normal children, one feeble-minded — the mother of our boy, — another one that was alcoholic and one that died in infancy at the age of ten months with abscess on head. Many persons in this family, in different generations, are spoken of as having violent tempers and being queer.

**CASE 157. MORRIS W.** 32 years old. Mentality 2. Has been here 18 years. American born, of German parents. Had measles at four years; has had marasmus and had spasms at sixteen years.

Morris is a typical excitable idiot; does a little kitchen and dormitory work, scrubs like a small child; is sober, silent, stubborn.

The family history is incomplete and unsatisfactory, but it would appear that there must be an hereditary taint since three other children are defective. We have also in this family another case of twins where one is defective and the other probably normal. The defect may have come thru the mother, who was seen by the field worker and considered probably normal, altho there was some doubt. Of the father, nothing could be learned and it is possible that he may be the one who is defective.

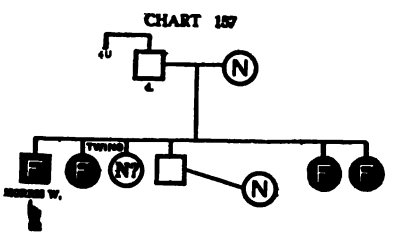


**CASE 158. CLAUDE D.** 16 years old. Mentality 1. Has been here 9 years. American born, of American parents. Had spasms and whooping-cough at four years. Assigned cause, "a fall out of bed."

Claude is of the very lowest grade and is also an epileptic. He does not feed himself; hardly knows enough to swallow; does not talk; walks but timidly.

There seems to be no doubt of the hereditary character of the defect, since a brother and sister are also defective but not epi-

leptic. The parents were normal but the mother had a brother who was feeble-minded and epileptic so that it is possible that the epilepsy may be "in the blood."

The father was immoral. His father was supposed to be normal but was shot as a deserter in the army. One cannot say that it is indicative of feeble-mindedness to become a deserter from the

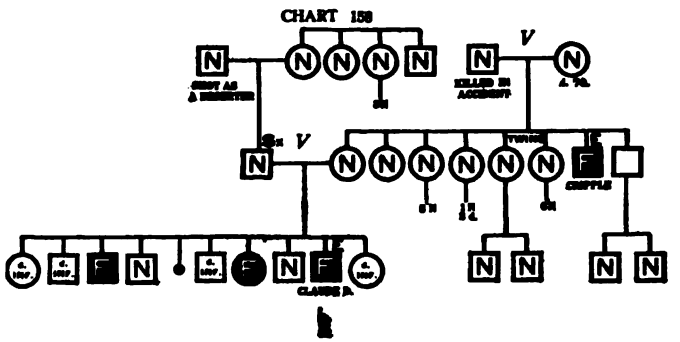


army, or that if he had not been feeble-minded he would not have been caught; but one who knows the moron boy, can very well believe that such might have been the case; and it is not comforting to think of the possibility of a feeble-minded boy being shot down in cold blood for doing what his low mentality dictated.

**CASE 159. CURTIS D.** 31 years old. Mentality about 1. Has been here 20 years.

This is a case of the lowest type of idiocy, probably due to some extraneous cause acting upon an already defective stock. In a word, the child would have been feeble-minded anyway, but something happened to lower the level to that of idiocy. As usual there is no change in such cases. This boy has remained the same for the twenty years that he has been here.

Both parents are feeble-minded. They had five children of whom two died in infancy. The two brothers living are feeble-minded but of higher grade. The father was one of a family of nine, none of whom could be determined as to their mentality,

but two were alcoholic and one was sexually immoral and criminalistic. One sister was sexually immoral and had at least two feeble-minded children. Another brother had four children, all of whom were feeble-minded and the two girls were immoral. Curtis's father and mother were cousins. The mother was one of a family of nine, of whom four brothers were feeble-minded.

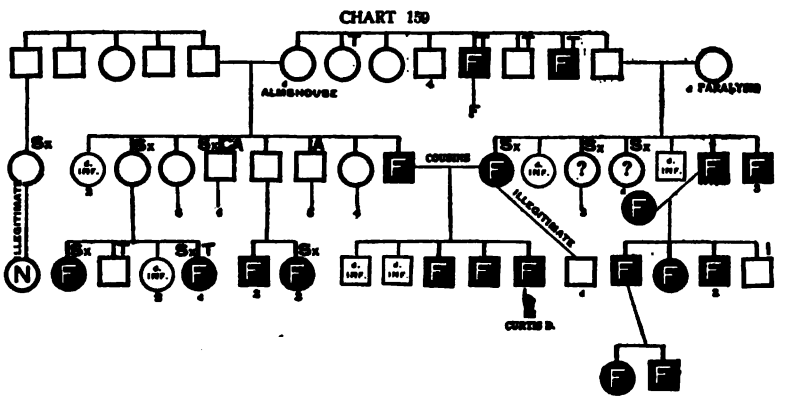


Two died in infancy and two sisters are undetermined. One of the brothers married a feeble-minded woman, had five children, four of whom were certainly feeble-minded and one of these had two feeble-minded children. Two uncles of the mother were feeble-minded and one of them had a feeble-minded child. There are many others in the family whose condition could not be determined, but enough is here shown to indicate that it is a very defective and bad family. There are alcoholism, immorality and criminalistic tendencies.

**CASE 160. DOROTHY E.** 20 years old. Mentality 1. Has been here 5 years. American born; father German, mother American. Had epileptic attacks at three years; had Saint Vitus' Dance and measles at the age of ten years. The assigned cause is " brain trouble after cutting her teeth."

Dorothy is a typical idiot of the lowest grade; walks, but does not talk nor have any intelligent life; will swing in the hammock

by the hour; bangs her head and bites herself a great deal. She is abnormally small.

It is clearly a defective family. Very little could be determined, but a younger sister is defective altho of higher grade; a brother died in infancy and another sister died at three years. The mother is feeble-minded and a cripple; her two brothers, twins, are also defective. They both have children.

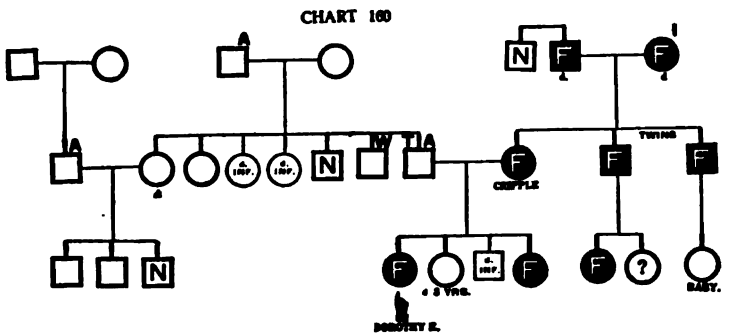


Of those of the elder, one is feeble-minded and the other is backward, very probably feeble-minded. The father of Dorothy is alcoholic and tuberculous. The maternal grandparents are both feeble-minded.

The question arises in all of these cases of low-grade children where the hereditary taint appears in the family, whether their condition is simply an exaggeration of the defect which exists in the family, or whether they are cases of heredity plus injury in some form. That cannot, of course, generally be determined. The fact that there is a younger sister here who is defective, but a high grade case, seems to point to the latter as the true explanation. Such cases show us that we need much more study of this problem.

**CASE 161. BERTIE N.** 9 years old. Mentality 1. Has been here 3 years. American born; father American, mother Irish. Had meningitis at the age of two, is epileptic, has had measles and whooping-cough.

This is a very low grade case, helpless and hopeless; does not talk; cannot do anything; has made no improvement in three years.

We have traced a large number of members of this family but got very little information of importance. There is very clearly hereditary epilepsy, as it has cropped out in at least four cases as shown on the chart. There is some little alcoholism

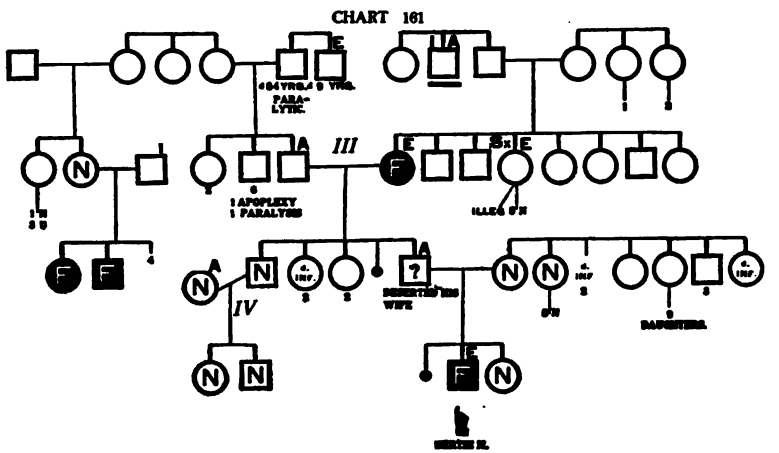


and some sexual immorality. Bertie's father may have been defective, at least he was alcoholic and deserted his wife. The wife is a normal woman, but illiterate.

In the presence of the epilepsy which is so clearly inherited it is impossible to say positively that the feeble-mindedness is a hereditary condition. It is barely possible that it is the result, or at least an accompaniment, of the epilepsy.

**CASE 162. NANCY P.** 24 years old. Mentality 1. Has been here 7 years. American born, of Irish parents. Had infantile paralysis at three years; spasms at twenty-three. Infantile paralysis is supposed to be the cause of the defect.

Nancy is a low grade case who has made no improvement except very slight changes in certain habits.

This is a case of hereditary feeble-mindedness. Probably the low grade was brot on by the disease, but it was a feeble-minded stock to begin with. The younger sisters are marked questionably normal, the question meaning that while they appear normal now, they are still quite young and it is possible

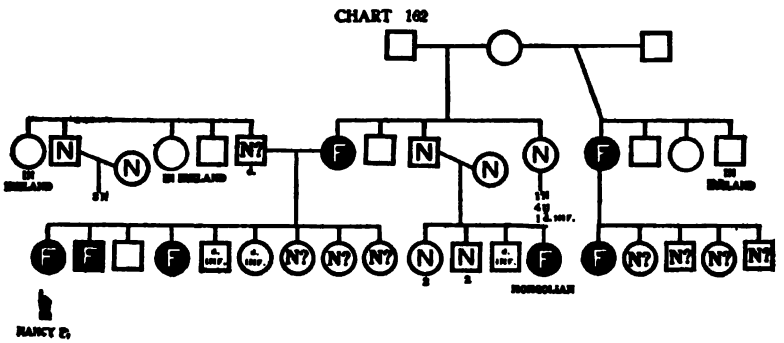


that they may show feeble-mindedness later on. There is an imbecile of the Mongolian type in this family, an own cousin to our Nancy. This is worthy of note because usually the Mongolian type comes from families of much better heredity than this one. However, in this case the immediate family is good.

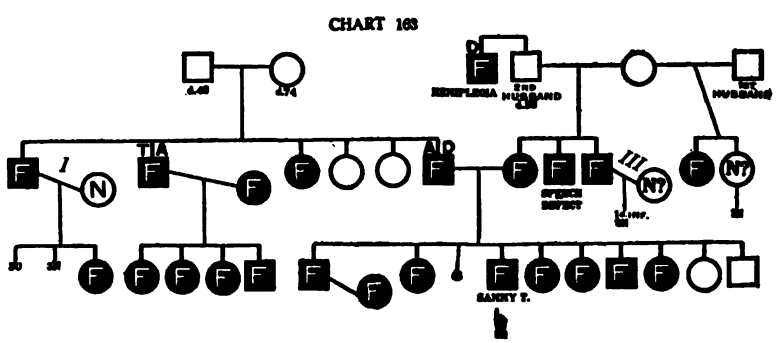


**CASE 163. SAMMY T.** 21 years old. Mentality 1. Has been here 10 years. American born; father American, mother German. Had measles at one year. Assigned cause, "fall when a baby or else the result of measles."

Sammy is an idiot of the lowest type, at the bottom of the ladder; has practically no life of intelligence.

The chart shows the thoroly defective character of the family; what is the explanation of Sammy's extreme low grade it is difficult to say, possibly the father's alcoholism. His Wassermann reaction is positive.

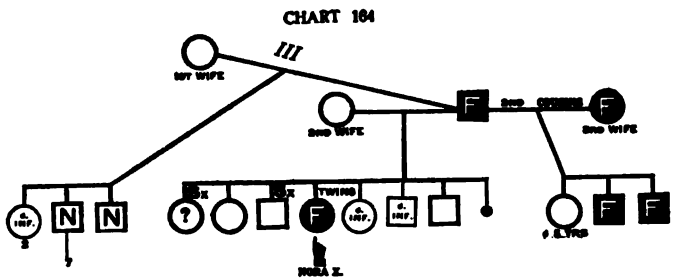


**CASE 164. NORA X.** 25 years old. Mentality 1. Has been here 17 years. Has had whooping-cough. Her defect showed at the age of six months. The assigned cause of the condition is prenatal influence, the mother was frightened by a horse.

Upon admission at the age of 9, was underweight, did not walk, could not care for herself. This is a low grade idiot, cannot talk; has to be fed; is restless, stubborn, eats garbage, has unclean habits; can walk.

A glance at the chart shows how much there is in the assigned cause. The father was feeble-minded, has been three times married. Nora is the daughter of the second marriage. There seem to be no normal ones in that family, altho she has six sibs. The father's third wife was feeble-minded and they had two feeble-minded children that died young.

## PROBABLY HEREDITARY

The following 34 cases, Nos. 165 — 198, compose the group of Probably Hereditary cases.

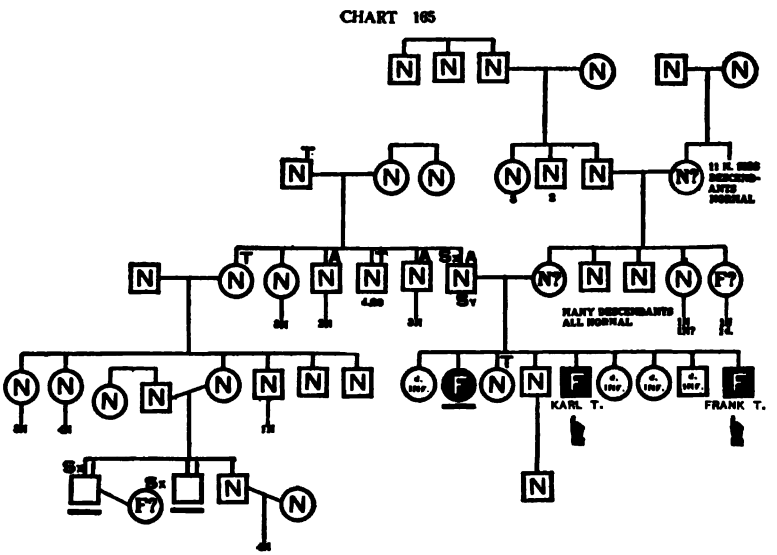


**CASE 165. FRANK AND KARL T.** American born, of American parents. Frank 17 years old. Mentality 10. Has been here 2 years. Had measles and whooping-cough. Assigned cause, " old age of parents." Karl 25 years old. Mentality 8. Has been here 7 years. Has had adenoids and ring-worm.

Karl is a fine looking boy of rather high grade; is quiet, obedient, good tempered; is slow and somewhat forgetful but does excellent work about the barn and out of doors; he writes and counts in about the usual way for one of his grade, altogether a very satisfactory Institution boy.

Frank is younger but does better than his brother; he is very cheerful, good-natured, happy; learns fairly well and is improving; does excellent work in the house, about the pantry and kitchen.

The history of this family is another puzzle when it comes to the question of accounting for the defect of these children. A reference to the chart will show an older sister also feeble-minded and in an Institution for such people. There have been four deaths in infancy, and two children are normal. Under such conditions we cannot doubt that there is feeble-mindedness somewhere in the family but it does not show in the ancestors, in any positive way. The mother is considered normal altho that is questionable. On the other hand, the father, a normal man, was of fairly good family, but he was immoral, alcoholic and syphilitic. Formerly we should have said that syphilis itself, or perhaps even the alcohol, was enough to account for the children, but the presence of two normal children between the deaths in infancy and the feeble-minded ones is very difficult to explain on the basis of the alcohol or the syphilis as their effect would thus be partial. It is probable that there is an hereditary taint of feeble-mindedness coming thru the mother's family and that under such conditions the alcohol or the syphilis may help to bring out the defect otherwise lying dormant in the family.

**CASE 166. URIAH C.** 37 years old. Mentality 9. Has been here 18 years. American born, of Irish parentage. Assigned cause, scarlet fever at the age of four. Instruments were used at birth. Child had scarlet fever at four, measles at the age of seven, scalp disease and ring-worm at eight, spasms at twenty-one.

This is a high grade case but shows marked signs of age. He came here at nineteen, had been in public school nine years with no result; has since learned to write fairly well but cannot spell; has been quite a fair worker on rough, coarse work about the Institution; of late has been more or less ill.

The family chart is very meager, as little could be learned. Taken by itself it would not indicate the hereditary character of the defect but in connection with the fact proved in other cases, that two accidents are not likely to occur in one family, we may well believe that the defect is hereditary here also.

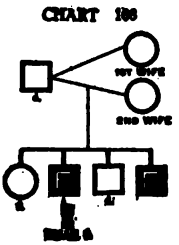

Uriah has a younger brother who is feeble-minded and we do not know anything to disprove the statement that either their father or mother or both may have been defective.

**CASE 167. JEAN S.** 18 years old. Mentality 9. Has been here 7 years. Born in Russia, of Russian parents. Had measles at four, cerebro-spinal meningitis and convulsions at nine.

When she came, she was almost twelve years old, knew her alphabet, color but not form; was not fond of music. In 1906, four months after admission, the record shows — "is better behaved; wants to do all the other children do in kindergarten, but will not work hard or long; can sing; does a little English and basketry."

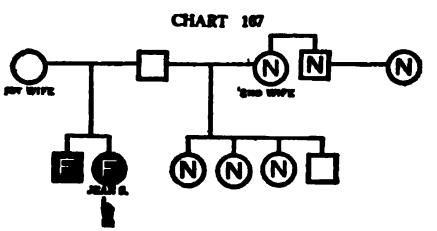


In 1908, "improved in work and conduct, in basketry a little, and in English; does well in singing."

In 1909, "is very naughty; made and furnished a doll's house as a special privilege, then was much better."

In 1911, "much improved in woodwork, does well in basketry, better in English, does well in the band."

In 1912, "does well in almost everything."

Jean is a high grade girl but is of a peculiar disposition, stubborn and obstinate.

Among those not familiar with feeble-mindedness in all its manifestations, Jean would easily pass for a normal, tho ignorant,

**CASE 166, URIAH C., AGE 37. MENTALLY 9. (bottom)**

child. She expressed a great desire to study German and partly to please her and partly to make an experiment in teaching such a child, special lessons were given to her; but, altho the best methods were used and a great effort made, nothing was accomplished. She seemed unable even to associate the German names with the familiar objects, and at the end of a considerable period, knew nothing more than the names of a very few objects. She is, however, an excellent Institution helper, is well trained and can do good work under direction. She is a little inclined to be stubborn but generally is affectionate and willing.

Unfortunately the family chart is lacking in everything that we want. It has been absolutely impossible to get any data in regard to the mother, or her family. The father is said to be normal, but the only evidence we have is the fact that by the second wife he had only normal children.

Jean's older brother is defective like herself; this would point to the probability that there is a hereditary defect.

**CASE 168. DAVID B.** 33 years old. Mentality 8. Has been here 21 years. American born, of American parents. Has had spasms, whooping-cough, scarlet fever, diphtheria, and grip.

David is a strong, vigorous, simple-minded boy who would pass many times as simply ignorant. He has acquired considerable ability in music and plays cornet solos very nicely. This is his one accomplishment. He can do very little in reading or writing; can add twelve and nine on paper but cannot tell four and two, if asked. This is true in spite of the fact that he has had most elaborate training, and at one time could add columns

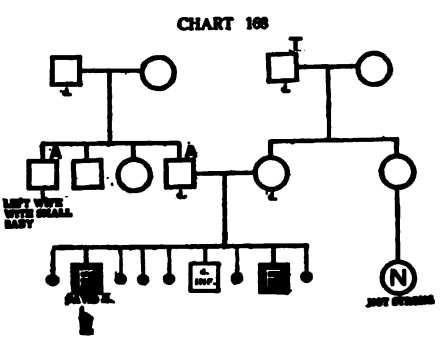

of figures on the blackboard. He is generally pleasant and agreeable, and a good worker at whatever he can do. Has worked in the shoe-shop and boiler house and helped one of the janitors.

It has been difficult to get any extensive data in regard to this family. His musical ability is said to have been a family trait.

David is the oldest living child. The next younger boy died at two. A younger one is living; has "learned the plumber's trade" but does not work at it on account of physical disability; is a moron. There were six miscarriages. The mother is undetermined but was said to be of good family. The father was alcoholic and abusive. Our boy had typhoid fever when very young and was also bitten by a dog. His defect is said to date from that time.

CHART 169

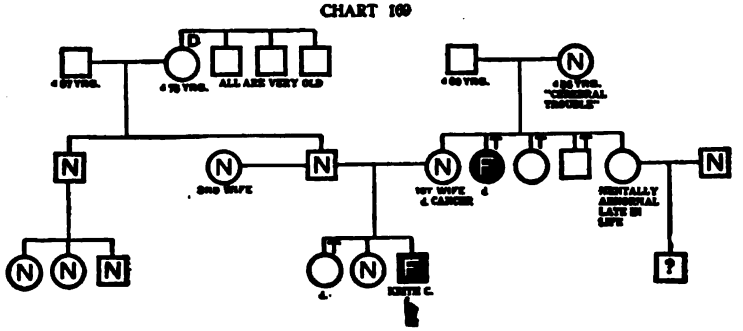


**CASE 169. KEITH C.** 26 years old. Mentality 8. Has been here 8 years. American born, of American parents. Had convulsions at the time of dentition; has had measles and whooping-cough. Instruments were used in delivery. Assigned cause, " lack of brain development in utero."

Keith is a nice looking boy, rather undersized, but with a refined countenance, which would seem to indicate good parentage; has about the usual history for children of his mentality. In the matter of the three R's, he does not write a very good letter, spells badly, and his construction is very poor. He takes an interest in what he does; assists the electrician and other persons on the grounds; needs little or no supervision in the case of

anything that he has learned to do, but finds it very difficult to take up a new occupation. His speech is a little defective but easily understood. Keith has evidently inherited a great many good qualities and by the casual observer would be considered much more intelligent than he proves to be.

A study of the family history indicates that there is a defect on the mother's side, altho the mother herself is normal. The father's family is thoroly intelligent and normal. Keith has two sisters, both probably normal, one died of spinal disease. The mother had one sister, who was feeble-minded and one, who was "mentally abnormal late in life." It has not been possible to determine what this means. It sounds more like mild insanity than feeble-mindedness.

CHART 170

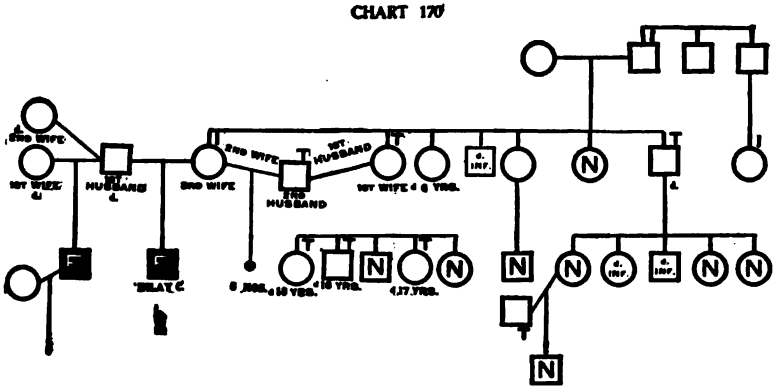

**CASE 170. IMLAY C.** 20 years old. Mentality 8. Has been here 11 years. American born, of American parents. Had typhoid fever at the age of six years, supposed to be the cause of his defective condition.

Imlay is a high grade case; upon admission at the age of six it was recorded that he had a large head and that he did not seem to grow; he understood a command, was obedient, knew colors by name, memory was good, was fond of music.

After admission he improved a good deal for a time, worked well, did kindergarten weaving, sewing and simple folding;

could tie his own shoes; could use scissors. A year later he was still in the kindergarten but had greatly improved; could do some basketry and drill work. Three years later had made some progress in number work; could add thirty-five, twelve and forty-six; could subtract twenty-five from ninety-six and similar problems. The next year he learned to knit fairly well. Two years later it is recorded that he worked very poorly and slowly, was fond of fire and could not be trusted.

He was exceedingly attractive when young and gave rise to great hopes that he might improve wonderfully. He is now morose and quiet, dull and stupid, does well when he works, but will work very little. He is very moody; is considered sly and peculiar; there are some indications that he is suffering from brain disease as well as the arrested development. He can talk distinctly but is rather reticent.

The family history perhaps helps to explain his condition.

Imlay is the only son of his father and mother. Their mental condition is not known except that the mother was insane. The father had been previously married and had a feeble-minded son by that wife also, which would seem to point to a defect in the father, but nothing more is known of him. The mother's family is one of the cases where there is considerable closely related insanity. As said, the mother herself was insane, her father was insane and his brother had a daughter who was insane. In addition to that, there was a great deal of tuberculosis in these three generations.

It is seen that probably the typhoid fever was only a contributing cause.

The following is a sample of Imlay's letter-writing —

Vineland, N.J.
April 1, 1910.

"My dear Mother

I hope you are well and happy. did you enjoy your birthday and wasn't you glad to get the nice

birthday letter. I received the pretty postal card that I got for Easter and I was pleased to get it and the two callars and fourhand tie. We had an entertainment last Wednesday night and it was giving by two of the teachers and it had a whole lot of fun in it and it was called the Bill Posters Dream and all the boys, and girls, laughted while it was going on and it was so funney that every body in the Hall laughted and we all had a good time and enjoy it very much I hope that grandma is well and happy all right I will close with lots of love

Your loving Son"

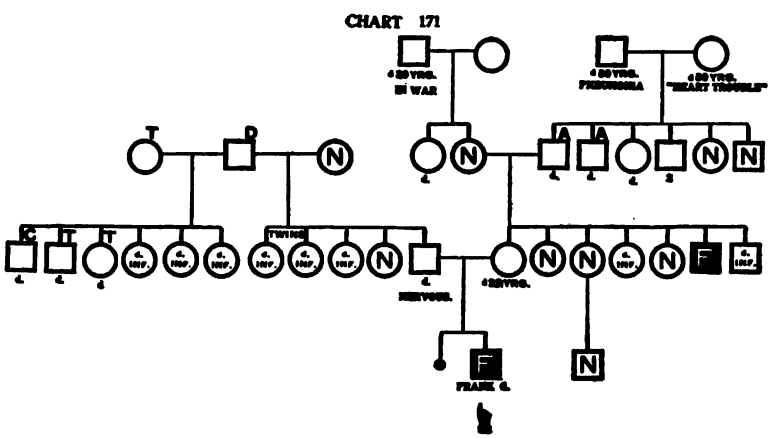


**CASE 171. FRANK G.** 17 years old. Mentality 8. Has been here 6 years. American born, of American parents. Had spasms at four months; had slight chorea; had measles at eight years.

Frank is a moron with some nervous instability; one leg is shorter than the other and he walks badly. His speech is not distinct unless he speaks very slowly.

Upon admission at the age of eleven, he knew his alphabet, could count to fifty, could write a little; had been in kindergarten for two years and the public school one year; could add sums less than ten, could subtract and multiply.

After admission he learned to read and spell easy words and wrote a good many words; made some little progress in wood-working but this was very irregular and never amounted to much. Even housework, he has never learned to any great extent, at least is not trustworthy in this direction. He is an errand boy and does this fairly well. He is good natured, but very sober. He now shows symptoms of dementia præcox.

The family chart is another difficult one to interpret. A maternal uncle of Frank's is feeble-minded, but we know nothing of the condition of the parents and consequently dare not say positively that this is a hereditary taint. The maternal grandfather was alcoholic and may have been feeble-minded.

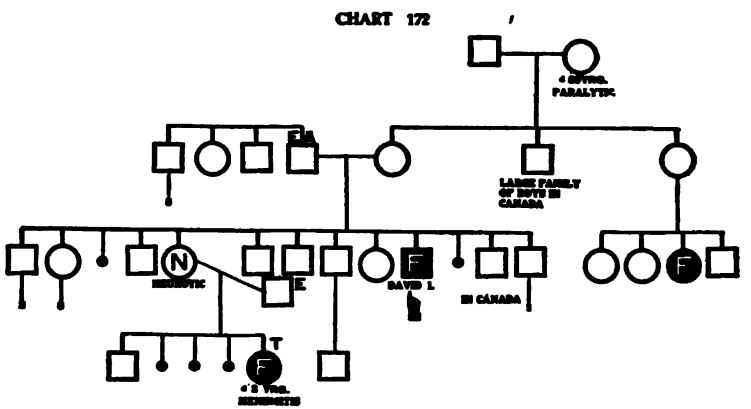


CASE 172. DAVID I. 26 years old. Mentality 8. Has been here 10 years. Born in Canada, father Canadian, mother English. Had convulsions at four months, whooping-cough at one year, measles at four years. Was a case of instrumental delivery; his birth was very difficult being a breech presentation. He had convulsions at four months. Mental defect said to be due to the convulsions.

David is a strong, heavy-set boy, rather slow, but does a good deal of work, particularly around the barn and dairy. He never got very far in his school work, perhaps because he was so old when he entered the School. He was seventeen at the time and

could not read nor count; could copy some and do a little housework. He seems to have found his place in the barn work and is much appreciated by the dairymen.

It is almost impossible to evaluate the possible causes of David's condition. His father was alcoholic and epileptic but nothing else is known. A cousin from the mother's side was feeble-minded, died of tumor on the brain said to have been brought on by a blow. A nephew of David's was feeble-minded; these facts are not very conclusive, and yet they would indicate that there is bad protoplasm in this family.

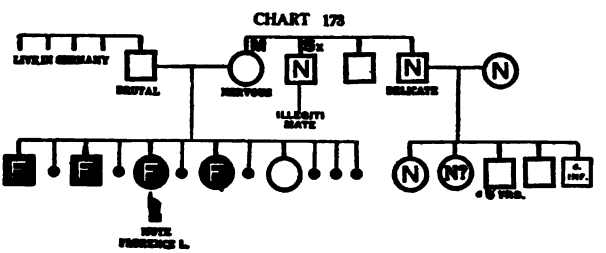


**CASE 173. FLORENCE L.** 25 years old. Mentality 8. Has been here 15 years. Born in Switzerland, of Swiss parents. Came to this country when five years old. Supposed cause, "convulsions at the age of three months." Had acute meningitis at 6 months, measles at the age of seven years and whooping-cough at eight.

This child is deaf and dumb and were it not for this she would undoubtedly show higher mentality, both because she would be able to pass our tests at a higher age, and because she would have developed the mentality she has, to a greater extent; nevertheless, it is clear that she is feeble-minded.

At the time of admission at the age of ten, her head was large; she could dress and undress herself; her speech, what little she had, was very imperfect; she was gluttonous; would occasionally eat garbage; had bad habits. She is relatively high grade and quite intelligent. Makes a great effort to speak and has learned to say a few words. Can write a fair letter, has never

learned to do much with numbers and indeed makes no great use of any of her book knowledge. She does dormitory work, can do sewing, make button holes, sew on buttons and use the sewing machine. She is affectionate, good tempered, willing and tries; she is quick, sometimes stubborn; makes her eyes take the place of her ears to quite an extent. For example, can follow the other girls in the gymnasium work by watching their motions attentively. She has, however, long since reached her limit of development and now does only routine work.

Her family history is naturally incomplete since she was born abroad; altho her mother has some relatives in this country. Of the father's family nothing is known. He is said to have been very brutal; would not work, never supported his family, and finally deserted them.

Florence has two older brothers and two younger sisters, these are considered by the mother to be normal and they certainly would pass for normal in the eyes of any one but an expert, who would recognize them as defectives of the moron type. The mother has had seven miscarriages; suffered from migraine and is rather delicate, but keeps a neat home and has kept the family together successfully.

The meningitis may account for Florence's defective hearing, but apparently there is an hereditary taint in the family and quite possibly she would have been mentally defective without the meningitis.

**CASE 174. FRANK N.** (colored). 26 years old. Mentality 8. Has been here 11 years. American born, of African and American parentage. Has had measles, whooping-cough and conjunctivitis. The cause of the condition is supposed to be sickness.

This boy is one of four children, the two older being normal, the youngest died at birth with the mother. Another cause of this boy's defect is said to be a blow on the head, received from a heavy piece of iron at the time he was four years old.

The probability of hereditary defect comes from the fact that one of the mother's sisters had a defective child. All of the father's family are normal and they are a respectable colored family. Of the mother's sibs and parents, practically nothing is known, as they are in the South. As a child, our boy's defect was not noticed. He was sent to school but could never learn

CHART 174

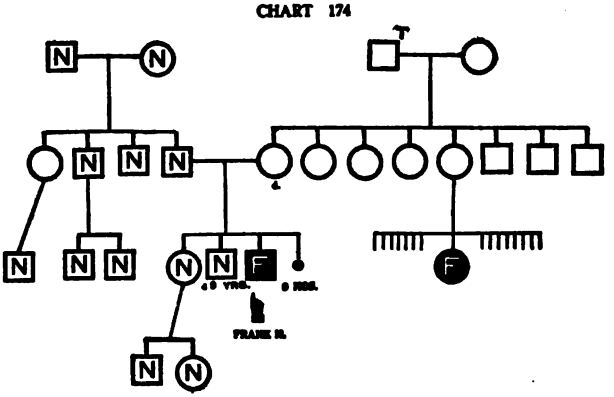

anything. From being a healthy child, he developed one sickness after another and was constantly ailing. Now he walks one sided, is not obedient, is fond of music, excitable and nervous; is fond of play, is not truthful nor trustworthy, is sly, obstinate, passionate.

**CASE 175. IVA X.** 41 years old. Mentality 8. Has been here 13 years. American born, of American parents. The child was nursed by the mother; was strong; the defect was not noticed until eight or nine years of age. It was thought to be the result of a shock to the mother during pregnancy.

The father was sixty-one years old and the mother forty-one when Iva was born.

Iva is a very normal looking woman, of good countenance; can do about the usual amount of reading, writing and counting for a child of her mental age. Her hand-writing is poor but the

structure of her letter is fairly good. She is cheerful, affectionate, willing, truthful, good-natured; has long since reached her limit in trainability and occupies herself with sewing, fancy-work, dressmaking, etc.

Iva comes of an excellent family, and many of her brothers and half-brothers are able men.

This seems to be an illustration of those cases where a man marries a second wife without being so particular as to her

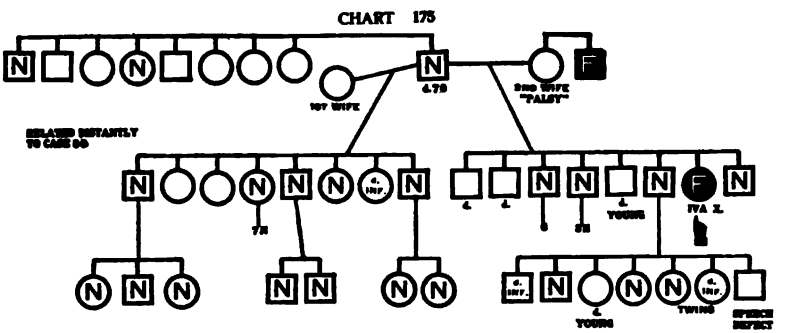


family and ability as he was of the first wife's. While we do not know that this second wife was not of normal intelligence we do know that her brother was feeble-minded, and this fact taken with Iva's condition would lead us clearly to the conclusion that this wife was at least a carrier of defect, and that defect has shown itself in Iva.

**CASE 176. KURT D.** 24 years old. Mentality 8. Has been here 11 years. American born, nationality of parents unknown.

Kurt was thirteen years old when admitted, did not understand language very well, was not always obedient to command, speech imperfect; did not recognize color or form, could not completely dress or undress himself. He came from the Almshouse.

After admission he improved very rapidly. In the course of four years, he had learned to read in the First Reader and to

CASE 173, FLORENCE L., AGE 25. MENTALLY 8. (top left)
CASE 176, KURT D., AGE 24. MENTALLY 8. (top right)
CASE 177, BYRON D., AGE 25. MENTALLY 7.
CASE 180, THEODORA X., AGE 36. MENTALLY 7.

write; could make simple number combinations, knew all colors, could remember two or three facts in a story. He never got farther than this with his bookwork, but did very good basketry, was also good in woodwork; learned to knit, and became one of the best workers in the mending room.

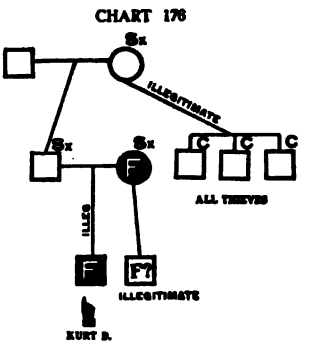


The following extract from the Field Worker's report is the best account we can give of Kurt's family. While it contributes nothing to our study of the heredity it shows a social condition that is indeed appalling.

February 28, 1910.

"Of all the doleful days I have ever spent, and of all the hideous abodes of squalor and crime I have ever entered, Friday February 25th, 1910 stands out alone and unequalled. The veritable 'Hexen Kuche,' is to be found in South Jersey, where imps and devils preside.

"When I stopped to see Mr.——he seemed to know very little, but as I pressed the matter there were many questions he could answer. First 'Kurt's' father had 'gotten in' with a good many women not Kurt's mother, and the mother of Kurt had had similar experiences with men not his father; the family in all its connections is the lowest of the low, living in remote cabins that every now and then vomit forth their brood to be a pest in the land, and to finally go and fill our jail and almshouse records. Lucky the boy that finds entrance in an Institution like Vineland!

"The information was all of an indefinite character except that the grandmother was living in a cabin about a mile away. I had time before my train went, to go to see her, so I started at once. The day was raw and cold, the poverty of the entire

neighborhood appalling, so that my spirits were already running very low. It was the presiding witch herself who opened the cabin door and stood frowning on me. She could not at once grasp the situation nor answer my questions intelligently. With all my heart, I wished to turn back, and run, but instead I said, 'Perhaps you will let me come in and then perhaps I can make the matter clearer to you.' She led the way into the inner room where a woman and man were sitting bundled in heavy outside wraps. The latter looked like a desperado such as one reads about in books. He wore heavy boots, with his trousers tucked into them, his hands were thrust into his pockets, while a great plush cap rounded out the contour made by his jet-black shaggy hair and beard. A pair of jet-black eyes glistened under heavy eyebrows, his feet were on the cook-stove and his chair tilted back. He did not offer to move as I entered, but later when he rose I saw that the cabin ceiling was too low for him and that he was a giant in strength and limb. The woman opposite him was of the same type and both are doubtless travelling the same road.

"The old woman was brown and shriveled, a three cornered shawl covered her head; deep and repulsive lines on her face told of the unholy life she had lived.

"To make room for me, she pushed the revolting remains of the day's dinner away from one corner of the table and I sat down. The facts I obtained were meager, for as it proved, her daughter was not the mother of Kurt, but only one of the women his father had 'gotten in' with before he 'got in' with the mother.

"The names all these people go by, seem to mean very little. Surely, they are not hallowed by the record of any baptism, and I doubt if any legal records give them a right to the name they bear. At present the old woman goes by the name of Doyl but she is the mother of a batch of Adley boys who earn their living mainly by stealing. The mother of Kurt went by the name of Emily Core and lived about ——, still further down in Jersey.

She has a boy called Isaiah D. but not belonging to Kurt's father, who lives in ——, if one can call an existence like his living. The grandfather was George D., living in —— and there were other brothers and sisters. Whether the old woman was born feeble-minded or whether it is only the stupor engendered by her hideous life I do not know, for she does not belong to any category I have yet encountered. Certainly such a woman, let her condition be one way or the other, has no right to continue to exhale her renown over the land and to afford the hideous protection to vice and crime which she is certainly doing. I left her with feelings of loathing and disgust, such as human beings seldom engender in me. I had three-quarters of an hour to wait for the train after I reached the dingy little station, which was only a shed. It was too filthy to stand in, so I went out into the bleak cold wind. Soon the woman whom I had seen bundled by the stove in the cabin I had left came up. She was going on the same train. Her instincts were sociable and she attempted to interest me in her life."

CASE 177. BYRON D. 25 years old. Mentality 7. Has been here 11 years. American born, of American parents. Had measles and whooping-cough. Condition said to be congenital.

Byron was admitted at the age of fifteen, at that time it is recorded —

"interested, works his hands with a nervous movement, when displeased draws lips back from his teeth and looks like an animal. Talks in a babyish manner, reads, counts to one hundred, can add, subtract, divide and multiply; knows no colors but red and blue. In school goes with six year old children. Can do an errand and some housework, also some barn-work; is fond of babies and animals."

Here he learned to read in the Second Reader but could not spell well, appeared lazy, could write nicely from copy but nothing without it. It was found that the hot weather affected him very seriously and seemed to make him crazy.

Our first Binet test also indicated insanity, thru the scattering which appeared. This condition developed and a few months ago he had to be transferred to a State Hospital.

Again the family history pretty well explains Byron's condition. He is one of three children. The oldest died in infancy probably from neglect, the next, a girl, is married and has three children of whom one, at least, is defective. The last one is too young to determine. The middle one appears normal; it is not possible to say surely. This case is interesting as being one of

CHART 177

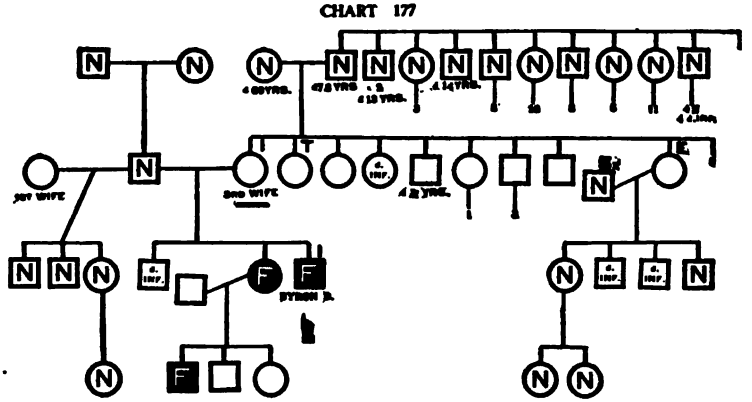

those that are connected with insanity. The father's family seems good and the mother's parents were probably normal and her uncles and aunts were normal. The cousins so far as known are also normal altho many are undetermined. The mother has a sister who was epileptic. She married a normal man, however, and there are no defectives among the descendants. The mother herself is insane. Her first attack occurred shortly after the birth of her child. She recovered from that, but at the birth of the second child, the same condition again resulted. When Byron was born, however, there was no insanity. Later it developed and she is now in the State Hospital.

CHART 178

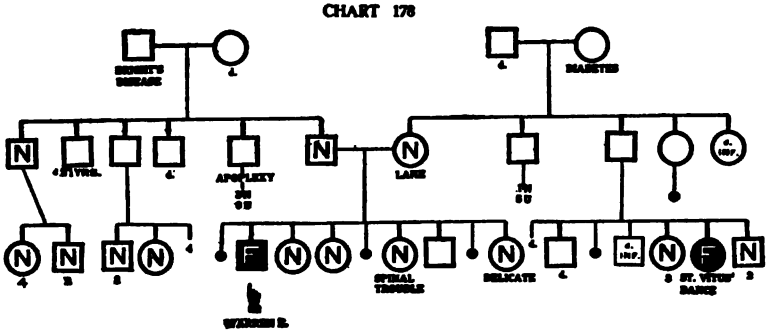

**CASE 178. WARREN E.** 28 years old. Mentality 7. Has been here 15 years. American born, of American parents. Had convulsions at 20 months; has had measles and muscular rheumatism. Condition said to be congenital.

Warren was thirteen years old when admitted, had small forehead, upper portion of the head large, leaned forward when walking, muscular coördination poor; had no idea of color or form, did not know the alphabet, had attended public school two terms. The defect is said to have appeared between eleven and twelve years of age. Mother had sick headaches. Warren has never been able to learn anything from books nor make any approach to skilled work; he makes beds, cleans floors in the cottage and does such rough work.

A cousin is feeble-minded. There are many individuals undetermined and it is probable that there is hereditary defect.

**CASE 179. GUS N.** 28 years old. Mentality 7. Has been here 6 years. American born; father Irish, mother American. Supposed cause of condition, " acute sickness." Has had whooping-cough, scarlet fever and Bright's disease; also diphtheria, grippe and uremic convulsions. The family physician asserts that the child was nearly smothered at birth. The defect was noticeable after the attack of grip in his seventh year.

Upon admission at the age of twenty-one, he knew the alphabet and could count to a hundred by fives. He has learned somewhat, can write a little and read a little, but like all such

cases is better in industrial work. He works with the gardener all day, talks distinctly and quite sensibly; does ordinary work; is slow, not able to move quickly; timid, not very cheerful, willing and tries; cannot learn a new occupation quickly; works in the shoe-shop, can do housework or work about the barn; is somewhat cranky and quarrelsome, sometimes very profane, not always truthful or honest. This case is less conclusive than many of the hereditary character. The diseases enumerated for this child would seem, according to the general idea, to be

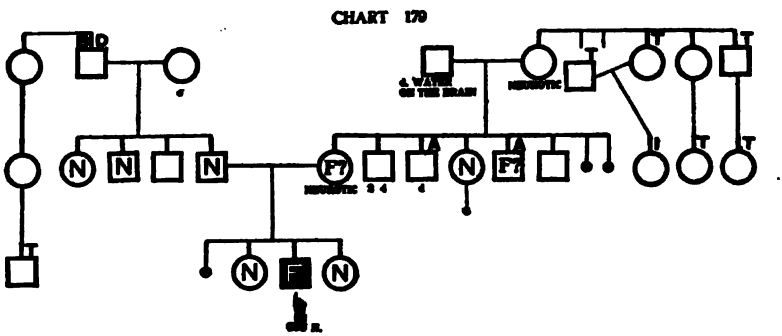


able to account for his condition. Nevertheless there are other indications. The father's family as far as we know is thoroughly normal. The father himself was an able man. The mother is decidedly neurotic and very probably could be called feeble-minded. She has a brother who is alcoholic and probably also feeble-minded. Another brother is alcoholic. Their father died of "water on the brain." The mother died at the advanced age of 83. Her mind failed before death. A cousin of our boy's mother was insane. There was considerable tuberculosis also on her side. So that it is fairly clear that we have a morbid heredity, if not a distinctly feeble-minded ancestry.

**CASE 180. THEODORA X.** 36 years old. Mentality 7. Has been here 22 years. American born, of American parentage. Assigned cause, "the father treated her brutal in infancy."

Theodora is a high grade imbecile. When admitted at the age of 14, she had not learned to read nor write, but has learned since; can now write a fair letter but makes little use of her ability in this direction. She is a very typical girl of her class, does well in housework, can do sewing and crocheting but cannot count the stitches. She is usually sober, quiet, affectionate, willing and tries, truthful, excitable and sensitive. Does not need close supervision, is easily managed when kindness is used; is a fine Institution worker; does dressmaking and pantry work; is very cleanly.

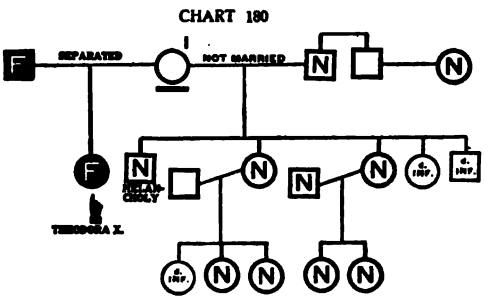


Her father is feeble-minded, her mother is in an Insane Asylum. The mother has a family of five children by a normal man to whom she was not married. These children seem to be normal and their children normal; more than this we have been unable to determine. It is, altogether, a poor ignorant family and there is some difficulty in telling where ignorance ends and feeble-mindedness might begin.

**CASE 181. WARREN L.** 34 years old. Mentality 6. Has been here 23 years. American born, of Irish parents. Cause of condition said to be scarlatina or diphtheria. Child had spasms at three years; has had measles, whooping-cough and scarlet fever, and had diphtheria at five years.

Warren was twelve when he came to The Training School; shuffled one foot; mouth was usually open; could dress himself; understood language but was not obedient; speech was imperfect. He had not been to school for four years and so it was said he had forgotten much that he had learned. He could be managed by persuasion but was excitable and nervous. Two

years later he had not improved much in school and did not like the boys. A year later the report is, — "school progress not great." Four years after that, — "no school progress but a real help in laundry and cottage." He has for some years been an excellent helper in the Institution, especially in the laundry and cottage; takes care of small children nicely.

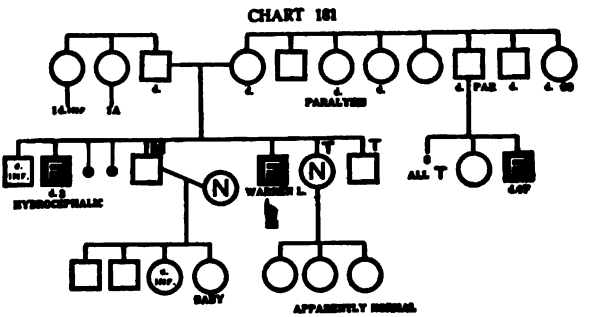


He is a typical simple-minded man such as is to be found in almost any community and, relatively low grade as he is, would not be thought of as feeble-minded by a great many people.

It has been difficult to get information in regard to his family and it will be seen from the chart that many persons are left undetermined; there is, however, enough to indicate that there must be defect in the blood. An older brother is distinctly feeble-minded and a cousin on the mother's side is also defective. This might indicate that the defect had come through the mother, altho that is of course undetermined.

**CASE 182. BENNY L.** 42 years old. Mentality 5. Has been here 23 years. There has been very little change in him in all that time. He could not speak at all at four years of age. Has had smallpox.

He speaks very indistinctly, can hardly be understood by a stranger; helps in the garden, is a good worker, takes care of one horse; does not any longer need close supervision; is easily managed; has a very low forehead and a small head.

CASE 181, WARREN L., AGE 34. MENTALLY 6.
CASE 182, BENNY L., AGE 42. MENTALLY 5.
CASE 183, MATTHEW N., AGE 28. MENTALLY 5.

The heredity chart is very incomplete. The father of Benny is feeble-minded. Nothing is known of his family except that his brother and the two children of this brother died of tuberculosis. The mother is said to have a bad temper, is excitable but very ambitious. She is certainly not of high mentality but cannot be called feeble-minded altho she may be a border-

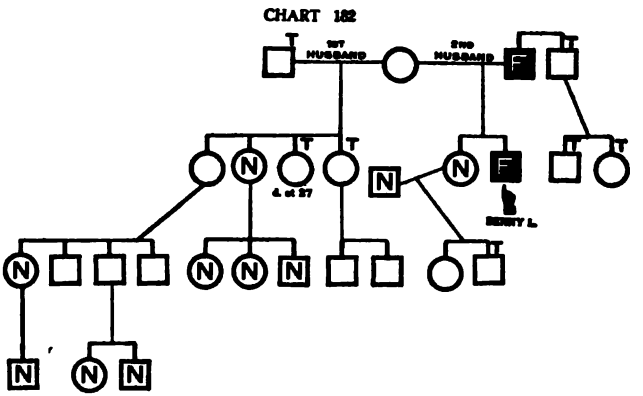


line case. Benny's father is her second husband. Nothing is known about the first, except that he had tuberculosis. By him she had four children, none of whom are known to have been defective, neither are the grandchildren nor the great-grandchildren.

**CASE 183. MATTHEW N.** 28 years old. Mentality 5. Has been here 15 years. American born, of American parents. Had whooping-cough at the age of three and measles at twelve. Supposed cause, "mother stepped on child's head when one year old."

Matthew was thirteen years old when admitted; speech slightly defective; could count a little; could handle tools and do an errand; excitable and nervous but easily managed; learned to know colors and copy forms very neatly; could print his name from copy. He never got beyond making a few letters and figures and counting to ten. At present he works about the

cottage, making beds, doing a little scrubbing; folds papers, etc. His habits are good; he has a hernia and is not able to do any hard work.

This is a family in which it has been impossible to get much definite information. Matthew is one of thirteen conceptions of which seven resulted in miscarriages or still births. One sister is said to be normal. An older sister is feeble-minded. Of the father's family practically nothing is known except that his brother and his father had paralysis. The mentality of the

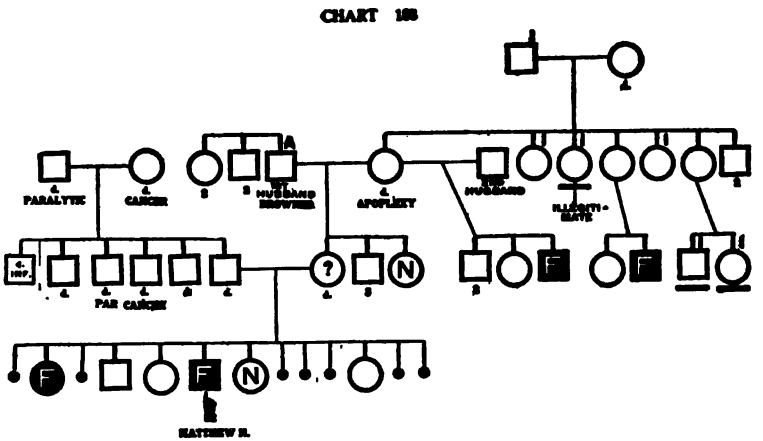


mother is undetermined. She had a normal sister. Her mother was twice married and by another husband had a feeble-minded son, also one of her sisters had a feeble-minded child. This would seem to indicate that the defect has come thru the mother's family and thru her mother. The great-grandfather on the maternal side was insane; also two of his grandchildren, and three of his daughters, the sisters of the maternal grandmother, were insane.

CASE 184. GERTIE T. 22 years old. Mentality 5. Has been here 11 years. American born, of American parents. Has had whooping-cough. Instruments were used at delivery. The case is said to have been congenital.

Gertie's history in the Institution is the usual one for girls of her type. In the beginning it was said "her capacity is good, speech perfect, knows alphabet, does not read nor count, knows color and form, is fond of music, sweeps, washes dishes, etc., is affectionate and fond of play, usually managed by coaxing"; four years later, "knows color and form, can sew on a button without help"; two years more, "can weave a simple kindergarten mat with help"; a year later, "cottage girl." In the

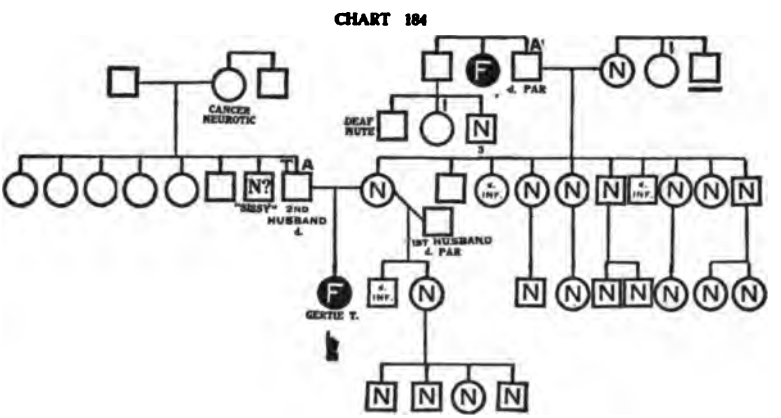


cottage she tries to help a little but does not accomplish much. She is a strong, well-built girl with clean habits.

The hereditary character of feeble-mindedness could never be established from such charts as Gertie's family shows. Nevertheless, the fact having been established, we can doubtless see the hereditary element even here.

Gertie's father was alcoholic but of his mentality nothing is known, nor is anything known of his family, except that a brother was called a "sissy," said to be backward and laughed a great deal, all of which may indicate mental defect but is not conclusive. On the mother's side, however, there is more trouble; although her immediate family were not mentally defective nor their children nor grandchildren, so far as we know; her father

was alcoholic and died of paralysis; he had a sister who was feeble-minded, and a brother who had five children, one of whom was insane and another deaf and dumb; this would certainly indicate some serious defect in that family. Still more, the mother's mother had a sister who was insane.

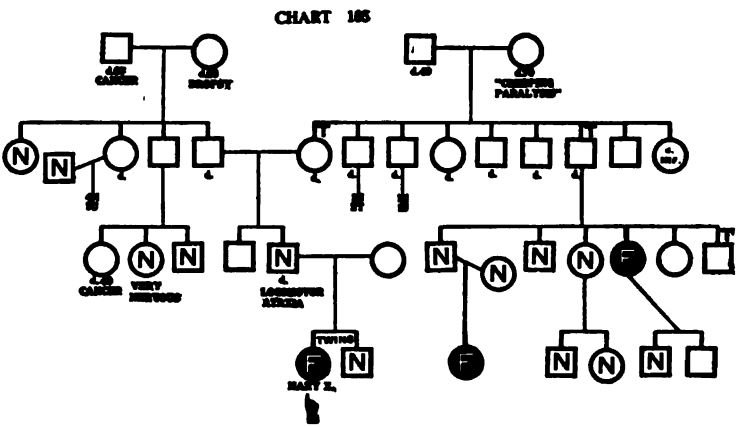


**CASE 185. MARY X.** 22 years old. Mentality 5. Has been here 15 years. American born, of American parents. Has had sore eyes from birth, has scrofula; has cleft palate.

Mary was admitted at the age of six; had no school training. A year later it is recorded that she could wash herself, was more careful of her clothing; was helping with the small children, could string beads by colors by twos. Another year, she had learned to sew neatly in the kindergarten, could write numbers from one to four and understood them from one to eight; the next year learned to know words in print. She never got much farther than this in the three R's but improved in housework, and could sew on buttons fairly well; is a cottage helper.

This is another case where it is impossible to show positively the feeble-mindedness in a direct line. In one of the collateral lines there are two other cases, but it would perhaps be unsafe

to conclude surely that it was hereditary altho the probability seems to be very strong. That there is morbid heredity is perfectly clear when we consider the unusual amount of disease from which this family has suffered. Furthermore, we have here another case of twins, one feeble-minded and the other normal. The hereditary character of the defect is the only thing that easily explains such a condition.

CHART 186

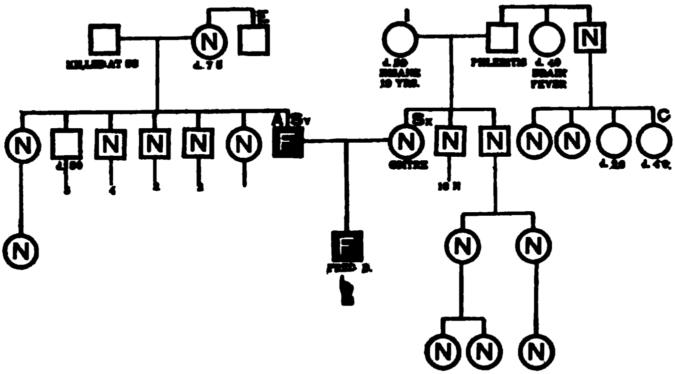

**CASE 186. FRED D.** 21 years old. Mentality 4. Has been here 10 years. American born, of American parents. Had whooping-cough at the age of six, scarlet fever in the same year, German measles at ten. The cause of the defect as assigned by the parents is " shock of the mother at finding her mother dead," or else " la grippe which the child had at four months."

Fred is a very low grade case and yet it is interesting to note what they expected of him, at the time of admission, at the age of eleven; it is recorded that "his appearance is normal, capacity normal, altho speech imperfect; uses, in talking, no articles, prepositions nor conjunctions; counts to five, knows part of the alphabet, memory variable, remembers things of a year ago but forgets things of a day ago. Attention good, can imitate well." Two years later "saws and planes very well; basketry is crude, lacks ambition; knits fairly well." Three years later "does

poorer work in English than a year ago. Doing well in basketry." Two years later, "is doing housework, is with the outside group."

At the present time he is doing very little; helping, or trying to help with the housework.

It is not perfectly clear from the family history that this is a hereditary case. Fred is the only child. The mother is normal but immoral. She has goitre, suffers from heart trouble, is very nervous. Her mother was insane. Her father had phlebitis. Fred's father is feeble-minded, alcoholic, and syphilitic. An uncle of his is epileptic, nothing else is known of the family.

The mother has two brothers, both normal, with normal children, one having normal grandchildren. The father has three brothers and two sisters, normal. His mother was a normal woman. She died at seventy-five of old age.

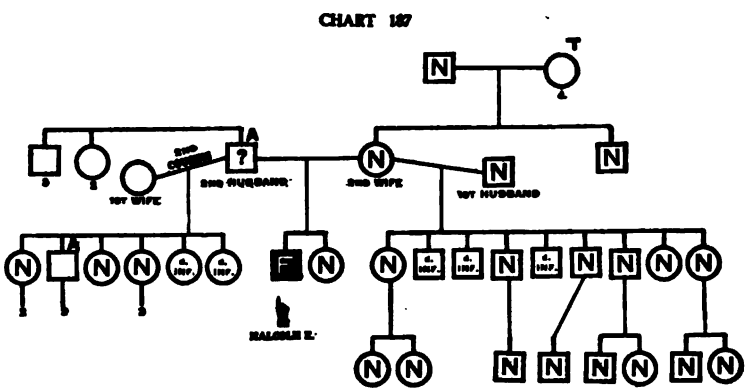


CASE 187. MALCOLM E. 24 years old. Mentality 4. Has been here 13 years. American born, of American parents. Had measles, whooping-cough at the age of two, grippe, marasmus at the age of six months.

After the usual trial in school, where he failed to accomplish anything in the three R's, he gradually settled down to become a good cottage helper, where he did very good housework. He was cheerful, happy and contented.

The chart is interesting because of the double marriages that

CASE 187, MALCOLM E., AGE 24. MENTALLY 4. (centre)
CASE 194, URY M., AGE 20. MENTALLY 3. (bottom left)

came in. Malcolm's mother belonged to a thoroughly good, respectable family; her first husband was about her equal and they had a large family of normal children and grandchildren. Her second husband was the father of Malcolm; he was very alcoholic, probably also mentally defective. Indeed he was so considered in his youth. He had been previously married and had a family of children, part of whom were normal, and the rest were alcoholic or died in infancy. Unfortunately we have been unable to learn anything about his sibs, his parents, or the grandchildren. From all that we know it would seem highly probable that the father was defective and that this is a true case of heredity.

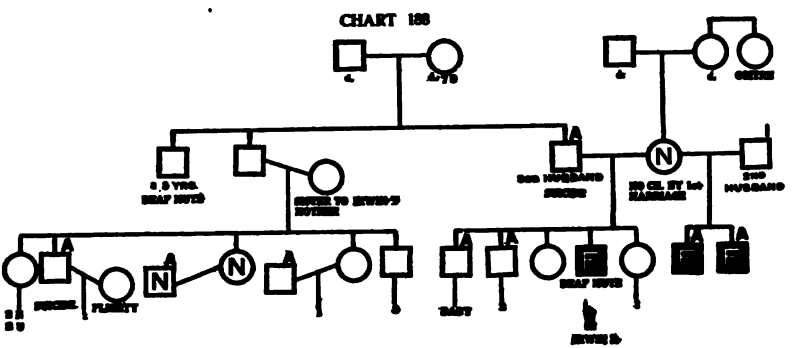


CASE 188. IRWIN I. 23 years old. Mentality 4. Has been here 9 years. American born, of German parents. Has had measles and whooping-cough. Supposed cause, " fell down a flight of stairs at the age of two."

Irwin is much under size, a boy to whom the term "dull" has seemed perfectly applicable. School work is entirely beyond him, he has to be watched that he may accomplish anything; he is cheerful, sober, quiet and obedient; very forgetful, sensitive; likes knitting but cannot make a success of it; works in the laundry; likes being with the machinery; does a little housework. He has recently developed symptoms of dementia præcox.

It has not been possible to get very much data in regard to

this family; two older brothers of Irwin are alcoholic; two half-brothers are alcoholic and feeble-minded.

Irwin's father was alcoholic and committed suicide. A maternal grand-aunt of Irwin had a goitre and died in the hospital. Irwin's father's brother was deaf and dumb. A cousin was alcoholic and hanged himself. Taking all these facts together we cannot but conclude that we have hereditary feeble-mindedness.

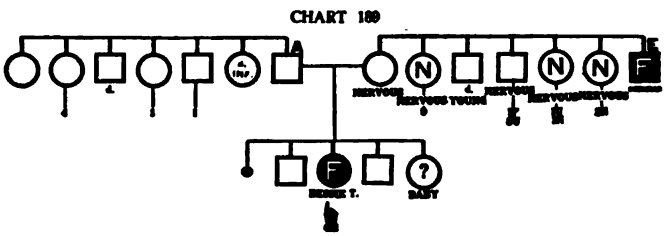


**CASE 189. BESSIE T.** 10 years old. Mentality 4. Has been here 2 years. American born, of American parents. A case of cerebro-spinal meningitis. Instruments were used at birth. Condition is also said to be congenital.

Bessie is very small for her age; is learning to walk but is making very little improvement in other lines; understands a command and can do a little errand.

This is a case of morbid heredity at least, whether of hereditary feeble-mindedness, it is difficult to say positively. The father was alcoholic and abused his wife at the time of her pregnancy; on the other hand, the family believe that it is a hereditary defect and say that there is defect in the family. There is certainly a great deal of physical trouble and nervousness and it is quite possible there is hereditary mental defect also. A maternal uncle of Bessie's is a feeble-minded epileptic, but whether the feeble-mindedness is congenital or the result of the epilepsy we do not know. Altho Bessie has had spinal meningitis, it appears that the defect was noticed before that time, hence the probability is very strong that it is an hereditary case.

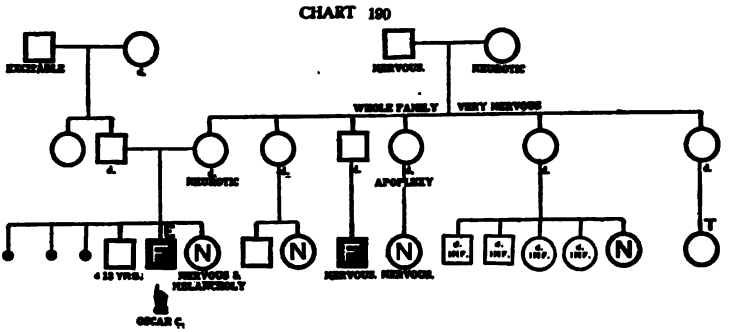


**CASE 190. OSCAR C.** 45 years old. Mentality 3. Has been here 24 years. American born, of American parents. An epileptic.

Oscar is a prematurely old man, at present of low grade. He was perhaps brighter once; how much of his earlier mentality the epilepsy has destroyed we have no record.

We have been unable to get sufficient information in regard to the family to mark very many of them as either normal or defective. A cousin was defective. He had three other cousins and a sister normal, but the sister is nervous and melancholy. The mother and sibs were all highly nervous; altogether it is probable that there is hereditary feeble-mindedness.

**CASE 191. SAMMY E.** 18 years old. Mentality 3. Has been here 7 years. American born, of American parentage. Had convulsions between the ages of three and nine months; had whooping-cough at nine months. One theory of the cause of the defect is a blood clot on the brain due to the whooping-cough.

This is rather a low grade case. Upon admission he could not talk and does not yet to any great extent, and the few words that he does say are very indistinct. After admission, he learned to dress himself and could go on simple errands, tried to say a few words; has never been able to learn anything from the school work; can dust the room and rub the floors a little, and run errands.

The heredity in this case must be considered somewhat in doubt. We have marked the father feeble-minded on the authority of a physician who knew him well. So far as we have learned, however, there are no other defectives in his family and

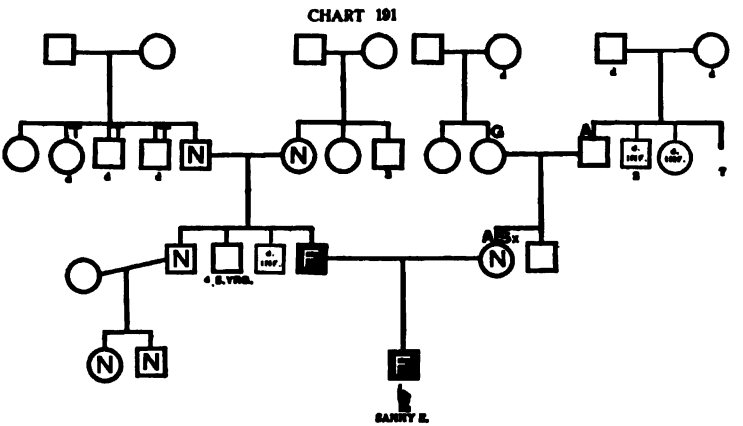


nothing of great significance to account for his condition. The family is not high grade either socially or mentally. The mother of our boy is of low type morally, sexually loose, somewhat alcoholic and said to be thieving. Very little accurate information could be obtained about this family and it must remain an uncertain one.

**CASE 192. HIRAM T.** 62 years old. Mentality 3. Has been here 8 years. Probably American born; father at least, of Scotch descent, nationality of mother unknown.

This is an interesting case of a low grade person who has lived to an advanced age. He manifests the characteristics of a child of three, plays with toys, will sweep and dust a little, will pick up trash; is rather restless but obedient, timid, somewhat obstinate; is exceptionally fond of sweets; he talks very little and indistinctly.

Not enough of the family history is known to decide with certainty whether this is a case of hereditary or acquired feeble-mindedness; the mother was insane, a younger brother was feeble-minded and died at forty-five, a still younger one was considered peculiar but his actual condition could not be determined. The sisters seem to be normal and have normal children and grandchildren.

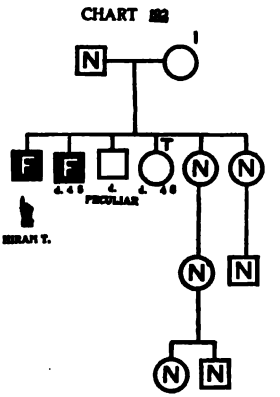

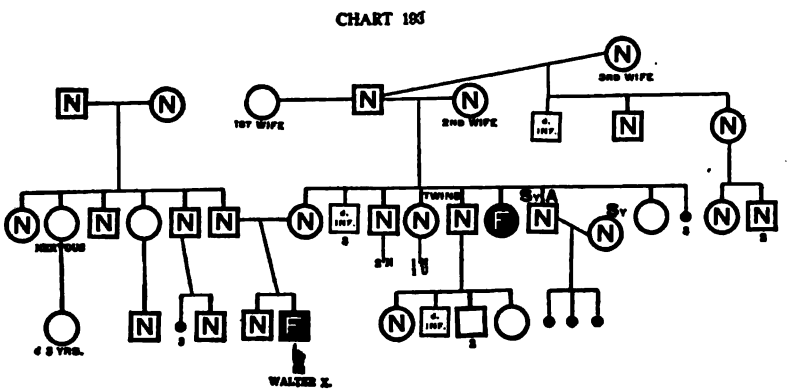

CASE 193. WALTER X. 40 years old. Mentality 3. Has been here 16 years. American born, of American parents. Had whooping-cough at three years and measles at four.

Walter is a low grade boy with no marked stigmata, does not talk distinctly, has never been able to do anything of note in school work; at one time could count to ten and spell cat; does a little work around the house such as rubbing the floor and dusting; or he can work out of doors. He is very affectionate, quiet, obedient, rather excitable. He was a strong babe and nursed by his mother. The defect was not noticed until he was

ten years of age, which would seem to indicate that at one time he may have been brighter than at present.

It was suggested that his defect may have been caused by fright, the father fell down stairs; presumably this may have frightened the mother during pregnancy.

It is not sure that this is a case of hereditary defect altho an aunt of our boy was feeble-minded. The father and mother are both normal, the former has kidney trouble and the latter chronic liver trouble. There is a good deal of physical defect thruout the family, which would seem to indicate a low physical tone. Walter's mother was the fourth of fifteen conceptions, three resulting in miscarriages. There seems to be a hereditary tendency to obesity. A sister of the mother weighed 340 pounds, the mother herself weighed 220 and their mother weighed 360 pounds.

**CASE 194. URY M.** 20 years old. Mentality 3. Has been here 7 years. American born, of Irish parents. Had measles at two years, whooping-cough at five, pneumonia at six.

Ury is very low grade. He has never been known to say more than one or two words. He eats a great deal; sleeps naturally; can rub floors a little and can pick up trash; needs close supervision, has very bad habits, is cheerful, very excitable and destructive. His toes are webbed.

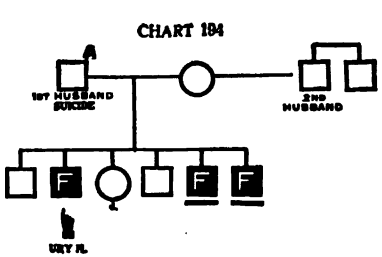


He is second in a family of six. The first is supposed to be in the Navy. The next younger girl died of spinal meningitis at eleven. The next one is living, but unknown. The last two are feeble-minded and in a Home. The father was alcoholic and committed suicide by drowning. The mother, as well as the father, is undetermined as to mental condition. They have all been in the almshouse at least six different times.

CHART 195

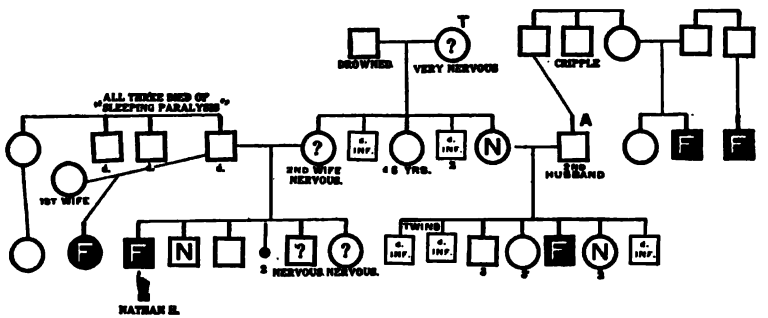


**CASE 195. NATHAN H.** 37 years old. Mentality 2. Has been here 20 years. American born, of American parents. Had usual children's diseases, whooping-cough, scarlet fever at two and a half, ulcerated stomach. Assigned cause of condition, " mother thrown from carriage."

Nathan is a profound and unimprovable idiot. Could not speak, had bad convulsions when young. He was the first of seven conceptions; the mother had two miscarriages, one normal, and three undetermined. The mother was sixteen and the father forty when married; there is some probability that the father was feeble-minded since he had a feeble-minded daughter by another wife. He and two brothers suffered from "sleeping paralysis." A sister of the mother had, by a second husband, at least one feeble-minded child, while only two of her large family are really normal.

**CASE 196. FRED N.** 22 years old. Mentality 2. Has been here 6 years. American born, of American parents. Has had measles and whooping-cough. The assigned cause of his condition is that he was very severely frightened at the age of three months by being held against a piece of fur.

He is somewhat small of stature but about the average weight; talks very little and only in monosyllables; does not do very much, and only the simplest sort of work; can partially dress himself; at present works around the boiler house; has very

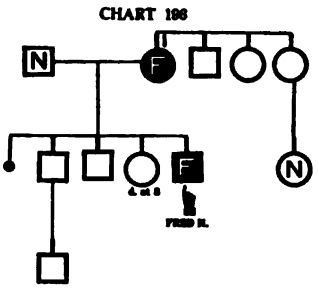


bad moral habits, has long since reached his limit of development. Very little can be learned of his family as will be seen from the chart. His mother is feeble-minded; but his father, altho evidently normal in intelligence, is an unhappy disgruntled person who seems to have a grudge against the world in general, and his relatives in particular, both his own and his wife's.

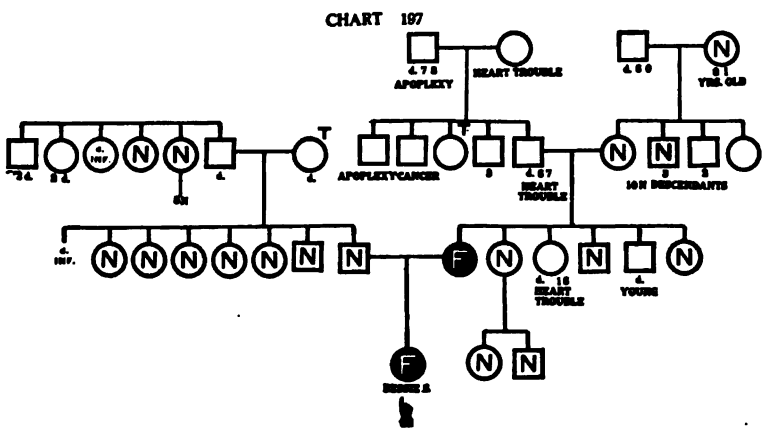


**CASE 197. BESSIE S.** 13 years old. Mentality 2. Has been here 5 years. American born, of American parents. Had epilepsy at one year; is paralyzed. Supposed cause, " blood clot on the brain from falling down stairs."

Bessie is entirely untrainable and of the lowest grade; does not talk; does not sleep well. She cries a great deal, does no work, had convulsions from age of six months until three years. She is an only child.

The father and all his family, that can be found, are normal. Bessie's mother is a high grade feeble-minded woman. There

is no other known defect in her family, altho of her father's family nothing is known. He died of heart trouble at the age of 57. A brother had apoplexy, another had cancer, another brother and a sister, tuberculosis. Their father died at 73 of apoplexy, the mother of heart trouble.

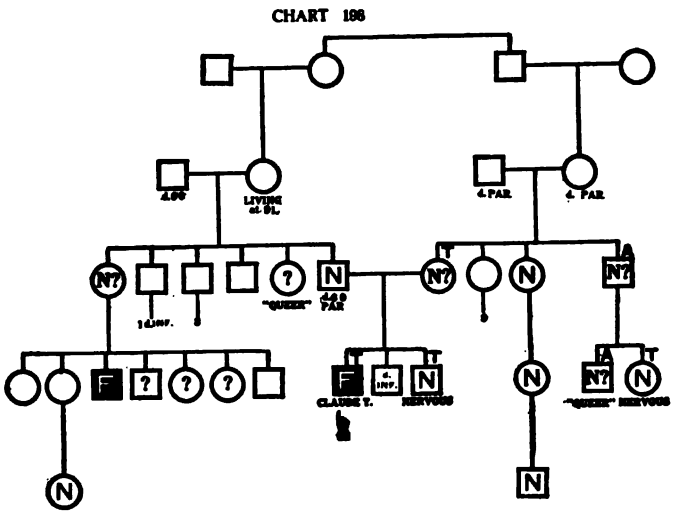


**CASE 198. CLAUDE T.** 25 years old. Mentality 3. Has been here 12 years. American born, of American parents. Has had whooping-cough, cerebro-spinal meningitis at the age of one and a half years, has had pneumonia and hip disease. Supposed cause, " meningitis."

Claude is a low grade case but with marked peculiarities. He is very excitable, rather stubborn, inclined to be disobedient, altho he will obey those whom he knows he must obey; has tuberculosis of the hip which has always given him a good deal of trouble. He has an excellent memory and this enables him to make a certain show of learning within his capacity. For instance he will sometimes count to ten, can copy writing, knows all of the letters of the alphabet but does not always say them. He likes school and knitting; has made great chains

by twisting wire together, this requiring considerable strength and manipulation.

When he went to the hospital and saw a tooth extracted he came home and covered sheets of paper with diagrams like the following:

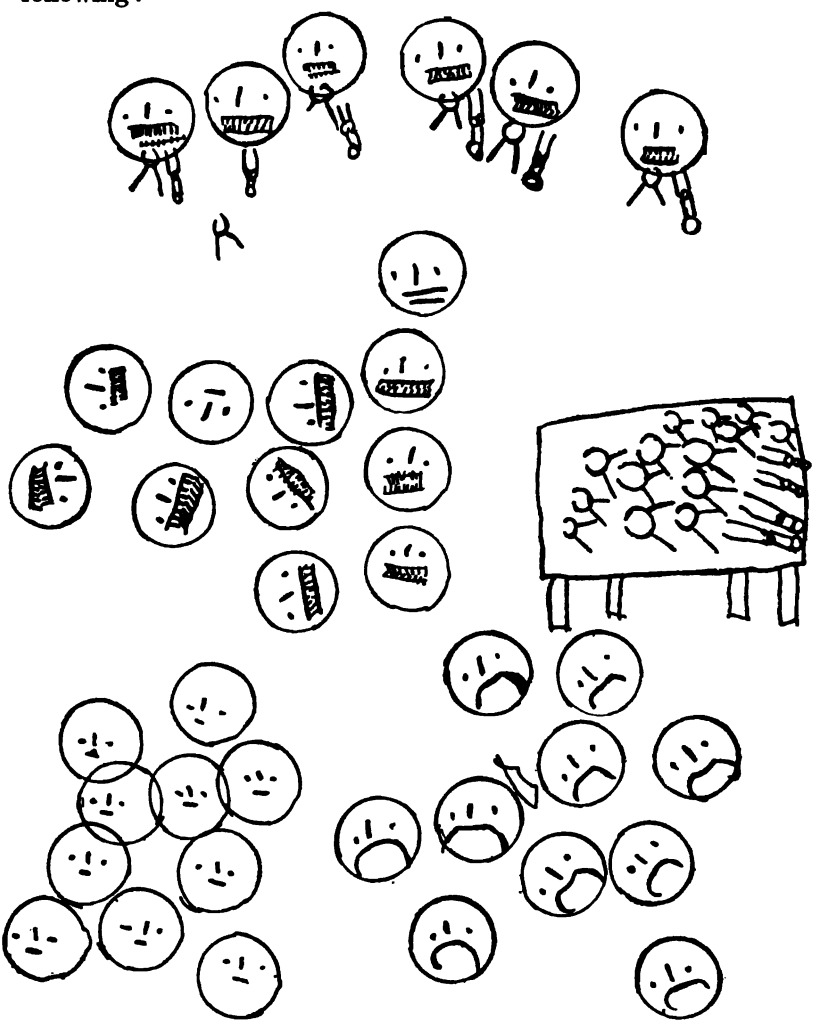

One sees the table with the dentist's forceps. The top row of figures represents the open mouths with the forceps and the clothes pin that the dentist uses to prevent the children from injuring their teeth by biting on the steel forceps.

After a while he left out the forceps and made hundreds of faces, a little later these were left unelaborated with only dots for nose and mouth; later he left out the dots and covered his paper with circles which he drew with the help of some round object. He will do this kind of thing by the hour, now in one line, now in another. He is of no help or use to any one and probably would not be even if he were not lame.

This is rather a difficult family to understand; there is not enough evidence to put it down as certainly a case of hereditary defect, especially in view of the fact that we have an ample cause in spinal meningitis. Nevertheless there are a great many things that make us feel that there may have been defect in the family. At least there is a good deal of physical trouble and a cousin of Claude's was also feeble-minded with defective speech and defective eye-sight. A number of others are marked questionable, which means that they were borderline cases and are only considered normal with reservation.

## NEUROPATHIC ANCESTRY

The following 37 cases, Nos. 199 — 235, compose the group of cases of Neuropathic Ancestry. Here are grouped the families in which there are not enough defectives to indicate hereditary feeble-mindedness, but there are more or less neuropathic conditions among the ancestry — such as paralysis, apoplexy, neurasthenia, epilepsy, etc.

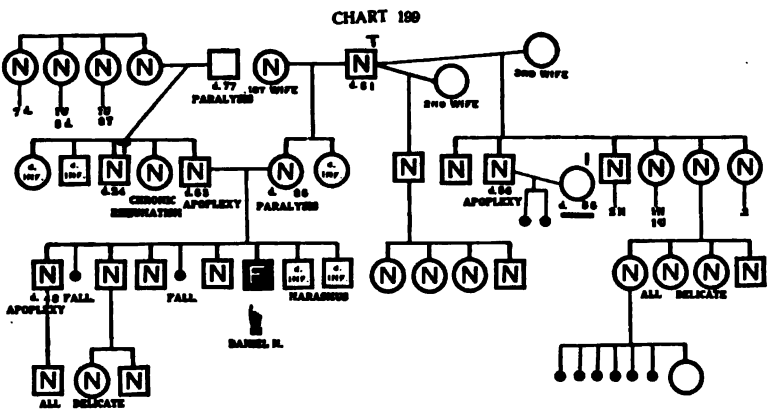


**CASE 199. DANIEL N.** 39 years old. Mentality 11. Has been here 9 years. American born, of American parents. Assigned cause, "the presence of a feeble-minded servant in the family before he was born."

Daniel was thirty years old before he entered the School; he had been well trained and was a cheerful, good-tempered, sober, affectionate, truthful, honest boy. He is inclined to be a little morose; is quiet and obedient, rather forgetful; sometimes seems rather lazy, but on the whole is a good worker under direction, somewhat inclined to be discontented. Had learned rather more school work than most boys of his type; can read and write quite a little. The following letter, which is spelled correctly, and is fairly well punctuated and paragraphed, nevertheless shows the childish way of looking at things; it was written in a bold, heavy boyish hand, perfectly characteristic of his mental age:

March 7, 1909.

Miss M:

Now, for goodness sake, let me stay away from that party you talked about giving to the evening class boys, because I am so dead tired out nights from my day's work that I *positively* can not take any interest in it; but, if you insist for me to come to it, for pity sake let me sit on my chair all evening from the beginning to the of the party as I am too tired out to take any part in any games that may be played that night. You told me how I dressed up last year — I did it far more for respect for Miss M (and Miss B if I went to her then), than I did for you — you said I had a nice looking pair of shoes on — they are my best ones, and I wear them to evening class nights, because they are lighter weight than my working ones, and as for my suit of clothes, it is come to evening class with those clothes on, or in my overhalls and jumper on — the ones I work with. Sometimes Mr. M gives 2nd period evening class boys whistle signal instead of commands, and I would never know what was next if some person did not give the sign on the sly.

So, whatever you do, for the land's sake, let me stay home from the evening class boys' party and I have told you why I want to stay away from it.

Daniel N.

P.S. — I forgot to tell you before I signed my name to this note to you that I have party enough through the day and all I want of it too.

Daniel N.

Daniel comes of a good family, intelligent and respected; there is no accepted cause for his condition. Both his father and mother died of apoplexy or paralysis, losing their minds towards the last. Moreover the father's father also died of paralysis. It is interesting to note that while there are four normal boys they were all born before Daniel and after him there were two who died in infancy of marasmus.

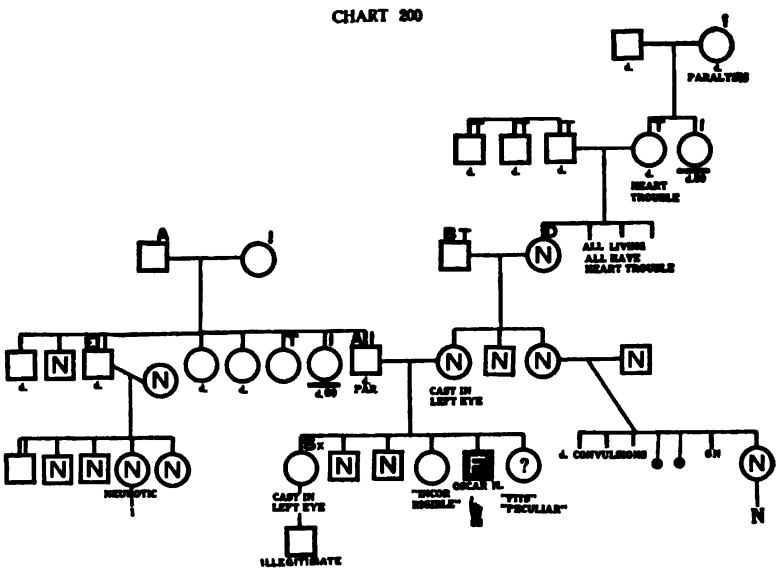


**CASE 200. OSCAR M.** 16 years old. Mentality 10. Has been here 7 years. American born, of American parents. Has had measles and whooping-cough.

Oscar is an ordinary mischievous looking boy. He came here from a foster home at the age of nine; had been in public school two years and had had instruction in the home. As usual with children of his grade he started off well with his first work here; was in kindergarten; read well; did not spell as well; could add combinations to ten. He began music, played the scale on the alto horn. Gradually, however, he reached his limit in the English work and made more progress in woodwork and basketry. He seems to be a very moody boy, is generally cheerful and happy but sometimes the opposite; is cranky and restless; is quick-tempered; seemed to have a great deal of disturbance and almost apparitions at the beginning of puberty. He is at present, however, a good Institution helper, but is considered rather lazy and it is said he would rather talk than work.

The family history shows no other case of feeble-mindedness, but a good deal of insanity, tuberculosis and some eye trouble, also one case of epilepsy in a paternal uncle. The insanity seems to be more or less hereditary on both sides of the family and some sort of eye trouble seems hereditary through the mother's side even extending to a sister of Oscar's. It certainly is a case of Neuropathic Ancestry, if nothing else.

**CASE 201. BYRON C.** 18 years old. Mentality 9. Has been here 9 years. American born, father American, mother English. Had convulsions soon after birth; has had chorea, measles and whooping-cough.

Byron was born blind but an operation has given him about one-fourth normal sight. He is cheerful, active, affectionate, willing and tries, good-tempered. His defective sight has undoubtedly interfered with his school work and had he had normal vision he would have done as much as any of our children who have a mentality of nine.

CHART 201

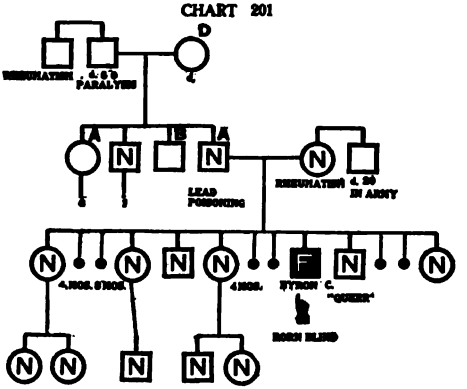


He learns new occupations quickly, and is a very good Institution helper.

The case is an interesting one from the standpoint of causation. We find no other case of feeble-mindedness in the family altho there are several persons whose mentality is undetermined.

The father was a laborer in the Pottery Works and suffered from lead poisoning to such an extent that he had to give up the work. This was shortly before Byron was born. Two other children born later, however, were normal altho the next younger is reported as being "queer." The mother, also, had

worked in the Pottery Works since she was nine years old. She suffered from rheumatism during the whole time of her pregnancy with Byron, and most of the time had to be fed. Byron was a blue baby and whether his condition was due to lead poisoning it is probably impossible to tell. If so, it is quite as likely to have come from the mother as from the father. Therefore we do not have to consider a defect in the father's germ cells which has been transmitted, since the poison may have influenced the mother's powers of nutrition. The condition would thus be congenital but not necessarily hereditary.

CHART 202

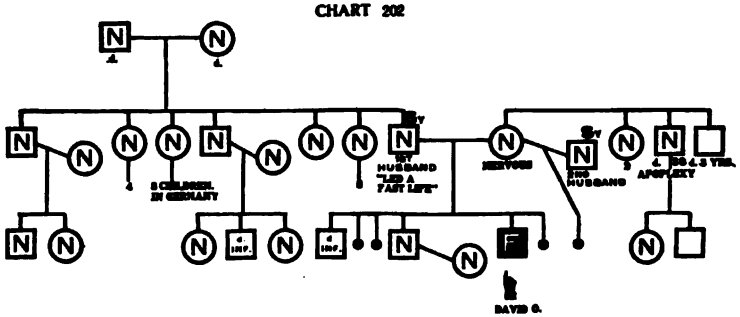

**CASE 202. DAVID O.** 30 years old. Mentality 8. Has been here 14 years. American born; father German, mother American. Had measles at two years, pneumonia at five; has had whooping-cough, scarlet fever, diphtheria and had brain fever at fifteen.

David came here when he was sixteen years old; he was small, as he is yet, had rather a large head, could partly dress himself, had defective speech, was club-footed, heedless of danger; had been in public school two months; could count to fifty but could not add.

He has learned to read, and writes very well; adds simple numbers; is very fond of writing and is always happy when he has paper and a pencil. He has never gotten beyond adding numbers to ten in his number work; cannot do much in woodwork, is a cottage errand boy and is very good but

slow; does general housework; is inclined to be cranky; is, however, willing, and generally tries to do his best. He is quite excitable, fond of other children and helps in the care of them; has a sense of order and cleanliness; needs careful supervision.

The father of David is a normal man, but syphilitic. This has undoubtedly shown itself in the deaths in infancy and the miscarriages; one son, however, is normal. Whether we could say that syphilis is the cause of David's mental defect is doubtful. David's mother is a very nervous woman. Unfortunately, we have been unable to learn anything about her parents. She has two sisters and a brother who are normal and this much looks as tho it were mentally a normal family, though probably neuropathic.

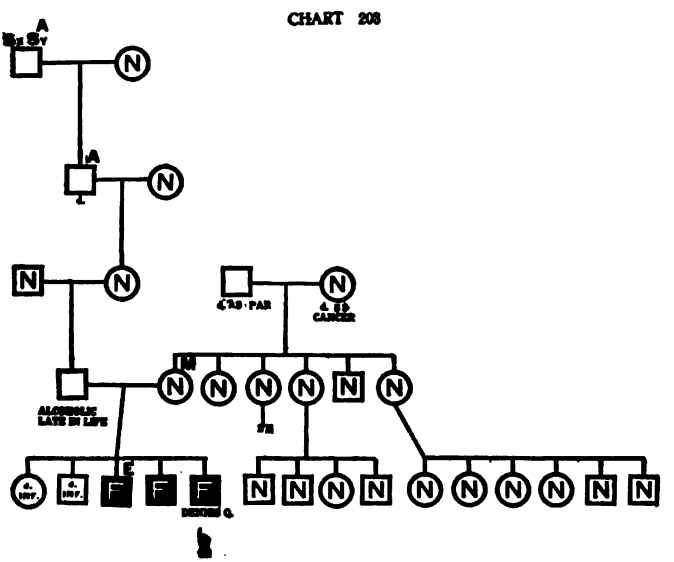


**CASE 203. DENNIS Q.** 23 years old. Mentality 8. Has been here 7 years. American born, of American parents. Condition said to be congenital. Child had measles at one year, whooping-cough at five, diphtheria at six, scarlet fever at nine.

Dennis is a rather good-looking boy, somewhat small in stature, but not abnormally so. Is a fair worker altho somewhat moody, is excitable, sensitive and quick-tempered. He can milk, and he helps the gardener; helps about the barn.

A glance at the chart seems to indicate that this is not a case of hereditary feeble-mindedness. If the cause assigned by the physicians as stated below, is not accepted, at least we have nothing else to give.

Dennis is the last of five children. Two died in infancy, the rest were feeble-minded. There is no apparent cause for this except that given by the experts in this case (including not only the family physician, but the experts in hospitals), which is, that it is a case of syphilitic poison latent thru three generations and becoming active in the fourth. This is a particularly tragic story. From great respectability, position, intelligence, the family has fallen into poverty and distress. The children, Dennis in particular, seem to have been born intelligent, but to have deteriorated. The physician assures us that there is no trace of syphilis until we get back to the early generations. The father is recorded now as being alcoholic. But this did not come on until after the children were born, so that cannot be considered as a cause.

**CASE 204. WALTER T.** 30 years old. Mentality 8. Has been here 19 years. American born; father German, mother American. Instrumental delivery. Had convulsions from one to three years; has had measles, whooping-cough, scarlet fever, and cerebro-spinal meningitis at the age of six.

When he came, he was a pyromaniac and had started several fires. This impulse was turned to account by Superintendent Johnstone, who set him to work in the boiler house. Here he finds vent for his mania in a harmless and useful way. He enjoys the fire; seems to personify it. Shoveling in coal is to him feeding his beloved. He sometimes gives it part of his own dinner. He has never set any fires since he came here.

CASE 203, DENNIS Q., AGE 23. MENTALLY 8. (top)
CASE 204, WALTER T., AGE 30. MENTALLY 8. (centre)

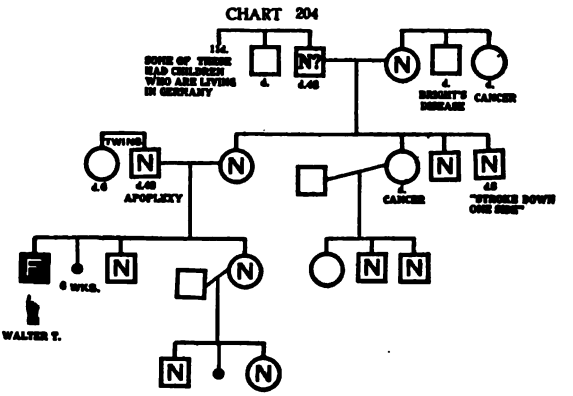


Walter is a pleasant, good-natured, agreeable fellow, a good worker about the Institution.

The family history would indicate that the Neuropathic Ancestry accounts for the condition. The meningitis is ruled out because the defect existed prior to the attack.

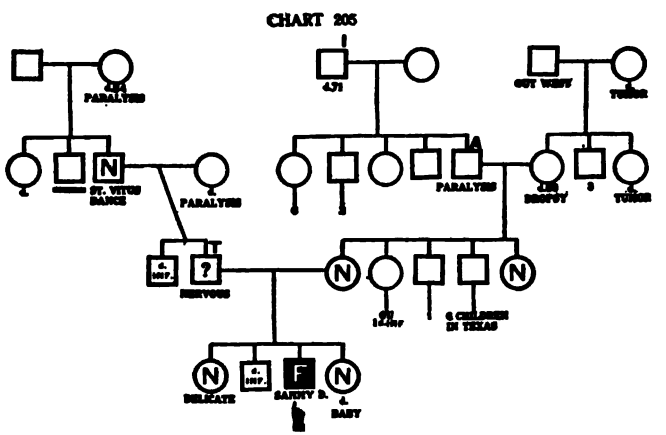


**CASE 205. SAMMY D.** 13 years old. Mentality 7. Has been here 5 years. American born, of American parents. Had whooping-cough at five; measles at six; has had paralysis. Condition is said to be congenital.

Sammy came here at the age of eight; had been in public school two years; knew his letters and could count to twelve; could do an errand. Two years later he could count to twelve

and could write figures to nine; could read about twenty-five words and easy sentences; could write his own name. Learned a little in basketry, but has probably reached his limit in the three R's; will doubtless improve in industrial work.

The family chart does not show any other feeble-mindedness, but a good deal of disease which would warrant us in calling this case one of Neuropathic Ancestry; for example, the father was very nervous and stuttered; his father had Saint Vitus' dance. Sammy's grandmother on the father's side died of paralysis; the maternal grandfather died of Bright's disease and had had a stroke of paralysis; his father was insane.

**CASE 206. PAUL D.** 19 years old. Mentality 7. Has been here 7 years. American born, of American parents. Has had measles and whooping-cough. Supposed cause, "heredity and abuse."

Paul is rather an agreeable high grade imbecile, cheerful, usually obedient, but somewhat inclined to be stubborn; has had the usual school experience which characterizes children of this type. He made some show of reading and writing, at first, but soon fell out; did a little more with the simple manual arts, such as basketry, and then after a time finally ended up by doing housework or the roughest kind of outside work. Paul, besides doing housework, works with the mason. He is a very strong, fairly healthy boy and quite a fair worker in his line.

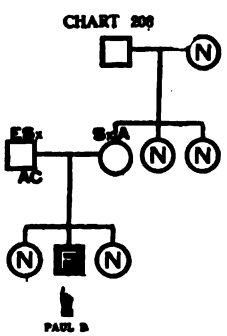


If there is any hereditary defect it has not shown as feeble-mindedness but rather in what Tredgold calls "morbid heredity," but which we have called neuropathic ancestry.

The father himself is a puzzling case until we remember that he is an epileptic, then we can probably account for what we find. We can hardly doubt that he is a normal man so far as intelli-

gence is concerned, when we know that he worked as a lineman, was an expert tree trimmer, had served as a dog-catcher and was considered very normal, but on the other hand, he was shiftless and could never hold a place long, even tho he was an expert workman. He has also served a term in State's Prison. He was alcoholic and could not endure success, quarreled with his wife and she had him arrested for assault and battery.

As Healey has shown, these vagaries are often produced by epilepsy in an otherwise normal man. This epilepsy was certainly not transmitted to any of his children and it is unfortunate that we cannot trace his ancestors farther back to discover if possible the origin of his peculiarity. We have nothing except the statement in the admission blank that "an uncle and two cousins are insane."

CHART 207

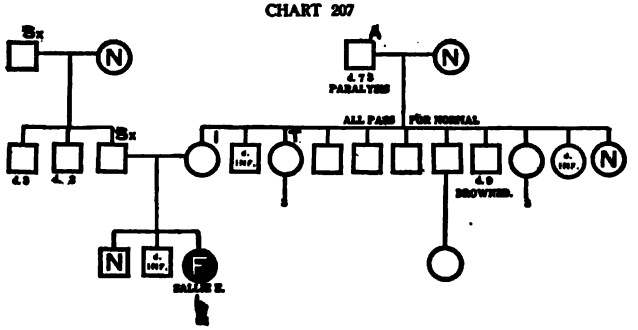


**CASE 207. SALLIE E.** 27 years old. Mentality 7. Has been here 14 years. American born, of unknown parentage.

It has been impossible to obtain any history of Sallie's life previous to her entrance into the Training School. She is a quiet, sweet-faced girl with a demure and unobtrusive manner and a habitual reserve which would make her pass for normal until one had some experience with her.

She came to the school when she was thirteen years old, was nervous in movement, could not read, was fond of music; could do a little housework, was noisy and indolent.

She was placed in the kindergarten and began to improve; this did not last long, however, and she seemed to lose interest in her work, was disobedient, willful, laughed without cause, seemed unable to control herself; it was recorded that she showed signs of insanity. Nine months later, she is reported as greatly improved, was learning dressmaking, always happy and cheerful. In the course of a year, she learned to write a little and read a few sentences; worked slowly but earnestly in woodwork, improved in sewing, but could not learn to use the machine. At one time she was recorded as a most satisfactory girl in her cottage in doing housework, obedient and industrious. About three years ago, however, she began to fail and since then can do only a little dusting.

One can perhaps see the explanation of all this in the fact that the mother was insane. She belonged to a rather low grade family and was always weak, and it may be that the insanity began, at least, as feeble-mindedness. The father was an immoral man as was his father before him, but they are supposed to have been intelligent. There is not enough here to warrant our calling it a hereditary case tho it is surely a neuropathic family.

**CASE 208. BESSIE G.** 45 years old. Mentality 7. Has been here 22 years. American born, of German parents. Has had measles; scarlet fever at the age of ten. Supposed cause of condition, "scarlet fever." She was a strong baby nursed by her mother. Had first convulsions when ten years old. Her mother had convulsions after the third month of pregnancy.

Bessie came here at the age of twenty-four, having previously been in the Industrial Home for Girls and later in an Institution for the Feeble-minded. She was too old to do much in school and became a cottage helper. She is very willing and good-natured; has very poor eye-sight and congenital cataracts.

This is another family in which it is not possible to draw any conclusion as to the hereditary character of the condition. The

CASE 207, SALLIE E., AGE 27. MENTALLY 7.
CASE 208, BESSIE G., AGE 45. MENTALLY 7.
CASE 217, HUGH I., AGE 25. MENTALLY 5.

mother had epilepsy, and her mother died of paralysis; there seems to be a morbid condition in the family but beyond that nothing is to be said. It would seem that there was some taint of hereditary cataracts, as a nephew of Bessie has the same trouble.

CHART 208

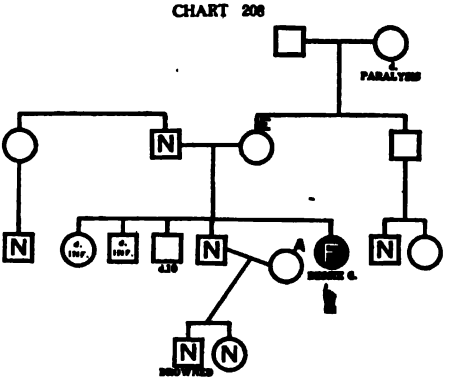


The scarlet fever does not seem to be the cause since it occurred when Bessie was ten, while the arrest of development came at seven. The neuropathic ancestry is more probable.

**CASE 209. HENRY Q.** 24 years old. Mentality 7. Has been here 9 years. American born, of American parents. Has had spasms and infantile paralysis; had pneumonia at the age of six.

Henry is a high grade imbecile with paralysis of the right arm. He has never been trained in ordinary school work; has improved much since he came here, thru physical training; can use the hoe in garden work, is a good bowler; is considered cranky, slow but good-tempered and willing, cheerful and obedient; makes beds and runs errands; works in the laundry and is happy.

CHART 209

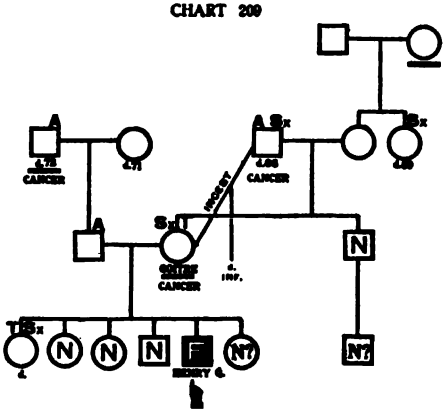


There is a probability that this is a case of hereditary feeble-mindedness, and yet it has been

impossible to verify this; partly because the alcoholism of the father and grandfather renders their mental condition uncertain. The family is generally of low grade with a lack of morality. It seems likely that the oldest and the youngest sisters of Henry are also mentally defective. The three other children are so far away, it has been difficult to get any accurate information in regard to them. Several of the family have been supported by public charities and altogether they are undesirable citizens.

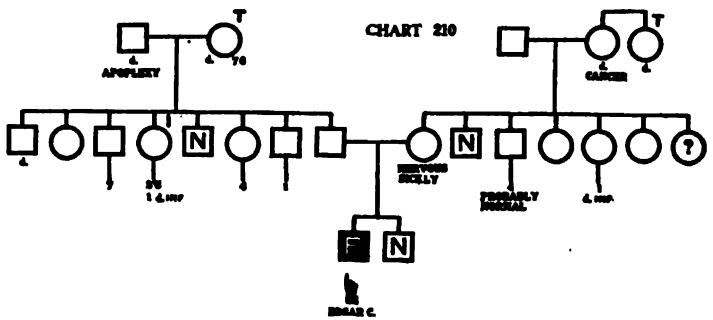


**CASE 210. EDGAR C.** 13 years old. Mentality 6. Had been here 7 years. Had defective speech, commenced to walk at four years of age; had weak knees; commenced to talk at four years.

Edgar never developed very far, had a great deal of sickness, and finally died about two years ago.

No sufficiently accurate data have been obtainable in this case to give us any certainty as to cause. A younger brother is distinctly normal, a paternal aunt was insane.

It is probably a neuropathic family.

**CASE 211. XAVIER D.** 11 years old. Mentality 6. Has been here 6 years. American born, of American parentage. Birth was very difficult, labor lasted 12 hours, instruments and anæsthetics were used. Child weighed eight pounds. At four years of age he had whooping-cough; at three years, chicken-pox. His defect was noticed about the age of five.

He is a school child, but does only kindergarten work. Some of this he can do pretty well; is rather small for his age and

does not speak plainly. He has made practically no improvement in the last three or four years, cannot get beyond the kindergarten work.

In the cottage he is helpful; likes to take care of other children less bright than he is. Is an active, cheerful little fellow, restless, and very affectionate, mischievous, sometimes destructive; not

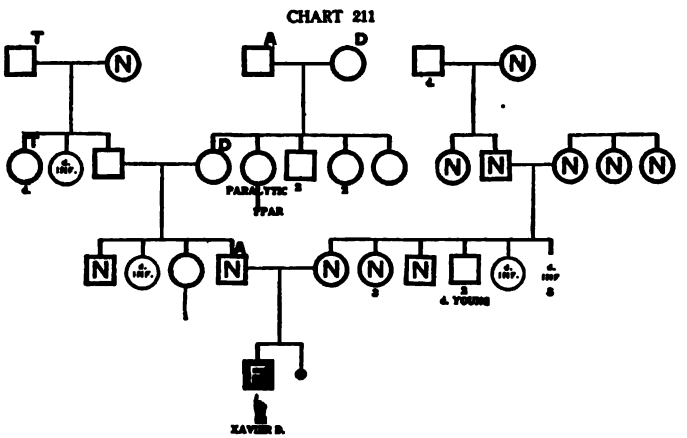


always obedient. He apparently has reached his limit, altho he may improve slightly.

There is no evidence that this is a case of hereditary feeble-mindedness.

The mother of Xavier is entirely normal and seems to be of a good family. On the father's side, there is deafness in two generations, tuberculosis, alcoholism and paralysis.

**CASE 212. FORD D.** 16 years old. Mentality 6. Has been here 8 years. American born, of American parents. Had pneumonia at six months, whooping-cough at five years. Condition is said to be congenital.

Ford is a nice-looking boy, really of more intelligence than he makes use of. Altho he shows a grade of six he has never been able to be trained to do anything of any value. He is very little help about the cottage.

He was born at seven and a half month's term, but was a strong baby. He has remarkable powers of imitation and it is probably thru this that he has acquired most of what he has. He is very affectionate and usually cheerful; does not talk much;

CHART 212

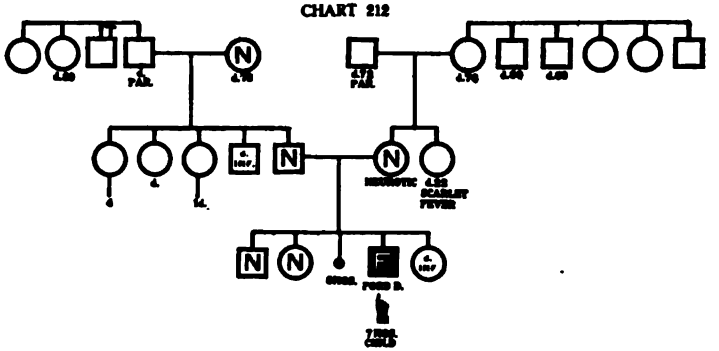

all things considered he is a very difficult child to understand. It is equally difficult to account for his condition. The family history shows nothing that can be assigned as a reasonable cause except the neuropathic condition.

CHART 213

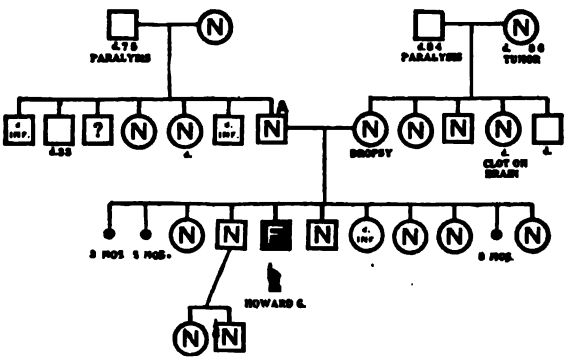

**CASE 213. HOWARD G.** 25 years old. Mentality 6. Has been here 13 years. American born, of American parents. Instruments used at birth. Had measles at the age of four.

Howard was twelve years old when he came to the Institution; had been in public school two years with no results; liked to make things; did not accomplish much under training. It is recorded that he could learn words and sentences and then, if left for a day or two, forgot them entirely. He is a good worker about the cottage. He is pleasant and agreeable; plays the cornet a little.

There is nothing in the family history to indicate hereditary feeble-mindedness. The mother had dropsy at the time of the child's birth, but she had four normal children later, and had two earlier, also two miscarriages. The father was alcoholic. Our boy was born under difficulties, instruments were used and it is said that liquid oozed from the child's head for some little time after it was born. There is a small scar on the back of the head.

This is a difficult case to account for. The instrumental delivery might be considered, but neither the family nor the physician regarded it as the cause. We have finally classified it as a case of neuropathic ancestry.

CHART 214

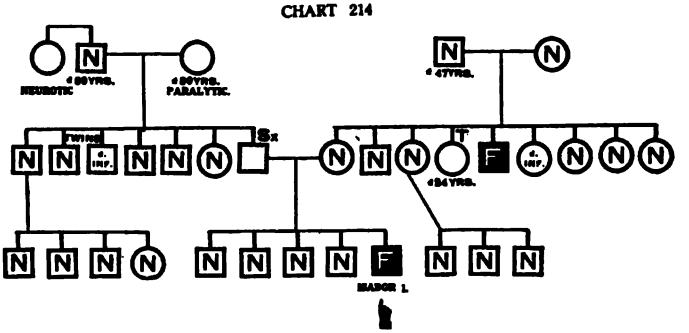


**CASE 214. ISADORE I.** 19 years old. Mentality about 7. Has been here 7 years. American born, of American parents. Had whooping-cough at the age of two and measles at four; has had abscesses of the ears.

Isadore is another one of those cases that impresses the observer, the teacher or employer, as one who ought to make good. He looks fairly intelligent, is normal physically and always gives

one the idea that "he could if he would"; as a matter of fact he clearly cannot. He has never done anything worth noting in school, altho much effort has been bestowed upon him, nor has he done any more in the manual training. The coarser kind of industrial work, however, he can do fairly well. He likes gardening, is fairly trustworthy when he is quite sure of what he is to do. He is neat and careful with his clothes; lacks energy or interest in things; will spend a long time doing nothing. He is silent and attentive, very forgetful, very slow, not truthful, generally obedient.

The family chart is difficult of interpretation. Older brothers of Isadore are normal. The mother and all her family are normal with the exception of one brother who is "not bright." The father is immoral, somewhat addicted to alcohol but not to excess. He is brutal and deserted his wife. There is a possibility that the defect is in the blood but lies dormant and this being a good family socially they have generally married people who were free from any taint and consequently it has not appeared.

The immorality of the father may have contributed something to bring out the defect in this boy. But this does not seem, in the present state of our knowledge, like a very probable explanation. Some would accept the assigned cause of *otitis media* as adequate; but with the other conditions as we find them it seems more than doubtful if this is a logical conclusion.

The family is clearly neuropathic.

CASE 215. WILFRED T. 17 years old. Mentality 6. Has been here 4 years. Born in Germany, of German parents. Had spasms at two years, measles at eight years, has had spinal meningitis. Supposed cause, "weakened condition of the mother and the insanity of the father."

Wilfred came here when he was thirteen years old; he understood a command and was obedient; could count to ten; knew color and form; could not write but could draw some; after admission seemed to improve a little at first, but that has not con-

tinued. Did a little in basketry for a while; learned to write from copy; is now errand boy and does very well.

The family chart shows clearly the effect of the syphilis of the father causing early deaths and miscarriages. One older sister is considered normal, altho even this is doubtful.

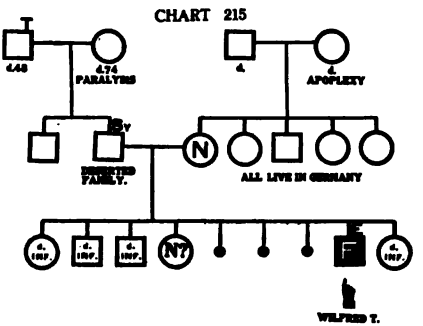


Wilfred has had spinal meningitis but this did not occur until he was ten years old. He had epileptic spasms every twenty or twenty-two days and they lasted for three days. The whole attack lasted for two years.

The paternal grandmother died of softening of the brain; was hysterical and paralyzed for two years before death; the maternal grandmother also died of a stroke of apoplexy, and we may safely call this a case of neuropathic ancestry.

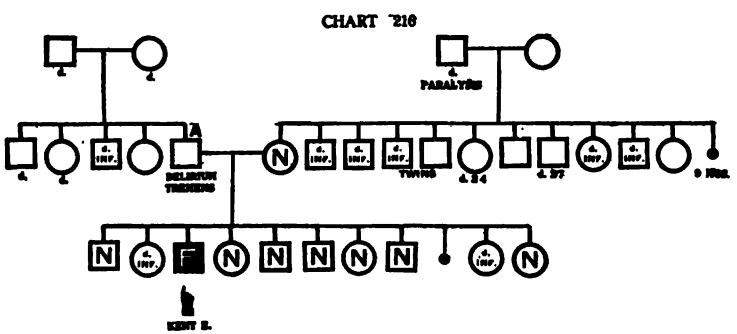


**CASE 216. KENT E.** 18 years old. Mentality 5. Has been here 4 years. American born, of American parents. Had measles at the age of one year, and whooping-cough at the age of ten. Condition supposed to be due to measles.

Kent is a good-natured, happy boy, with a cast in his eye; has shown very little improvement, could not be led to do any-

thing in school work or in manual training; has become a good errand boy, will help clean and do coarse work of that kind.

We have not found any feeble-mindedness in his family, but more or less of physical disturbances.

In the mother's family, several died young. The father was alcoholic and subject to delirium tremens. Unfortunately we know nothing of the father's parents.

Kent is also said to have been struck by a sledge at the age of five and a half, and kicked by a horse at eight years, at which time three stitches had to be taken in his temple.

**CASE 217. HUGH I.** 25 years old. Mentality 5. Has been here 18 years. He did not walk until three years old; began to talk a little at four.

Apparently he became deaf about this time and has never learned to do very much; speaks a few words when angry: has learned to count to twelve and write one or two sentences from memory; is quite useful in housework; can sew and weave; is cheerful, active, willing, truthful, good-tempered.

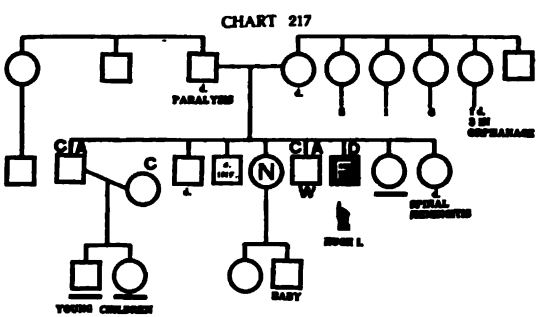


Hugh was a sickly babe and there was considerable sickness in his family, but nothing that we can point to as surely feeble-mindedness; the mother died of abscess of the stomach, the father of paralysis affecting his heart.

This seems to be a low grade family and perhaps Hugh is a case of neuropathic ancestry.

**CASE 218. WILLIE T.** 18 years old. Mentality 5. Has been here 3 years. American born; father Porto Rican, mother American. Had measles at 8 years; has had chorea. Condition is said to be congenital.

Willie is much under size, he has a very peculiarly shaped face; has defective speech; has facial tics. Altho his mentality would indicate that he ought to make some progress, it seems that he does not. He can dress and undress himself; obeys a

CHART 218

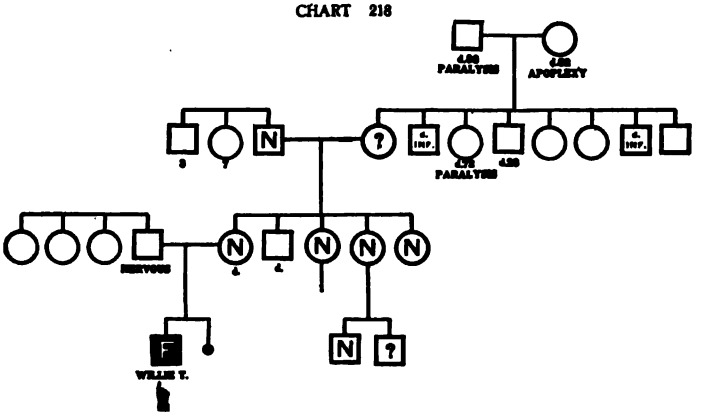


command, can print letters and can count a little; can do an errand; is fond of music; altogether not very trainable nor promising.

The family chart shows no mental defectives among the ancestors of Willie. The family physician asserts that Willie was injured *in utero* when the mother was six months pregnant; she strained herself in trying to rescue someone from falling.

The paralysis and nervousness, however, would suggest a neuropathic family.

**CASE 219. FAY B.** 17 years old. Mentality 3. Has been here 7 years. American born, of Italian parents. Assigned cause is "syphilis." Child had measles at the age of three, whooping-cough at five; exanthemata at six, causing sore eyes and loss of equilibrium; has had catarrhal conjunctivitis.

This is a case of Friedreich's ataxia; child was born healthy and strong, grew normally until seven years of age. Went to school and learned to read; at seven began gradually to lose the

ability to walk; she progressively lost her power to walk or stand, to use her legs, to hold herself up in a chair or to feed herself, and gradually lost her mind. Since coming to The Training School, Fay has been helpless practically all the time; she cannot feed herself, sits in a wheel chair or lies in bed. Is fond of music, is very small and thin but has a pleasant, pretty face; has continued to deteriorate mentally. There seems to be no mental defect in the family altho we have not been able to get very far because they are Italians and not able to speak English and there are not many of them in this country. A younger sister of Fay's has the same difficulty while a still younger brother and sister are possibly showing symptoms of the same type of attack.

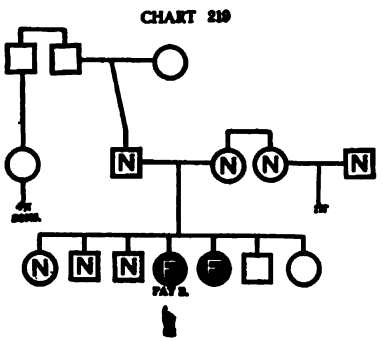


Friedreich's ataxia is a family disease, hence we have classed this as neuropathic ancestry.

It is a question in the mind of the writer whether a case of this kind should be considered feeble-minded in the usual sense of that term.

**CASE 220. NORA L.** 22 years old. Mentality 3. Has been here 17 years. American born, of American parents. Had convulsions at 17 months, whooping-cough at 15 months, has had eczema and catarrh.

Nora is a low grade imbecile, excitable, and but very slightly trainable. It is interesting to note that, two years after admission, it is reported that she had made remarkable improvement, was doing well in kindergarten; this was apparently an imaginary result, perhaps due to change of environment, for she never got beyond that point and to-day cannot even do kindergarten work.

She is destructive, screams and tears clothes; she will sometimes do a few little things about the cottage.

There is no proof, in this case, that there is any hereditary feeble-mindedness; tho there is a great deal of physical trouble of one kind or another. The mentality is perhaps average.

CHART 220

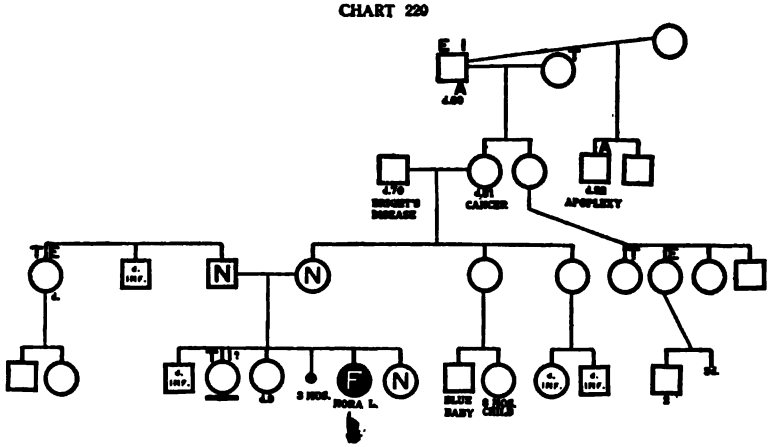


The mother was overworked and worried previous to the birth of Nora. Whether there was a sufficient disturbance to be the reasonable cause of the condition cannot be determined. The neuropathic ancestry seems more likely to be the fundamental cause, with the mother's condition accessory.

**CASE 221. HARVEY L.** 27 years old. Mentality 3. Has been here 11 years. American born, of German parents. Has had measles, whooping-cough and chicken-pox.

Harvey is probably a case of mental defect complicated by mental disease. He is insane at times, but at other times is quiet, obedient, cheerful, very forgetful; does not do very much work and needs careful supervision. He is a tall, well-built boy, rather good-looking.

The family history shows, without doubt, a morbid condition

altho it can hardly be said to be hereditary feeble-mindedness. A younger brother is indeed feeble-minded, but he is also epileptic, and his mental weakness may be a result of the epilepsy. The father and mother and their sibs are all normal so far as is known. The father, however, had locomotor-ataxia and, what there may have been in the grandparents, we have been unable to determine. An aunt of the mother died at forty, of melancholia.

CHART 221

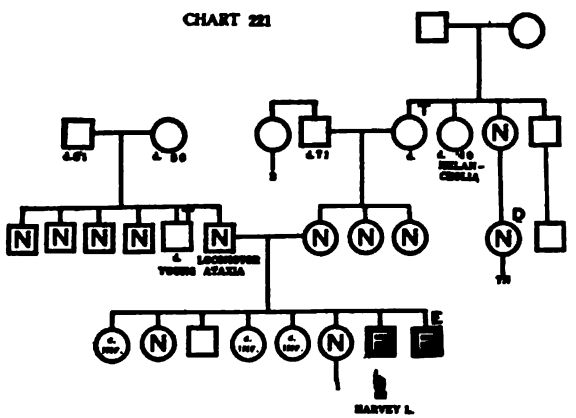

CHART 222

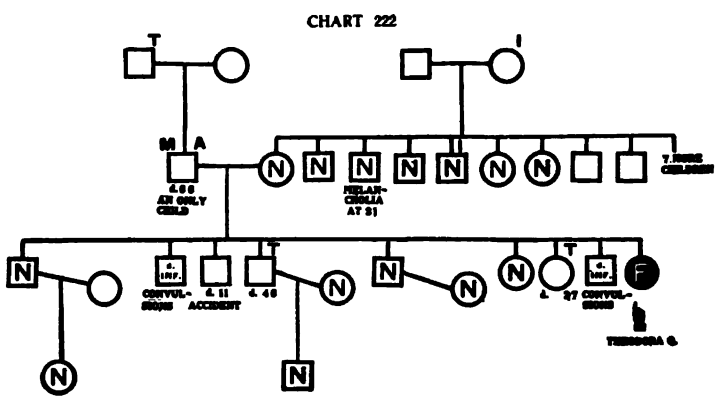

**CASE 222. THEODORA Q.** 34 years old. Mentality 3. Has been here 20 years. Began to walk at the age of two, had a fall at the same age.

She was just beginning to talk, upon admission at the age of fourteen, later improved somewhat in speech and learned to count to twenty.

CASE 219, FAY B., AGE 17. MENTALLY 3.
CASE 222, THEODORA Q., AGE 34. MENTALLY 3.
CASE 226, NATHALIE E., AGE 30. MENTALLY 2.

She is a quiet inoffensive woman, assists with the dormitory work and takes care of the more helpless children; is quiet, obedient, good-tempered.

There is nothing to account for Theodora's condition, except the neuropathic condition of the mother's family. We have no record of how severe was the fall and we only know that the father had periodic drinking spells. The family came from Germany and there is no record of them farther back.

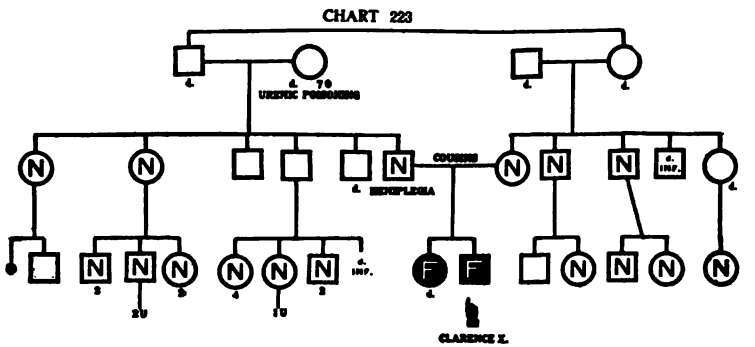


**CASE 223. CLARENCE X.** 18 years old. Mentality 3. Has been here 4 years. American born, of American parents. Had spasms at one month, measles at three years, whooping-cough at three years; has had pneumonia. Assigned cause, " acute attack of indigestion at the age of one month."

Clarence is a very low grade boy, and so far, it has not been possible to train him to any great extent. He has learned to string beads, can separate black and white; has learned to dress and undress himself; grows rough as he grows older; cannot understand a command; is silent.

The family history would indicate that this is a case of neuropathic ancestry. We have discovered no other feeble-minded individuals but there is considerable physical trouble. The father was a partial invalid from a stroke of hemiplegia. Clarence's older sister was defective and died at the age of three. This is a case where the marriage of cousins was apparently

disastrous; as a matter of fact the blood itself was bad, and the bringing together of the two strains from the same family doubled the potency, and brought out the defect.

**CASE 224. THOMAS D.** 18 years old. Mentality 2. Has been here 7 years. American born, of American parents. Had convulsions in the third year, whooping-cough at six years. Supposed cause, "premature birth, mother thrown from car." Thomas was a weak, sickly baby, with much emaciation; did not begin to walk until seven years old, began to talk at six.

This is a very low grade case, practically untrainable. Nothing has been discovered to adequately account for Thomas's condition. His brothers and sisters are normal; his parents probably the same, altho the father is said to lack force, and the mother is spoken of as a nervous, hysterical, not mentally balanced woman. The maternal grandfather died of paralysis. This case must perhaps be classed as due to neuropathic ancestry, but even for that, the data are not entirely satisfactory.

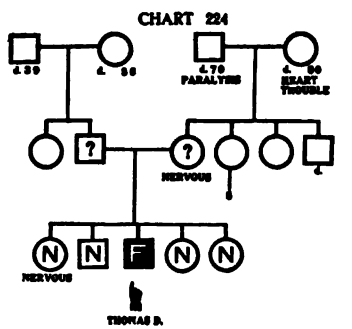


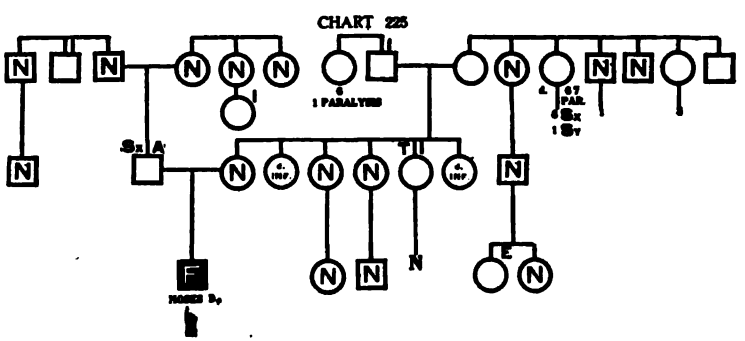


**CASE 225. MOSES D.** 19 years old. Mentality 2. Has been here 10 years. American born, of American parents. Had slight eczema when a baby, had membranous croup at nine months.

Moses is a low grade child, helpless and untrainable.

The family history is interesting and instructive. There are four cases of insanity in the family. The mother is normal, but the father is sexually immoral and alcoholic. A second cousin is epileptic. There is some syphilis. There is a neuropathic ancestry, but not hereditary feeble-mindedness.

**CASE 226. NATHALIE E.** 30 years old. Mentality 2. Has been here 2 years. American born, father German, mother American. Had whooping-cough at eleven years; has had spasms. Condition is said to be congenital.

Nathalie is very low grade, has some twitching of the face, swings her arms a great deal; talks by signs mostly; does no work; is untrainable and unimprovable. She cannot even wash and dress herself.

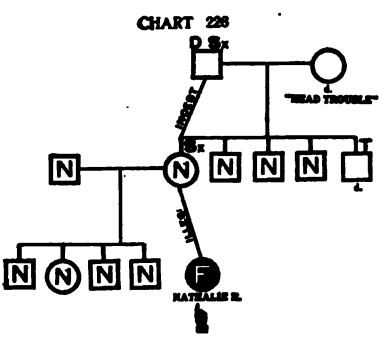


Nathalie's family history is unsatisfactory. She was an illegitimate child, the mother being normal and having normal brothers. The rest of the family are in the Old Country and little is known of them. The mother says that the father of this child was a friend of her father's. On the other hand, it is current in the neighborhood that her own father was the father of the child. Nathalie's mother was 18 years old when Nathalie was born; later she married a normal man and had four normal children.

Nothing has been learned that would certainly account for Nathalie's condition. The maternal grandmother died at 72 having suffered for nearly thirty years with a "head trouble." What this meant could not be learned.

**CASE 227. BENNIE H.** 21 years old. Mentality 2. Has been here 10 years. American born; father American, mother Canadian. Has had partial paralysis of the throat or palate.

Bennie is a typical idiot of low grade, both in appearance and in ability; feeds himself, but everything else must be done for him.

There seems to be nothing that would strictly account for this boy's condition. The parents are normal altho of rather low intelligence and shiftless, but still able to make a precarious sort of living.

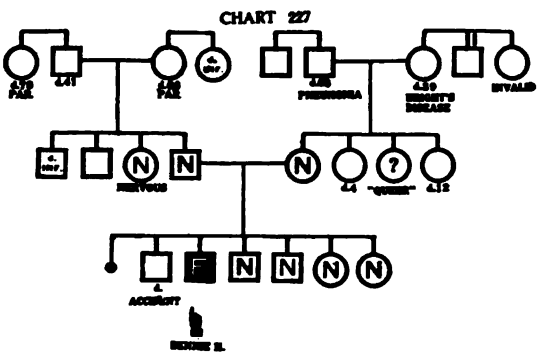


The mother's maternal uncle is said to have lost his mind because of worry. It might well be called in Tredgold's terminology a "morbid heredity" but aside from Bennie's, there seems to be no true mental defect.

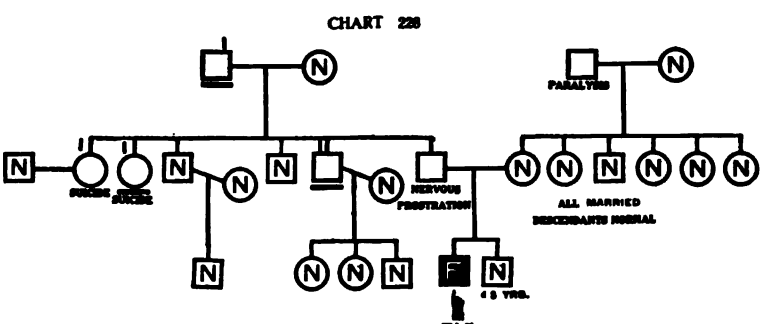


**CASE 228. IRA M.** 18 years old. Mentality 2. Has been here 10 years. American born, of American parents. Has never been sick.

Ira is one of those unfortunate cases with an almost complete lack of mind and a very high degree of nervous instability. He

is very excitable, sometimes even violent. He is perfectly helpless and untrainable.

The mother's family seems to be normal, tho her father had paralysis. On the father's side, there are four cases of insanity.

**CASE 229. HARRY Q.** 38 years old. Mentality 2. Has been here 25 years. American born, of American parents. Has had measles, whooping-cough, convulsions and paralysis at the age of five, cholera infantum at thirteen months, and marasmus. Condition is said to be congenital.

Harry is a very low grade boy with all the characteristics of the idiot, except that he has been trained a little more than is usual with the idiot.

He seldom speaks, and can do very little. At home it was claimed he could "split a little kindling wood, nail boards a little, bring wood and water." Here, he is able to help himself a little, but is cranky, has "wild" spells and is unclean.

CHART 229

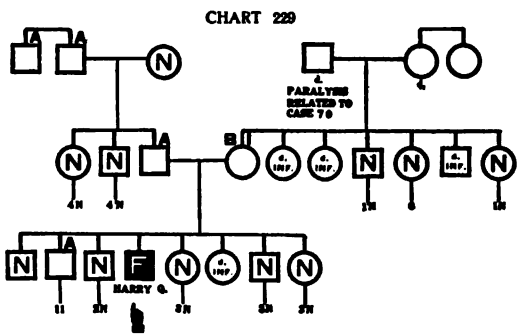


The family history puts this case at once into the group of neuropathic ancestry rather than feeble-minded heredity. The mother was insane and blind; the maternal grandfather died of paralysis and the father and paternal grandfather were alcoholic. Apparently the alcoholism is not so significant as the paralysis and insanity on the mother's side.

**CASE 230. ISADORE T.** 12 years old. Mentality 2. Has been here 5 years. American born, of American parents. Had whooping-cough at the age of three months; has had spasms and pneumonia. The whooping-cough is the assigned cause.

Isadore is a low grade boy, altho in some ways quite attractive. He soils and wets clothing both day and night; cannot do anything in school; is restless, affectionate, very excitable and sensitive; cannot dress nor undress himself; tries to do some work but accomplishes nothing.

Isadore is one of those delusive cases which, for some reason, always excite hope and the expectation of better things, but which never improve; perhaps this is due to the fact that he comes from a good family and has inherited some of those qualities that make the child more or less pleasing in spite of his defect.

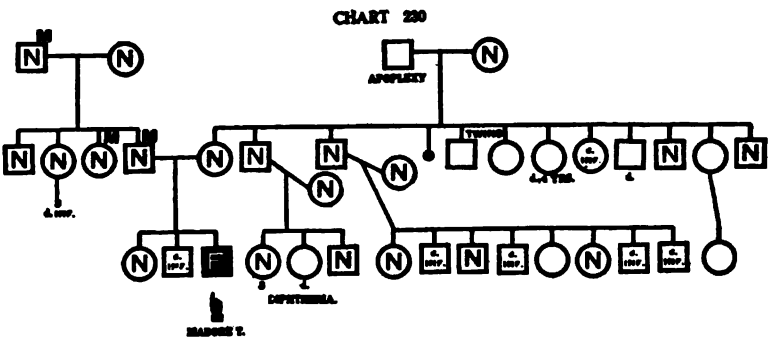


So far as discovered, there is no sign of feeble-mindedness in the family, and the persons seen are surely normal and intelligent people. Isadore has had several experiences which may be taken into account. The birth was difficult; a servant fell with the child when he was a baby; and migraine seems to have been hereditary in the father's family. He suffered with sick headaches about once a month; his father suffered from them all his life and a sister of the father had the same difficulty, the spells coming on suddenly and almost like fits. On the mother's side the only thing especially noticeable is that the father died of apoplexy. Clearly a case of neuropathic ancestry.

CASE 231. QUIGG T. 27 years old. Mentality 2. Has been here 17 years. American born, of American parents. Had whooping-cough,

CASE 229, HARRY Q., AGE 38. MENTALLY 2. (top)
CASE 232, GODFREY T., AGE 18. MENTALLY 2. (centre)

eczema, cholera infantum. Condition said to be congenital. Cause given is, " maternal impressions or lack of vital material in mother at the time."

Quigg does not talk, sleeps quietly, cannot play, does not work; is cheerful, clean in the day time, affectionate, sensitive, rather destructive, easily managed.

There is no other feeble-mindedness discoverable in this family. Indeed most of the people have proved to be distinctly normal. There is, however, rather an unusual amount of physical defect. The paternal grandmother died of "creeping

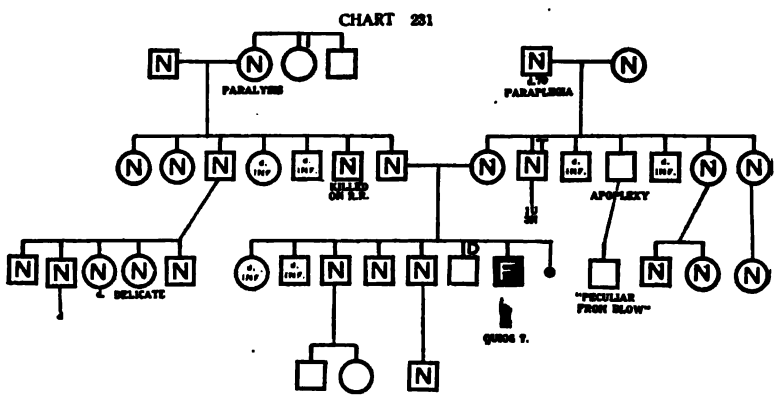


paralysis," a sister of hers had melancholia. The maternal grandfather died of paraplegia, the mother had arteriosclerosis, the father had rheumatism and catarrh, while the children of this pair were either non-viable or not strong. We cannot classify it as a case of hereditary feeble-mindedness, it is clearly one of neuropathic ancestry. Wassermann reaction is positive.

**CASE 232. GODFREY T.** 18 years old. Mentality 2. Has been here 7 years.

This is a low grade case and practically untrainable. Sometimes he can undress himself but has never been able to dress. He seems to understand a command and does some little errands about the house; he cannot talk — only chatters.

The family history is too deficient to give us anything conclusive. A younger brother has a speech defect but the parents

CHART 232

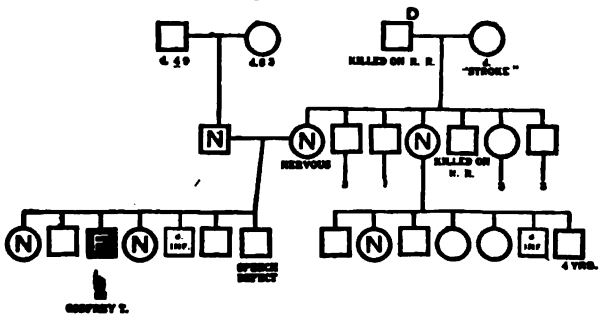

seem to be normal. The maternal grandmother died from paralysis at sixty-two, which puts the case into a group of many similar ones where nothing is discovered other than some form of nervous trouble like paralysis.

CHART 233

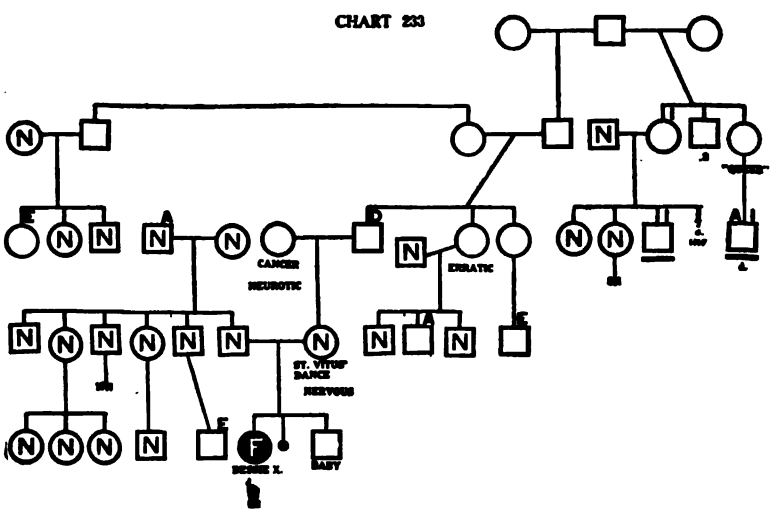


CASE 233. BESSIE X. 15 years old. Mentality 2. Has been here 8 years. American born, of American parents. Had a fall at the age of three; had whooping-cough at one year; paralysis at three; mumps and chicken-pox at two. Condition is said to be congenital.

Bessie is a low grade child and entirely helpless. The family history in this case is an unusually difficult one to understand; there seems to be no hereditary feeble-mindedness, but the epilepsy is probably hereditary and there is also some insanity. If we attempt to account for Bessie's condition, we conclude that it is a summing up of various morbid tendencies, which have appeared at various times, in several generations. That there is some hereditary taint in this family, there can hardly be a doubt. Bessie has a cousin who is epileptic, and a number of more distant relatives, who are insane or epileptic. Others have been pronounced "queer and peculiar."

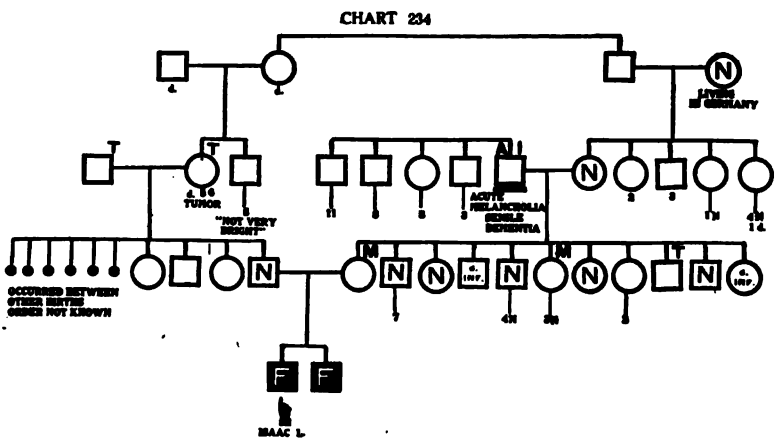


**CASE 234. ISAAC L.** 16 years old. Mentality 1. Has been here 10 years. American born; father and mother German. Had scarlet fever at the age of two years; has had chorea. Condition is said to be congenital.

Isaac is a microcephalic idiot. He is unintelligent and untrainable; does not talk; walks totteringly, goes up and down stairs "one-sided."

This is an interesting case in that a younger brother, the only other child of the parents, is also microcephalic and fully as low grade as Isaac.

Whether one is to look for heredity in this family is very hard

to say. There is more or less physical trouble and some mental, but how it could account for such low grade conditions and especially the microcephaly, it is impossible to decide.

We have not found any other mental defectives among those that we have traced. The maternal grandfather was alcoholic and insane, had acute melancholia and finally senile dementia. Our boy's mother and her sister had migraine, but nothing here would usually be considered sufficient to account for the condition of Isaac and his brother.

Isaac gives a positive Wassermann reaction.

CHART 235

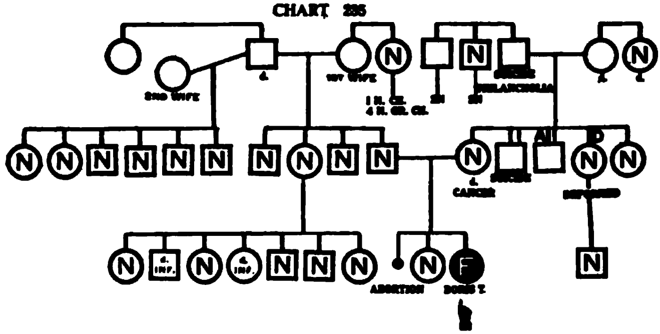

CASE 235. DORIS T. 12 years old. Mentality 1. Has been here 10 years. American born, of American parents. Had whooping-cough at the age of two years; had spasms. Instruments were used at birth. Condition is said to be congenital.

There seems to be no feeble-mindedness in this family. An older sister is normal. There was a miscarriage, earlier, which was brought on by the mother herself. The father and his family are all normal. The mother died eight months after Doris's birth, following operation for carcinoma of the intestines. She had two brothers insane, one was also alcoholic. Our child has always been very delicate. It was a forced birth and instruments were used. She has many *petit mal* attacks. She is perfectly helpless, has to be fed, makes no improvement.

## ACCIDENT GROUP

The following 57 cases, Nos. 236—292, compose the Accident Group. We have included here cases in which accident, including disease, is either the only assignable cause or at least furnishes the most plausible theory.

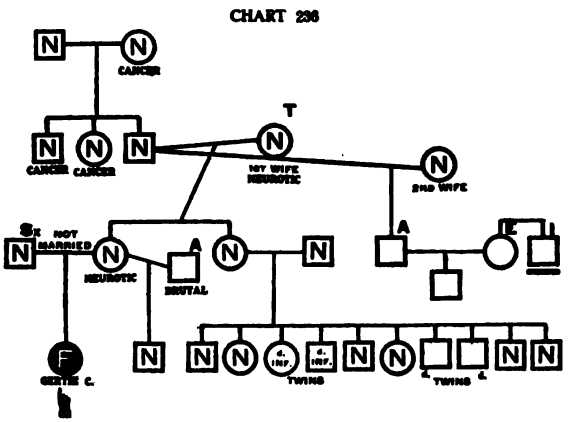


**CASE 236. GERTIE C.** 23 years old. Mentality 11. Has been here 17 years. American born, of American parents. Has had convulsions, peripheral paralysis at one time, chorea and locomotor ataxia or spinal sclerosis.

When admitted at the age of six, it was recorded: "She looks like a pretty child of three. Walks totteringly, cannot dress herself, but partially washes herself. Understands command, speaks slowly and hesitatingly, is clean and has good habits." After admission she improved marvelously. Memory and attention were excellent; she learned to sew well in the kindergarten and help with the low grade children; could make beds as well as anyone.

Although her ataxic condition affects her speech organs as well as her limbs, her persistence and relatively high grade mentality have enabled her to get considerable control, so that she even

writes a letter and can dust and sweep and dress the children. She has a remarkable memory, adds rapidly, and multiplies small numbers without the use of objects. She is an excellent cottage helper. She is cheerful, active and obedient, affectionate; is good-tempered and truthful, thoroly reliable; talks and behaves more sensibly than most of our girls.

The story of Gertie's mother is particularly tragic; it is a case of a young woman, normal mentally, getting into trouble in her early youth and suffering from the shame; too proud to ask help from any one, deserted by every one, marrying a man whom she did not love, out of love for her child, to give her a father and a home, leaving home because of the way he abused the helpless little thing, and carrying her burden always closely hugged to her heart. Our Field Worker reports having spent two hours with her and says: "No one could doubt the absolute sincerity of the woman, nor help respecting her for the way she has faced the truth of her act and accepted all its consequences."

A glance at the chart shows us that there is no evident cause for Gertie's condition; accordingly the following study of the mother is of some interest and perhaps importance.

When Gertie's mother discovered that she had been betrayed, she went to the mother of the young man who was the father of the child; this mother interested herself sufficiently to take Gertie's mother to the Almshouse where she left her. Here she was put to work at exceedingly hard labor which proved too much for her, so much so that she succumbed and had to be carried out on a stretcher; when she recovered she was put at easier work scrubbing the floors. This continued until she was taken ill before her child was born. At night or whenever she was free, she would creep to some spot as nearly hidden as she could find, and sob; she said she cried the whole eight months thru. One particular instance she remembers. Shortly before she was taken ill herself, there occurred in the ward the delivery of a woman who was seized with horrible convulsions which dis-

torted her almost out of human form; for several hours she stayed with this woman and worked with her until she finally died. The mother avers that when her child was born it imitated the convulsive movements of the woman whom she had seen die. She herself, was soon taken very ill and at the time of the birth her temperature was 105 and the baby's 103; this condition lasted three days and three nights. Perhaps we may find in these facts the cause of Gertie's defect, at least we know of nothing else.

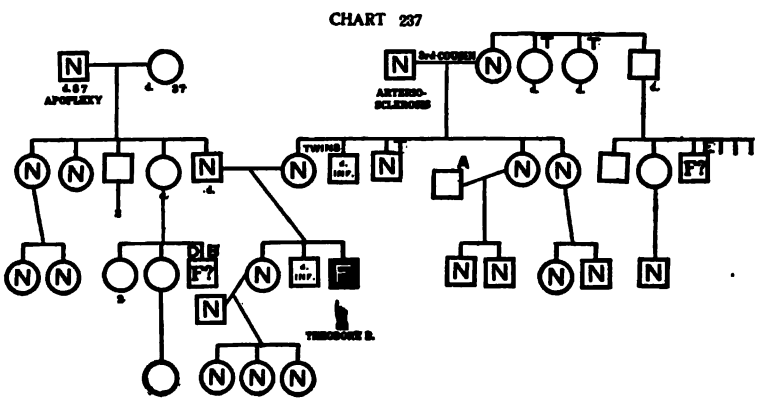


**CASE 237. THEODORE B.** 22 years old. Mentality 9. Has been here 3 years. American born, of American parents. Had measles at the age of five; double pneumonia when two months old; catarrh of the stomach at the age of nine. Assigned cause, "premature birth and illness of the mother."

Theodore reads in the Fourth Reader, writes a good hand; will obey a command if it is given practically; uses bad language. He is inclined to be sullen and stormy; one of his worst habits is that of taking things that do not belong to him, which gets him into much trouble. He has spent considerable time in private schools and generally is reported as doing well for a time and then falling back. None of his people ever discovered that he is mentally defective.

The family chart does not reveal any adequate cause for the defect. The family is clearly normal and there do not seem to be any very serious diseases which might affect this case.

Theodore was an eight months baby; it is reported that he was being tossed up in the air by his grandfather and struck his head against the chandelier; how serious this was and whether it could have affected the brain we have no means of knowing.

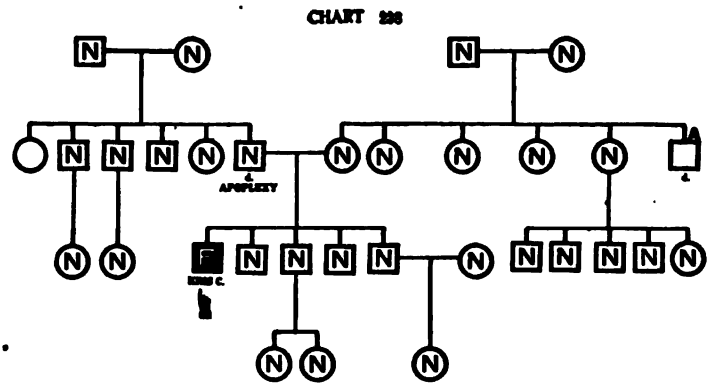

**CASE 238. KRIS C.** 40 years old. Mentality 9. Has been here 6 years. American born, of American parents. His birth was difficult. He had measles at the age of two, whooping-cough at three, also has had pneumonia and has suffered from blood poisoning.

Kris is a high grade boy with a speech defect. It is said he knew his letters at the age of two; he can read anything, count indefinitely and do an errand and housework; makes no practical use of any knowledge that he has, but is a fair worker.

This is a remarkable case, as every one in the immediate family, with the exception of Kris, is known to be normal. Indeed it is a highly respectable family.

Kris's father was slightly alcoholic, that is to say, once or twice a year he lost control of himself in this particular, but this was long after the birth of Kris.

The difficult birth may have been the cause. The child's head was partly born for four hours.

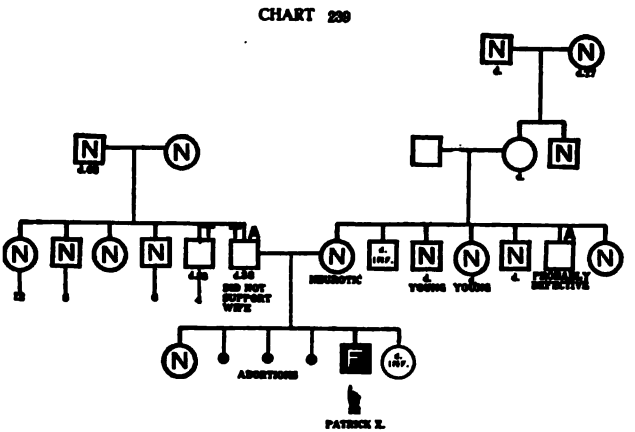


**CASE 239. PATRICK X.** 17 years old. Mentality 9. Has been here 7 years. American born, of American parents. Had whooping-cough, chorea, chicken-pox, and appendicitis.

Patrick was a sickly baby, weighing only 2½ pounds at birth. He talks distinctly, does some work, does errands, is affectionate, cheerful, fond of other children. He is extremely nervous; is hemiplegic and ataxic; has deformed hands and feet; is fond of play; has been trained to some manual work and can write a little; is fond of animals; can do some basketry work; has had the usual experience with "English"; writes a fair letter, but badly spelled.

Pat is the only mental defective in the family, so far as is known. An older sister is normal and married; a younger one died at the age of two years. The mother is a normal woman but somewhat neurotic. Her brothers and sisters were normal except one brother who was "probably defective" — he was so very alcoholic that it is impossible to judge of his mentality. The father of our boy was alcoholic and tuberculous and did not support his wife. He had a brother who was tuberculous. The rest of his sibs, together with his parents, were normal. Our boy's condition is attributed to medicine taken before he was

born. There had been three abortions produced by the physician who was "a friend of the family."

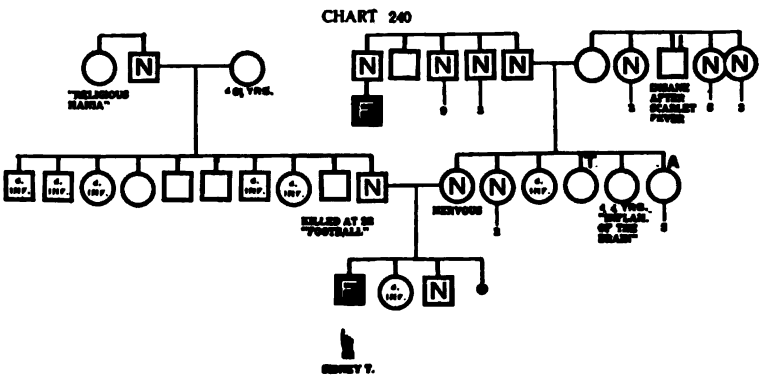


**CASE 240. SIDNEY T.** 19 years old. Mentality 8. Has been here 7 years. American born; father Irish, mother American. Assigned cause "instrumental delivery." Child had measles at the age of two, and mumps at the age of twelve.

Sidney is a moron, rather a nice looking boy; average size and well built. He had convulsions when he was a year old; has had none since. His mental defect showed at about four years of age. He had a fall at the age of three and began to lose his hearing from that time; it is now very poor. Birth was very difficult, labor was long and hard, instruments and anæsthetics were used. He talks very much but indistinctly. It is quite probable that, on account of his deafness, this boy tests a little lower than he actually is, his work would indicate this; at present he works in the dining room and kitchen. He has the usual characteristics of boys of his type, is generally obedient, sometimes stubborn, obstinate, rather sober, restless and quick-tempered; undoubtedly some of these are accentuated by his deafness.

The following is a copy of part of one of his letters which will be recognized as rather more characteristic of a nine year old child than an eight.

Vineland N J.
June 15, 1910.

Dear Father & Mother & Brother.
I hope you are all well at hom and had a good time.
I will be gald when you bring me home in the 28 of June before the four of July.
I want some nice postal cards when I come home
I want you to give me a big time.
I would like to play with Ralph at home.
Mama I want Ralph to be a good Boy when I come home
I want to know how you are all getting along.
I am getting along Fine in the Cottage.
I play ball one Saturday and I had a good time.
I want you to bring me home in the 28 of June before the Four of July and I will have a good time at home.
You did not send me no letter.
I want you to write me a letter and I had a good time on June 8th.

A view of the family chart makes us doubt the heredity in this case and we are inclined to accept the injury at birth as the cause of this defect. It is true that the mother's uncle had a son who was feeble-minded but this is far removed, and it is quite possible his defect may have been due to his mother's family or to an accident.

**CASE 241. FLORA T.** 17 years old. Mentality 8. Has been here 4 years. American born, of Irish parents. Had varioloid at the age of two, whooping-cough at eight, measles at nine. Supposed cause, "a serious fall of the mother three weeks before the child was born," from which she was very ill.

Flora is a moron. She reads in the Second Reader, counts to twenty, can write a letter, but it is very difficult to read, both on account of the handwriting and the spelling, has no idea of punctuation nor arrangement in sentences. She is affectionate,

very excitable and quick-tempered; is thieving. She does good housework, washes dishes, makes beds, and is an excellent waitress; is fond of play, is somewhat defective in speech and in sight; is highly trainable. She has tubercular glands.

CHART 241

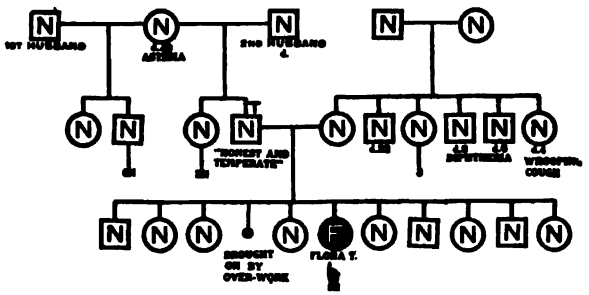

A glance at the chart almost compels us to accept the theory of the mother's fall as the cause of the condition. The mentality of all of the family has been determined and all are normal.

In the absence of details in regard to the fall and the symptoms of the illness which resulted, we cannot of course make any clear guess as to the probability of this being a sufficient cause. It is reasonably clear that there is no hereditary defect.

CHART 242

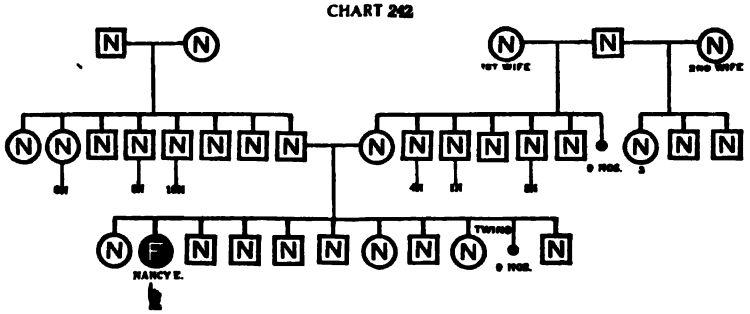

**CASE 242. NANCY E.** 18 years old. Mentality 7. Has been here 10 years. American born, of German parents. Had cephalhematoma.

**CASE 242, NANCY E., AGE 18. MENTALLY 7. (centre)**

Nancy is a high grade imbecile; has learned to do some of the simplest kindergarten work, but nothing above this; has learned to sew a little, but does mostly cottage and laundry work; talks a great deal, can dress and undress herself; makes beds; waxes floors; is cheerful but quarrelsome and stubborn; very excitable; inclined to be thieving; fond of children, will take care of them sometimes; is easily managed, if understood.

Nancy belongs to a thoroly normal, respectable family. There is nothing to account for the condition unless one accepts the mother's theory. While it sounds somewhat like the discarded theory of maternal impression, yet it is not impossible that the fright and shock which the mother received may have interfered with the nutrition of the unborn child and resulted in the mental defect. The story in brief is as follows:

Shortly before this child was born, the mother was compelled to take care of a sister-in-law who was in a similar condition and very ill with convulsions. Our child's mother was many times frightened severely as her sister-in-law was quite out of her mind. She says that this child's ways often recall to her the sister-in-law's actions at that time.

**CASE 243. WALLACE N.** 14 years old. Mentality 7. Has been here 2 years. American born, father English, mother American. Had rickets at birth, whooping-cough at nine years, measles at ten years; had convulsions when young. Condition is said to be congenital.

Wallace is an interesting little chap; walked when a year old and talked when two years old; is very nervous and excitable; is under size; is disobedient; when admitted knew letters, but could not read; could count to a hundred, could write his name; memorized easily. He does fairly well in basketry, but he has about reached his limit intellectually.

The family are apparently normal. An older sister and a younger brother are also said to be normal but have not been seen. No adequate cause for the condition has been discovered.

There are two facts, to be mentioned only because in such a case every detail is important. First, the father is said to be much older than the mother, and second, it is reported that they used drugs to produce an abortion. It used to be considered that the age of parents, at the time of the birth of a defective child, had some effect in a causal way, but this has not been borne out by the facts. Possibly the drugs used might affect the nutrition of the fœtus but it is impossible to say positively that this is so. At least it seems altogether improbable that there is any hereditary taint in this case.

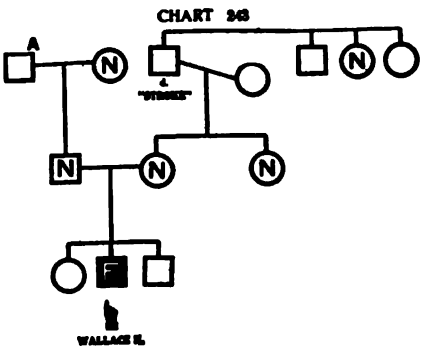


**CASE 244. MATTHEW W.** 30 years old. Mentality 4. Has been here 17 years. American born, of American parents. Had measles at the age of five, and whooping-cough at the age of seven. Cause of the condition, " instrumental delivery."

Matthew is a low grade boy, quite untrainable, and there are some symptons of insanity.

Matthew is an only child. The father died at 52, of pneumonia, the mother and her family are normal. The maternal grandfather died of acute indigestion at 86, the grandmother died at 90

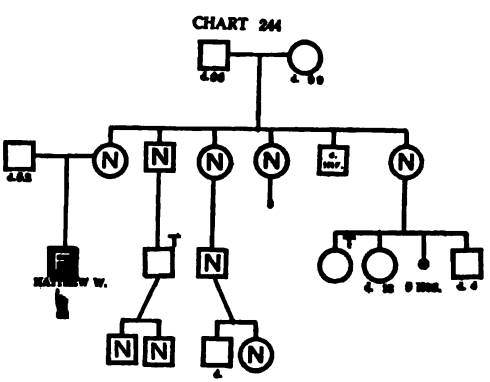

of stomach trouble. No hereditary taint is traceable in this family, and the condition is supposed to be due to difficult birth, instruments were used and there was partial strangulation.

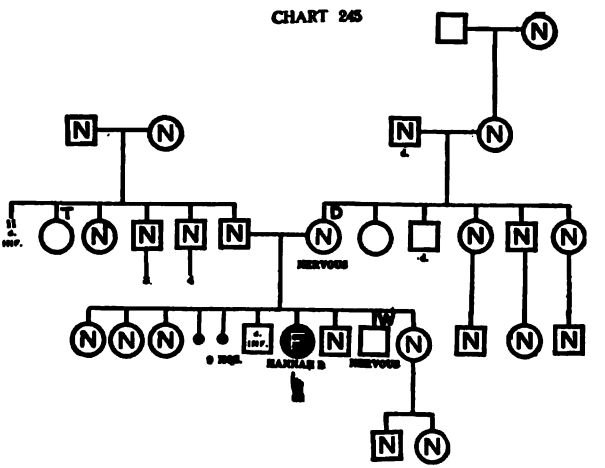


**CASE 245. HANNAH D.** 29 years old. Mentality 3. Has been here 18 years. American born, of American parents. Has had measles, whooping-cough, hysteria, cerebro-spinal meningitis, cholera infantum and chorea. Assigned cause, " congenital, and morbid disease of spinal cord and brain."

Hannah is a low grade child, very nervous and excitable, talks little, takes little interest in things, can group colors and string beads, but with little interest.

There is no evidence of any other feeble-mindedness in the family and the condition is apparently due to the condition of the mother during pregnancy. She was very frail and ill during the latter part of the period.

Hannah was born with hair long over the shoulders. She did not walk until she was four years old.

**CASE 246. GUSSIE Q.** 16 years old. Mentality 3. Has been here 5 years. American born, of American parents. Had measles at three years; there is absence of the thyroid gland; is therefore a cretin, tho the symptoms are by no means typical.

CHART 248

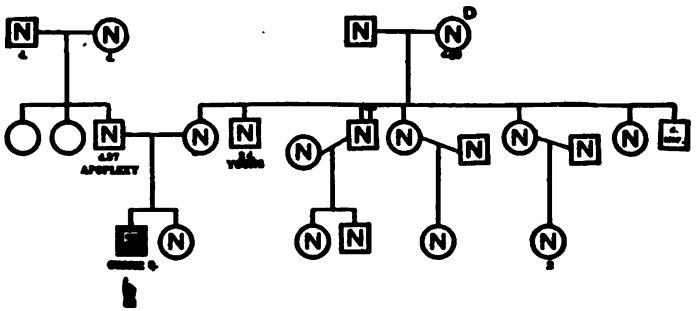

Gussie is an interesting little fellow, much under size, as would be expected from the fact that he is a cretin. He is apparently a deaf mute; has made some little progress in

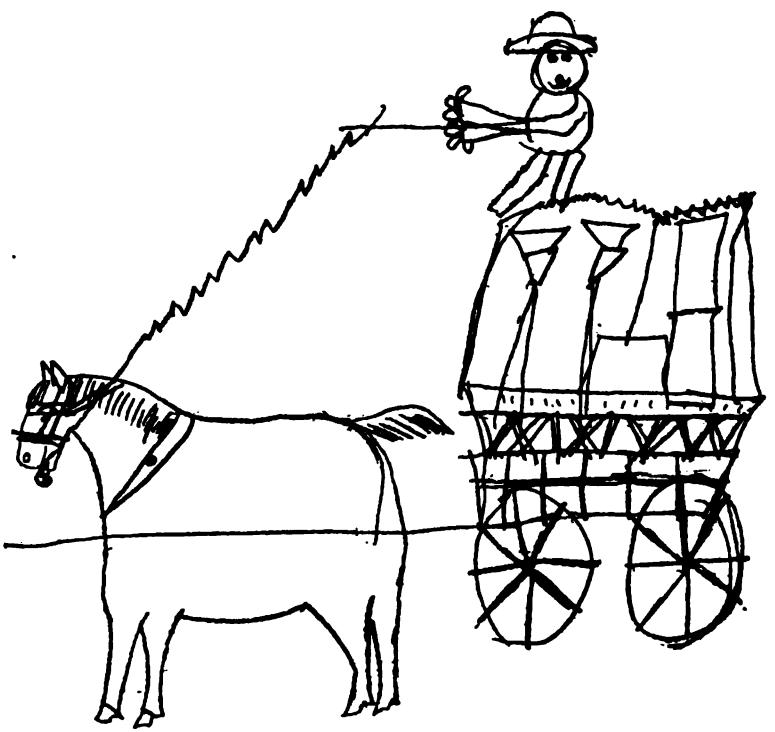

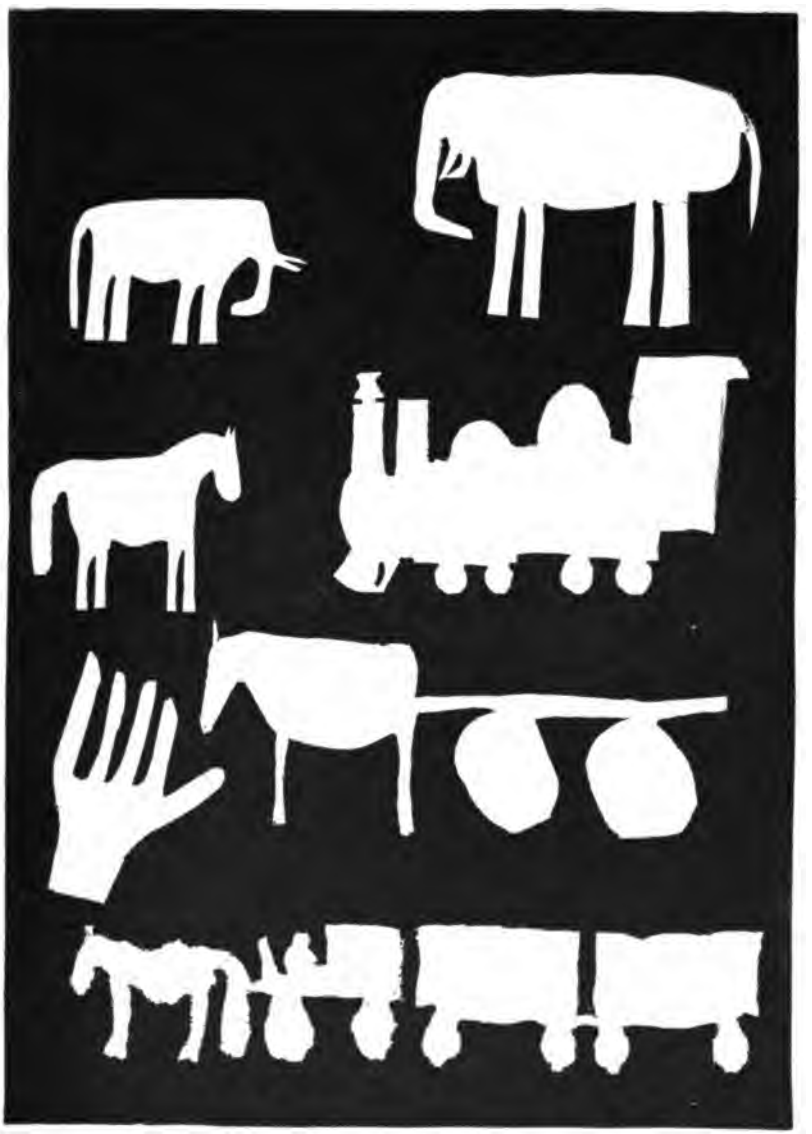

kindergarten, is particularly adept at free hand cutting; can also tear out the figures, as can be seen from the accompanying reproductions. He is learning to talk a little and has learned to make a bed.

The family history is thoroly good and the members are intelligent with no mental defect among them. The father died of apoplexy after a peculiar illness; one physician considers it a case or form of general paralysis due to a latent rather than an acquired condition. Unfortunately the history farther back is too imperfect to confirm this.

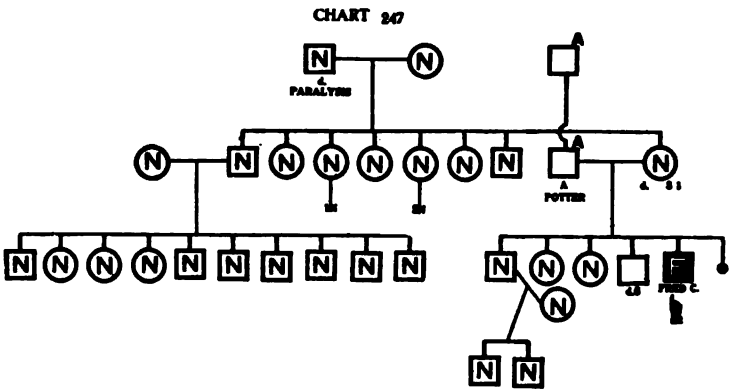


**CASE 247. FRED C.** 24 years old. Mentality 2. Has been here 16 years. American born; father American, mother Scotch. Has had chorea and diphtheria.

Fred was a sickly babe, weighed only three pounds at birth. He is low grade and untrainable. He can carry a tune, however, and sings to himself most of the time. This is another one of the unsettled cases, where the mother's family is entirely good and normal, but, unfortunately, of the father's family we know practically nothing except that he was alcoholic; his whereabouts are entirely unknown.

The mother's explanation of the condition is, that during the third month of pregnancy, she attended a sick child who finally

died in a convulsion. Soon after Fred was born the mother noticed contortions similar to those of the child that died.

Fred's father was a potter and lead poisoning has been suggested. But there is no evidence that lead poisoning in the father could affect the offspring.

A Wassermann test on Fred gave a positive reaction.

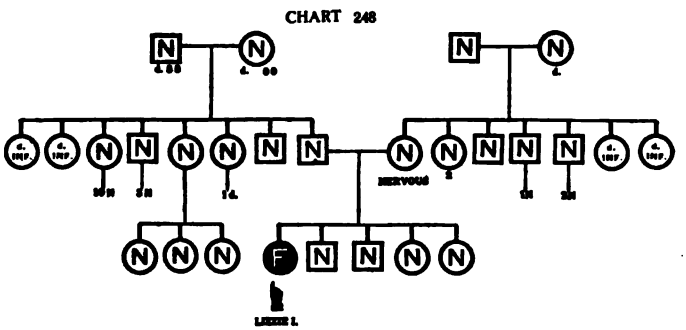


**CASE 248. LIZZIE I.** 24 years old. Mentality 2. Has been here 17 years. American born, of Irish parents. Had whooping-cough at four, malaria and grippe at five, spasms at twenty years.

Lizzie is low grade and untrainable. This is a case possibly due to shock to the mother. There is clearly no hereditary taint. It is a thoroly respectable and intelligent family. The father and mother are both normal, as are all the relatives. The mother is a very highly nervous woman and about nine weeks before her child was born, there came four deaths in her family in quick succession. Some of these were announced by telegram and produced a great shock upon the mother. No other cause for the condition of this child is known.

Lizzie gave a positive Wassermann reaction.

**CASE 249. HOWARD H.** 27 years old. Mentality 1. Has been here 20 years. Had measles and whooping-cough when a year old. American born, of American parents. Supposed cause, " hemorrhage of the mother at the birth of the child."

Howard is a low grade case, entirely untrainable; is said to have had inflammation of the lungs when a baby, and convulsions occasionally. Sometimes has insane spells in which he cries and jumps about; breaks things.

There is no evidence of hereditary feeble-mindedness in this family, altho there is also no proof that it is not there. In

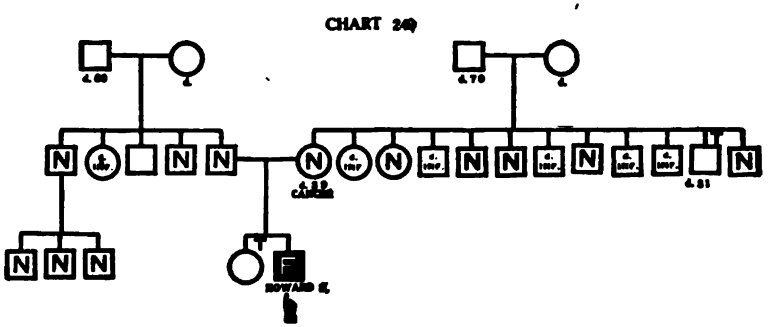


the absence of such proof we may accept the mother's condition at the time of the birth, as the probable cause. She was very ill and even her life was despaired of, and the baby was neglected in order to save the mother; afterward it was discovered that the child was alive and then efforts were made to resuscitate it. Altho never bright he has been of somewhat higher intelligence than he now manifests.

**CASE 250. FLORENCE D.** 31 years old. Mentality 6. Has been here 18 years. American born, of Irish parents. Had measles at the age of six, and whooping-cough the same year; had bowel trouble. Condition is said to be congenital.

Florence is of the Mongolian type but of rather higher mentality than usual. Is good natured, takes care of herself. Does practically nothing in the three R's, did learn the alphabet and learned to spell a half dozen words, but has become a good Institution worker, sews nicely, helps in the kitchen and dormitory. Since she has been made a helper and care-taker

CASE 248, LIZZIE I., AGE 24. MENTALLY 2.
CASE 250, FLORENCE D., AGE 31. MENTALLY 6.
CASE 258, PAUL S., AGE 16. MENTALLY 4.

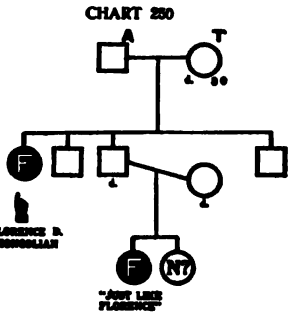


of lower grade children, she has become most valuable and gives no trouble.

The family history is too meager to be of any special value, except that it is interesting to note that a younger brother is married and has two children, one of whom is reported to be "just like Florence." Whether that means she belongs to the Mongolian type we do not know, she lives in the west with a relative.

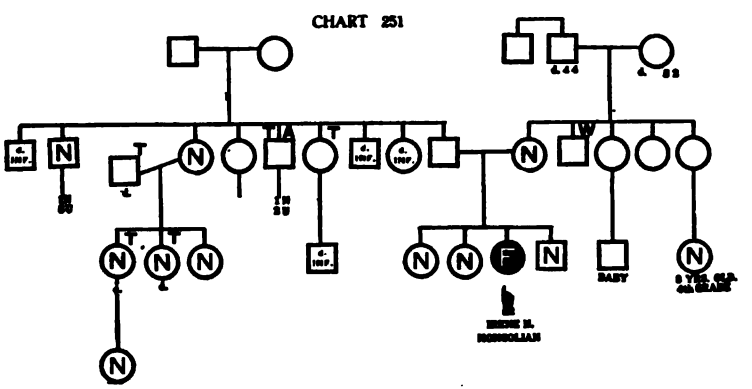


**CASE 251. IRENE N.** 16 years old. Mentality 5. Has been here 4 years. American born, of American parents. Had whooping-cough at the age of seven, measles at nine; had gastro-enteritis at the age of ten days, which is supposed by the family to be the cause of her mental condition.

Irene belongs to the Mongolian type and has probably reached the limit of her mental development. She is somewhat trainable, can make beds, and do a little table work, sews and weaves a little and seems to be improving somewhat. Can count to ten and knows colors.

As usual in the case of Mongolian children we find no other

defect in the family, and we have been able to learn in this case that many, at least, were normal. The Mongolian type is congenital but not hereditary.

CHART 252

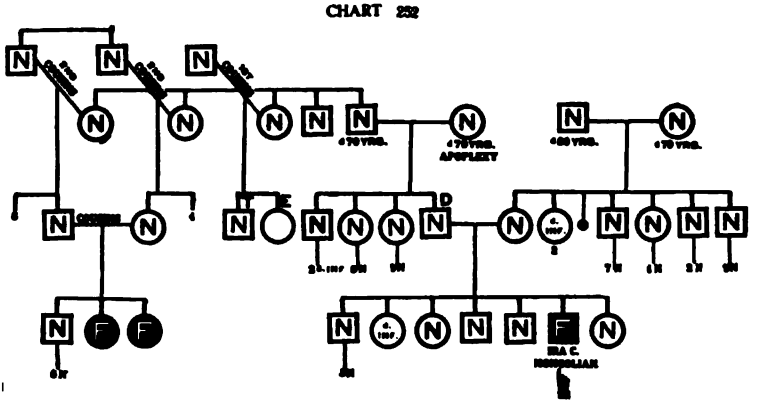

**CASE 252. IRA C.** 21 years old. Mentality 4. Has been here 14 years. American born, of American parentage. Had chicken-pox when six years old.

Ira is a typical imbecile of the Mongolian type. He walked at the age of four and a half, has the bad eyes which usually characterize this type; is fond of play, active, frank, truthful, walks with a shuffling gait which is also characteristic. This type seldom does anything with the three R's or with industrial work of any particular kind.

Ira is somewhat helpful in the laundry and is not bad to get along with.

**CASE 253. THEODORE E.** 18 years old. Mentality 4. Has been here 5 years. American born, of American parents. Had scarlet fever at the age of two.

While the family is not quite as clear of physical troubles as usual, careful search reveals no trace of mental deficiency. The father's fraternity inherits melancholia from their father, in conjunction with good business ability from the mother. The pater-

nal grandfather's sister was insane and she had a grandson that was markedly less bright than his sibs, but this is quite far removed from our child. Our boy is rather unusually pleasant,

CHART 253

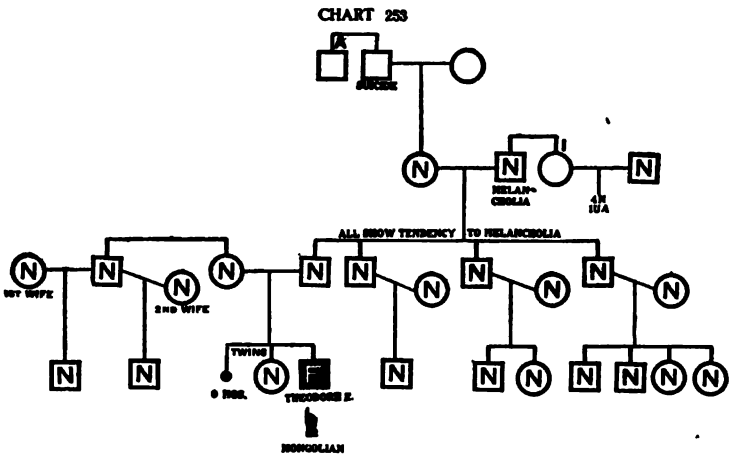


with the usual Mongolian characteristics. He is able to do simple errands very well, really understands much more than he at first appears to.

CHART 254

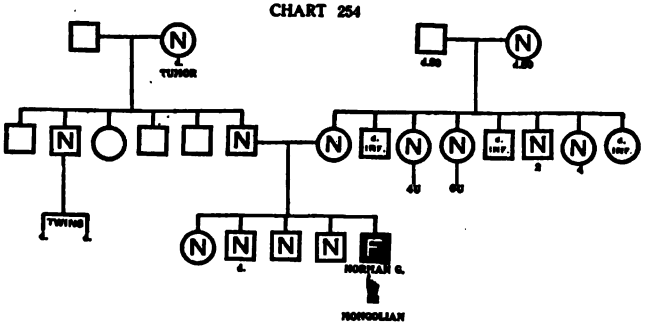


**CASE 254. NORMAN G.** 19 years old. Mentality 4. Has been here 7 years. American born, Irish parents. Had erysipelas at the age of 11. Adenoids and tonsils have been removed.

When admitted Norman knew his letters by rote, but not by sight. He improved a little in the kindergarten so that he knew

the colors, but soon reached his limit and has made practically no improvement in basketry or English, and almost as little in woodwork. Cannot write at all, — only scribbles marks. Is a helper in the cottage but needs close watching. He is very shy, but appears pleasant; agreeable and affectionate.

No other defectives are found and the relatives are highly respectable people.

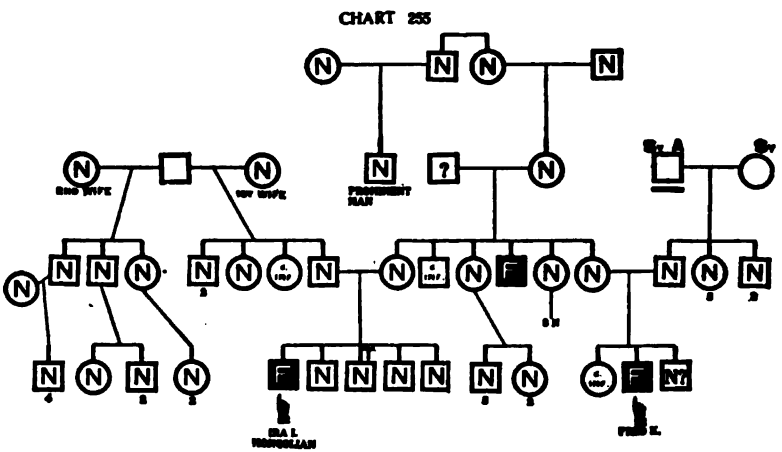


CASE 255. IRA I. 25 years old. Mentality 4. Has been here 14 years. American born, of American parents. Has had meningitis, cholera infantum at the age of four months, measles, whooping-cough, and diphtheria. Assigned cause, " cholera infantum and probably meningitis."

Ira was eleven years old when admitted, had a dragging gait, could not read, knew no numbers nor color nor form; was fond of music, was gluttonous, was affectionate, and had defective speech. Under training, he learned to know colors, except blue; learned to sew cards nicely; became orderly and neat in school but was careless of his clothes; learned to count to ten. Never got much beyond this in these lines, but learned well in industrial work. He sweeps and dusts and makes beds, washes and polishes floors, is a good worker about the cottage and farm.

Ira is very cheerful, active and obedient, rather affectionate,

is very willing, is truthful and good-tempered. Is unusually lively for a boy of his type and grade.

Ira belongs to the Mongolian type, which at once settles the cause of his condition so far as the reasons assigned are concerned. He may have had cholera infantum and meningitis but the Mongolian characteristics show that he was defective before these attacks. This makes the case interesting because it warns us that we must be on our guard against accepting in any particular case even what is regarded as a real cause. If Ira were not of the Mongolian type we might conclude that the meningitis was certainly the cause of his condition because of its known effect in this direction.

He is quite different from others of his type and it is quite possible that the meningitis may be responsible for that difference, altho the striking thing is that the difference lies largely in the direction of greater activity, not, however, of the intelligence.

A glance at the family chart shows another interesting thing. In most cases we find that the child of the Mongolian type belongs to a family where there are no other defectives, in fact we have almost thought it was a certificate of good blood; in this case, however, we find other defectives, which shows us that there are exceptions to this rule. Ira's uncle is feeble-minded and he has a cousin feeble-minded, who is also in this Institution. So far as the cousin is concerned his defect might have come thru the other family, by marriage. The immediate family of Ira follow the rule, and his four younger brothers are all normal as are also his father and mother.

**CASE 256. FRED M.** 13 years old. Mentality 4. Has been here 2 years. American born, of American parents. Condition is said to be congenital or caused by measles at three. The child also had whooping-cough at four and pneumonia at six.

Fred is rather small for his age, talks little, but can be understood, can dress, undress, wash himself and comb his hair.

Is cheerful, inclined to be cranky and stubborn; is generally truthful, quick-tempered, mischievous, rather lazy, tho usually obedient. Can do simple housework; cannot read but knows a number of words by sight. Likes to dramatize short stories.

CHART 256

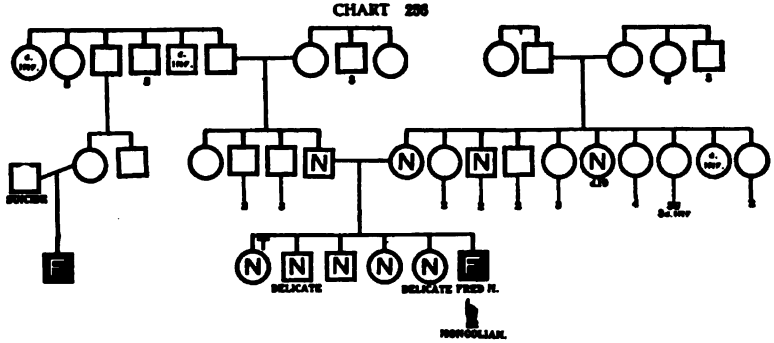

The only thing worthy of note here, is that a second cousin of Fred is also feeble-minded but we know nothing of the father of this boy except that he committed suicide at the age of 34. It is entirely possible that there may have been hereditary defect in this line or that there is some other sufficient cause for that case of defect without concluding that there is anything in the blood of the common ancestry.

CHART 257

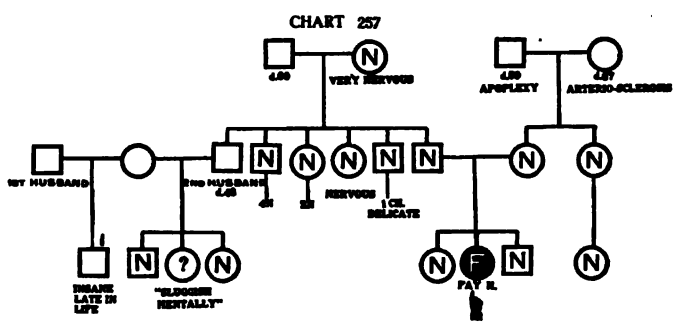

**CASE 257. FAY N.** 13 years old. Mentality 4. Has been here 6 years. American born, of American parents. Had erysipelas at the age of six; has double congenital cataracts; has inclination to croup.

The heredity is normal, no mental defect being found anywhere, altho there is considerable nervousness. The maternal grandfather died of apoplexy, and the grandmother of arteriosclerosis. The paternal grandmother is reported very nervous as are some of the others of this family. Fay is an interesting little girl, affectionate and cheerful, does no work, is easily managed, has quite a sense of order and cleanliness.

**CASE 258. PAUL S.** 16 years old. Mentality 4. Had been here 5 years. American born; father Danish, mother Irish. Had whooping-cough at the age of 4 years. Died of tuberculosis.

In countenance Paul was not quite typical, but the other characteristics were all present. He was a cheerful, good-natured boy, quiet and obedient, sensitive, somewhat excitable. Was never able to do any school work and hardly any manual training; he learned to work about the house, making beds, sweeping, dusting, etc. He talked, but indistinctly.

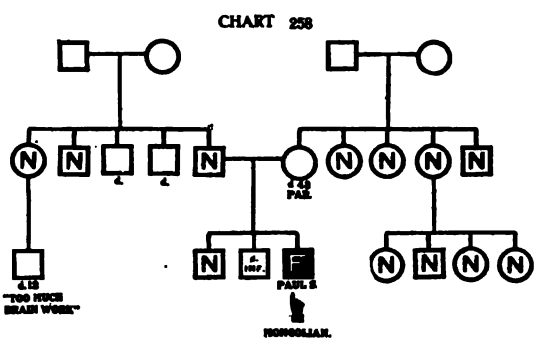


The mother died of paralysis at 43. The father is said to have been subject to special mental and bodily overtaxation prior to the conception of this child. Also the mother was overworked during pregnancy.

**CASE 259. IRA U.** 21 years old. Mentality 4. Has been here 11 years. American born, of American parents. Had pneumonia at the age of three, and measles at five. Has no palate. Mother supposed to have been affected by a man who had no palate.

Ira is thoroly typical. He does nothing significant in school work or in manual training. Can do errands, and lighter housework.

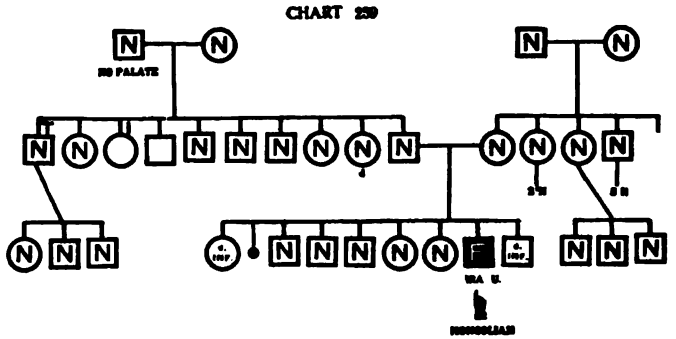

He comes from a good family with thoroly good ancestry. There are no defectives among them. A paternal aunt is said to have been insane with religious mania.

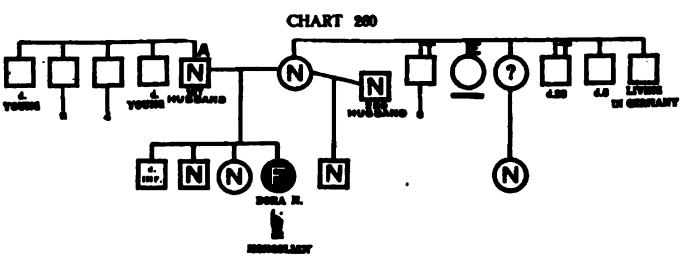

CASE 260. DORA N. 10 years of age. Mentality about 3. Has been here 2 years. American born, German parents. Had chicken-pox at the age of four, had measles and scarlet fever at six.

Dora is the last born in a family of four; commenced to walk at two years, does not talk; can dress herself; does simple kindergarten work and little errands in the house. She is rather an unusually low type for a Mongolian but quite probably her defective speech makes her appear a little lower than she is.

CASE 264, HENRY C., AGE 38. MENTALLY 7.
CASE 260, DORA N., AGE 10. MENTALLY 3.
CASE 268, DOTTIE I., AGE 9. MENTALLY 5.

The family history is perfectly clear of other feeble-minded individuals, although there is one epileptic in an asylum in Germany.

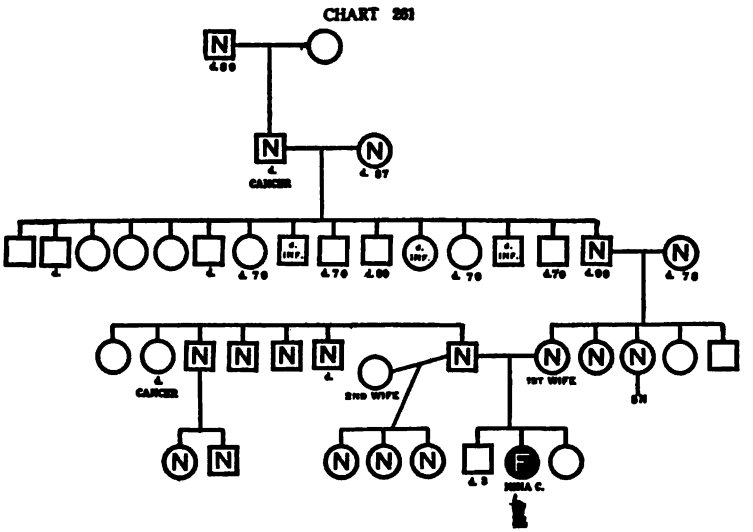


**CASE 261. NINA C.** 26 years old. Mentality 12. Has been here 13 years. Born in Japan, of American parentage. Has had convulsions, had chicken-pox at the age of 14.

This is an interesting case, more from the medical standpoint than from that of heredity. The child is supposed to have suffered from beri-beri and the mental condition is probably the result of this disease.

A glance at the chart shows that there is good evidence that the family is normal, and we may perhaps look for no other cause for the condition than that mentioned.

Nina is, mentally, one of the brightest in the Institution. She has a peculiar ataxic condition which affects her speech as well as her movements. She writes very sensible and interesting stories, and has a good memory for reproducing stories. She is a good worker in anything, where her physical condition

does not interfere too much. Takes great interest in her work. Helps in the mending room.

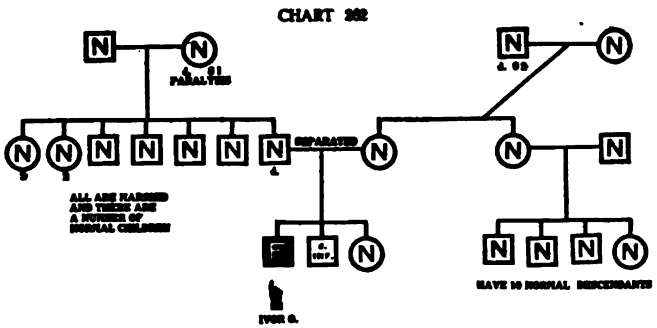

**CASE 262. IVOR O.** 48 years old. Mentality 10. Has been here 11 years. American born, of American parents. Has had measles, whooping cough and scarlet fever. Supposed cause, " a fall or scarlet fever."

Ivor is a steady, gentlemanly boy, polite, does not enter into discussion with other boys; tries to please, is willing to help. Attendants have only good to say of him. He will argue when told he has done wrong. He is cheerful, rather silent, obedient and affectionate; works in the boiler-house and shops; is neat and tidy, especially on Sunday; an ideal boy so far as disposition goes.

Ivor can read and write rather exceptionally well for a boy of his grade.

His family is thoroly normal and is composed of high grade intellectual people. The paternal grandmother, it is true, died of paralysis but we cannot as yet say that this has any significance. It seems necessary to accept the assigned cause of scarlet fever, especially as the high intellectual grade of the family shows in this boy, even tho the scarlet fever, or something else, has interfered with his complete mental development. He is quite different in disposition, manner, tendencies and impulses from the great mass of our cases of equal mental grade.

Following is a letter of Ivor's which, while there are some errors in spelling and capitalization, nevertheless in the whole contents and the train of his thought, and the ability to express himself, is far ahead of any letter that we have found, from our other children.

Vineland, N. J.
March 27th 1911.

Dear Mother.

I thought would write you a letter to let you know that I am well and hope you and Jessie are the same. I would like you to send me a pair of shoes size 7. And the April Cosmopolitan Magazine. Their was a Party at the Bridgman Cottage this month and the boys enjoyed it very much I said a recitation called Soldier's Rest and they had Cornet Solos and also some refreshments. On Friday evening the 24th of March their will be an entertainment at the hall and it will be given by Dr. Lane. They had moving pictures at the hall this month and they were very fine and they had some band selections which every one enjoyed very much. In February their was a Birthday party at the hall and it was very interesting. I am working in the Shoe Shop in the morning and do house work at the Bridgman Cottage. I hope you and Bessie will have a pleasant Easter. On Sunday afternoon of last week they had Assembly at the hall. This is all I have to say. Your loving son.

**CASE 263. ISAAC N.** 27 years old. Mentality 8. Has been here 8 years. American born, of American parents. Had whooping-cough at five years, measles at seven. The whooping-cough is supposed to be the cause of the condition.

Isaac came here in his twentieth year. At that time he is recorded as "obedient, recognizes color and form, memory and imitation fair, attention good; capable of useful occupation such as simple farm work; trustworthy, and truthful; has attended school seven years, could read, write and count. Enjoys taking part in games; learns but little in classes."

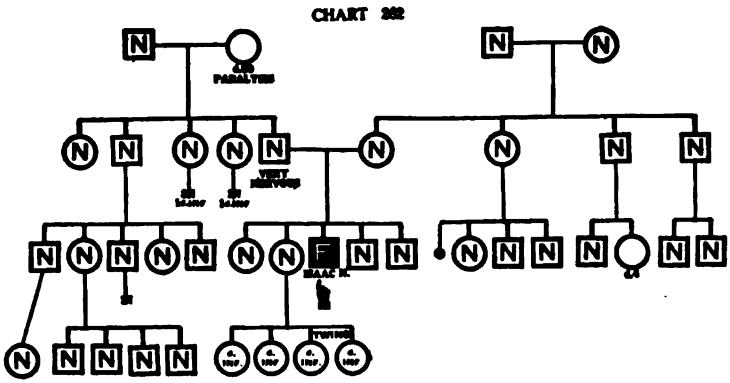

Three years later he was reading in the Third Reader, could spell many words, write neatly but very slowly. The following letter was well written but shows the immature development and imperfect understanding.

Vineland, N.J.
May 1st, 1910.

"My Dear Mother;

I thought I would write you a few lines I am well and I hope you are well as usual we had moving pictures here in the hall last wednesday night we are having very nice weather now last Sun day it rained and we was all ready to go to the hall and we got word there was not going to be no assembly and we had undress and put our clothes away will you please be out to see me the 18th, of may that will be on wednesday I received your postal card all right how are all the boys getting along all well I will close hope to hear from you soon,

I am respectfully
yours

Answer soon." Isaac.

The family is thoroly good and respectable. This is an unaccountable case unless we accept the paralysis of the grandfather, or the whooping-cough which, the physician says, was exception-

ally severe. The parents and all relatives are perfectly normal mentally. There is no history of anything at the time of birth or subsequently that can account for the condition.

**CASE 264. HENRY C.** 38 years old. Mentality 7. Has been here 20 years. American born, of German parents. Has had spasms, whooping-cough, scarlet fever at the age of twelve, typhomalarial fever at twenty.

Henry is a high grade imbecile. Was admitted at the age of 17; it is said that then he could do about first grade school work; had been in public school until the age of 14; has never gone any further in school work, but has become a good Institution helper. He is cheerful, quiet, obedient, willing, truthful but not always observant of property rights. He is good in taking care of some of the helpless boys.

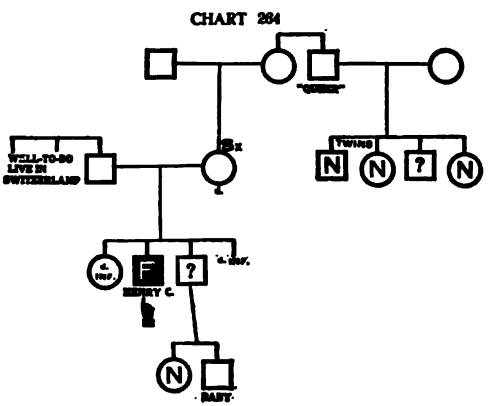


Very little could be learned about this family, consequently nothing can be determined as to whether this is an hereditary case or not. In the absence of other data we have accepted the scarlet fever as the cause.

**CASE 265. BALDWIN H.** 45 years old. Mentality 6. Has been here 2 years. American born; father American, mother English. Had spasms at five years, whooping-cough at four months, diphtheria at two years, scarlet fever at fifteen years. Also had infantile paralysis. Cause of the condition supposed to be " sickness."

Baldwin is partially paralyzed and cannot walk, but feeds himself; he did not talk until seven years old; cannot read; counts to twenty; is very happy at the Training School, enjoys

the company of the boys. Was necessarily much alone at home; likes to help mind the little ones. He is kind, affectionate and cheerful.

Baldwin's case is clearly due to accident. He comes from an excellent family as will be seen from the family chart. They

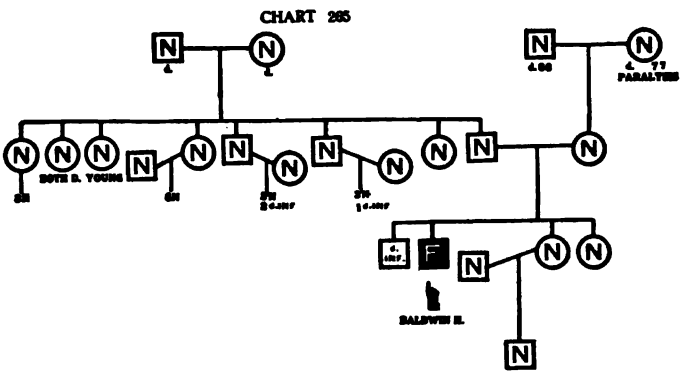


were not only normal in the usual sense but a highly respected family.

Baldwin's condition is assumed to be the result of the rupture of a blood vessel on the brain when he was a baby four months old. It happened in a paroxysm of whooping-cough; his eyes turned completely, showing only the whites; he bled from the eyes, nose, ears and mouth and the clot settled on his brain which partly paralyzed him. He was completely blind for a time and never walked.

**CASE 266. CHARLES T.** 28 years old. Mentality 6. Has been here 7 years. Born in Russia, of Russian parents. Had measles at four years, typhoid fever at six. The latter is supposed to be the cause of his mental defect. He came to this country when seven years old.

Charles is a typical good-natured "foolish" boy. He is of a cheerful and happy disposition, is not very high grade, is fond of music, can use tools a little, can do housework; is indolent,

sly and profane; has a fair memory, is active, quiet, obedient, quick, sensitive, affectionate, truthful, friendly. He is strong and healthy; has not changed in years.

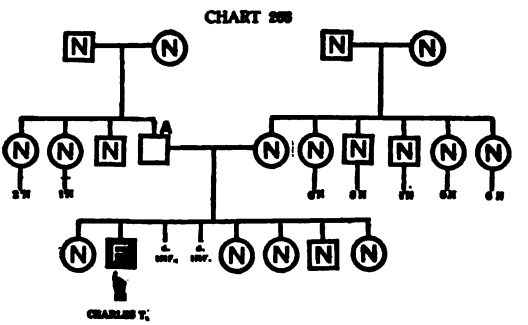

Charles' family seems to be thoroly normal; the father was indeed alcoholic but that is the only trouble we find. We are practically compelled to consider the typhoid fever as the cause of his defect. This occurred at about the time he should have begun his school work and that perhaps accounts for his never having learned anything in that line.

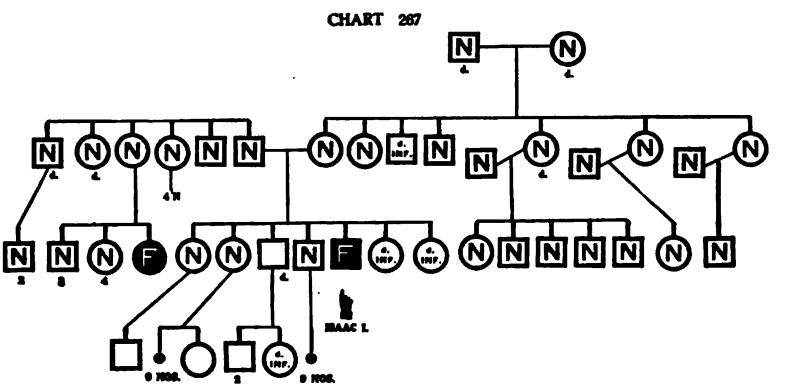


**CASE 267. ISAAC I.** 24 years old. Mentality 5. Has been here 13 years. American born, of English parentage. Had measles at the age of four, whooping-cough at five.

Isaac is what Oliver Wendell Holmes would call a "cheerful idiot," — except that he is technically an imbecile. He is good natured, full of fun — his kind; appreciative, and never so happy

as when he is going on an errand or doing something for somebody. He has quite a curious speech defect, not easily understood, feet are very much turned out and he walks very badly, nevertheless he can get over the ground quite rapidly. He never achieved anything in the three R's, farther than to print the letters G and E. His hands are very stiff; grasp is poor; has long since ceased to improve; can partly dress himself.

When Isaac was eleven months old he had convulsions, the doctor said, due to a whipping. He was very ill and was never right afterwards. He had seven convulsions in all, the last one when he was three years old. Altho this is a very unsatisfactory cause for the condition, we know of no other. The fact that a cousin is also feeble-minded does not justify us in concluding that there is a hereditary taint, since it is a much easier solution to conclude that in this case his condition was also due to accident.

The rest of the family so far as it is possible to trace them are normal, altho not by any means brilliant. They have had a great deal of sickness, the father having died of cancer of the stomach.

**CASE 268. DOTTIE I.** (" Billikens "). 9 years old. Mentality 5. Has been here 4 years. American born, of Irish parentage. Has had whooping-cough. Drunkenness of the parents is the assigned cause of the condition. Billikens' case has already been described, see *The Training School Bulletin* for November, 1912.

This is a child of drunken parents, and she herself was fed on whiskey, which may have been the cause of her defective development. She is very talkative but does not speak distinctly; can learn a short piece, is cheerful and active, not very obedient, quick and excitable, rather destructive, somewhat hard to manage, needing very much care; is very affectionate; has made steady improvement since coming to the School. Pineal gland extract seemed to have a valuable effect on her. She was very small for

her age when she arrived, and is still undersized. Evidently the whiskey has had a stunting effect upon the physical growth.

There is no evidence that this is a hereditary case; the grandparents are all in Ireland and nothing can be learned; the parents are probably normal altho both are alcoholic. It cannot be said, however, that the alcoholism of the parents caused the defect but rather that the alcohol that they administered to Dottie in infancy has produced the result in her, and the same result in an older sister.

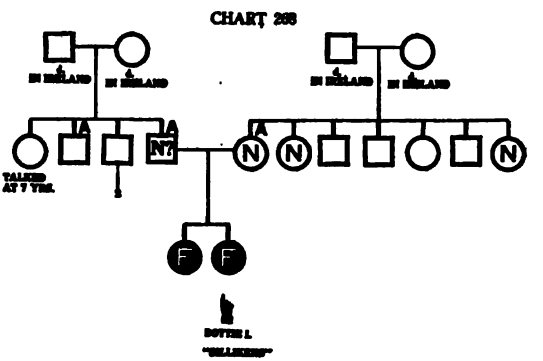


The important question arising in this case is whether, without the alcohol and under hygienic conditions, the defects can be overcome. Time alone can tell.

**CASE 269. CLARA I.** 20 years old. Mentality 3. Has been here 5 years. Born in Russia, of Russian parents. Had measles at the age of three years. Supposed cause of the condition, " a fall on the head."

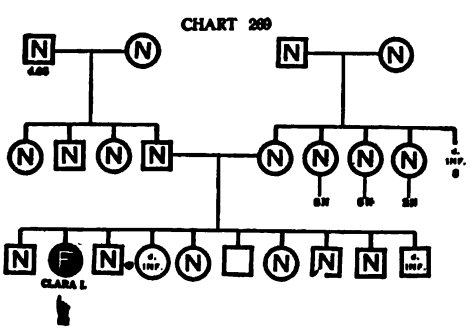


Clara is the second born in a family of ten. The family are Russian Jews who have been in this country several years. No others are defective, two died in infancy, several are very bright. The father and mother are apparently

normal, as are the other relatives. No evidence of unusually severe physical defect or disease can be found.

Clara is fairly low grade and deaf. No reason is given for the condition, except the fall received when eight weeks old. The child is very slightly trainable, able to do some errands about the house and simple housework.

**CASE 270. JENNIE K.** 9 years old. Mentality 3. Has been here 3 years. American born, mother colored. Had measles at the age of four.

Jennie is an attractive little colored girl. She came here when she was five years and nine months old. At that time she could do nothing; was just beginning to walk and could not talk. She had been discovered under very peculiar conditions, which indicate that she had been very seriously maltreated. One theory is that the mother hated her because she was so nearly white; at least she had been for a long time neglected, and probably drugged and brutally treated to prevent her from being discovered and recognized. When finally discovered and brought to the Training School she was in the condition as above indicated.

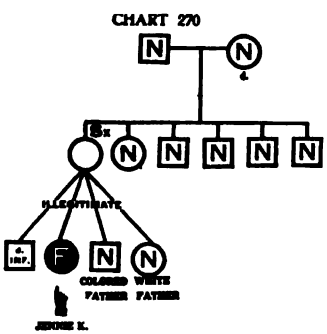


During the three years here, she has made great improvement. Not knowing at the time of her arrival anything about her history that would give us any clue as to her mental condition, we were much in doubt as to whether she was distinctly feeble-minded or only backward by deprivation. Her rapid improvement during the first months led us to hope that if her condition were due to her treatment, she had been rescued early enough to save her. At the present time, altho she has developed remarkably, it is probable, that if she was not naturally feeble-minded, the treatment she received has made her so irrep-

arably, and while she has perhaps not yet reached the limit of her mental development, it is more than doubtful if she will ever recover entirely. She will probably remain a feeble-minded child, altho possibly of high grade.

What little we have been able to learn of the family history would not indicate that this is a case of hereditary feeble-mindedness. The mother is not normal herself but certainly belongs to a normal colored family, rather above average intelligence. The mother is said to be the black sheep of the family and her behavior may be pure wickedness rather than defect.

Of the father no one knows anything. In all probability he was a white man, judging by the color of the child. The mother has other illegitimate children; the first one died in infancy and was colored, the one younger than Jennie is a little boy who is also colored, the very youngest, a little girl, is probably of a white father.

**CASE 271. MATTIE S.** 10 years old. Mentality 3. Has been here 2 years. Born in Russia, of Russian parents. Had whooping-cough at nine months, sore ears at seven years, measles at one year.

This is a very interesting little Hebrew child, very pretty, but of low grade; does very little in the kindergarten; plays and dances with the other children in the cottage; seems happy. She has had frequent screaming spells, late at night or early in the morning; had been in kindergarten two years before she came here. She has what seem like insane spells; has pulled out two teeth and pulled out her earrings while in one of them; beats her head; digs herself with her

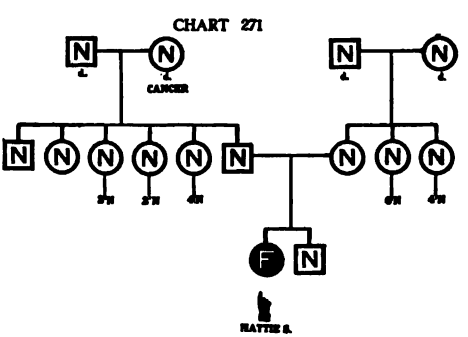

nails, screaming all the time. She is also a mild case of echolalia.

The family history seems thoroly good, the father and mother are certainly normal people, very pleasant and agreeable. From all accounts, all of their near relatives are also normal. They are certainly not in any sense a degenerate family. It is their belief that the condition resulted from measles which did not develop properly and the defect dated from that time.

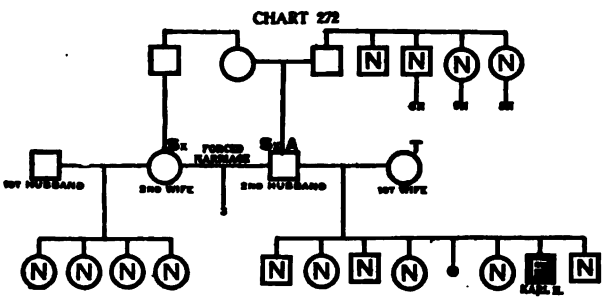


CASE 272. KARL H. 11 years old. Mentality 3. Has been here 6 years. American born, father American, mother Irish. Had convulsions when born; has spastic paralysis, has had measles and hemorrhage of the brain. Supposed cause, " cerebral apoplexy caused by infantile paralysis."

Karl is a helpless little fellow who cannot get out of his wheel-chair; has no strength in his limbs. He is pleasant and happy but does not talk.

We find nothing in the family history to account for the condition. The father is somewhat alcoholic but is a hard working man of rather low intellectual type but hardly to be considered feeble-minded.

CASE 273. IKY C. 11 years old. Mentality 2. Has been here 5 years. American born, of American parents. Had chorea. Was struck on the head by a gate, which is supposed to be the cause of the condition.

There is no doubt about the normality of this family. The only thing to account for this child's condition is an injury, a

CASE 272, KARL H., AGE 11. MENTALLY 3. (top)
CASE 274, HARVEY D., AGE 16. MENTALLY 1. (centre left)
CASE 278, DON D., AGE 24. MENTALLY 10. (centre right)

blow on the head received from a gate which swung against him and knocked him down. The physician thinks that the speech center was injured and that a clot of blood has formed on the

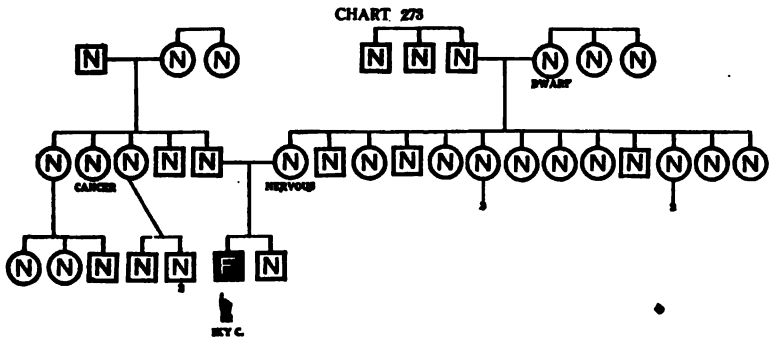


brain. He is so sure of this that he would risk an operation. Iky could say a few words, previous to this accident, but since then, has never talked; shows a little intelligence and activity; is excitable and very nervous.

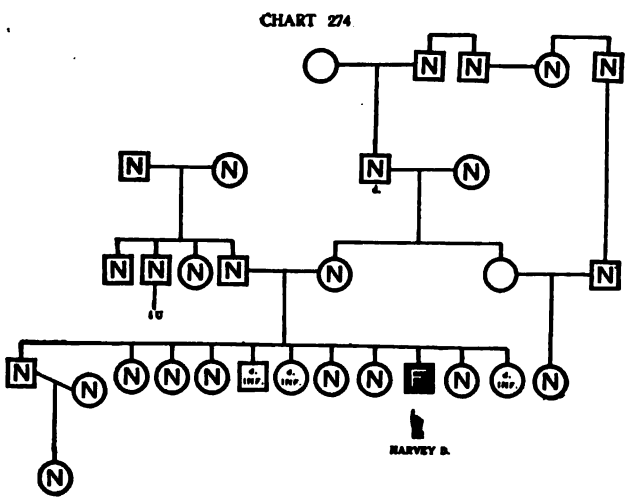


**CASE 274. HARVEY D.** 16 years old. Mentality 1. Has been here 9 years. American born, of American parents. Had convulsions between the ages of one and four years.

This is the ninth child in a family of eleven. It is a thoroly respectable family. All members, that have been found, are entirely normal. Our boy had a brother and two sisters that died young but the rest were normal. The only thing to account for our boy's condition is the convulsions which came on at the age of one year. He gradually retrograded from that time and has never recovered. He is of the lowest type, perfectly helpless and untrainable. Does nothing at all, has violent spells, pounds his head, screams and cries; runs away.

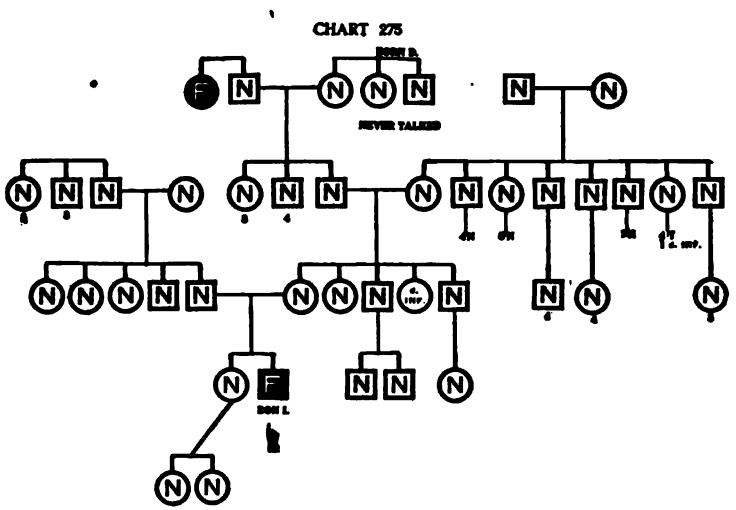


**CASE 275. DON I.** 17 years old. Mentality 1. Has been here 8 years. American born, of American parents. Had spasms and whooping-cough at the age of three. Supposed cause, " a fall on the head."

Don is an instance of the lowest type of idiot; he is restless, destructive and noisy. He can feed himself, but is quite as apt to eat with his fingers as with a spoon; has not gained perceptibly since coming to the Training School; has convulsions which are supposed to be due to the fall on the head. His mental defect was first noticed at about three and

a half which was six months after the fall. The parents are sure that the condition is due to the fall.

Without further details as to the character of the fall, we can pass no opinion as to whether that was likely to have been the cause of the condition, but at least a study of the family history reveals nothing that would indicate hereditary defect.

It is true that a maternal grand-aunt was considered feeble-minded and an uncle and aunt in the same generation were born deaf and never learned to talk. No other defect has ever been found and there was on each side a large family of highly respectable people. Of course, it might be said that there is a defective strain here that has lain dormant or recessive all these years. In the absence of all other data we accept the diagnosis of "due to accident."

**CASE 276. GERTIE S.** 18 years old. Mentality 1. Has been here 7 years. American born, of German parents. Had scarlet fever at the age of nine. Had a fall at one and a half years, which is supposed to be the cause of the trouble.

Gertie belongs to the lowest type of idiocy, practically without intelligence. There seems to be no traceable defect in the family and it seems necessary to accept the fall as the cause of the condition. The details of this are somewhat as follows:

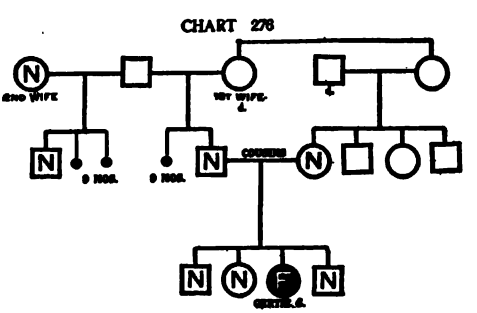


She was a bright child of nearly two years when she fell into a ditch in front of the house; she did not seem to be severely hurt, in fact did not cry, but within twelve hours had a severe convulsion. She recovered from this and played around during the day but the next morning the

spasms returned and for sixteen weeks the child had convulsions day and night. Two physicians were interviewed in regard to the case by our Field Worker and both declared it was marvelous that the child could live in such a condition, for the convulsions were almost continuous for days. She recovered to a slight degree but the parents soon realized that the child's mind was not normal. She did not grow nor develop to any extent, and at the age of four years was taken with scarlet fever and again her life was despaired of. When the fever left her she was unable to talk. She had learned a few words before the convulsions, but from that time has remained in practically the condition in which she is at present.

CASE 277. EPHRAIM X. Age 17 years. Mentality 10½. Has been here 4 years. American born, American parents. Had scarlet fever at the age of eight, measles at eleven; was a difficult birth. Instruments at delivery was the assigned cause of the trouble. The child also had meningitis at birth, has had cholera infantum and acute Bright's disease following the measles. This is a very severe case of ataxia.

Ephraim has very great difficulty in controlling his legs or hands, or even the organs of speech, so that he speaks slowly and with great effort; he has a very slow, poor gait and a good deal of trouble to make his hands do what he wishes. Under these circumstances it is not at all easy to determine his mental level. With all his handicaps he passes our tests at ten and a half; it is quite possible that he might do better. He has an excellent memory and wonderful persistence when trying to finish whatever he sets out to do. What he accom-

CHART 277

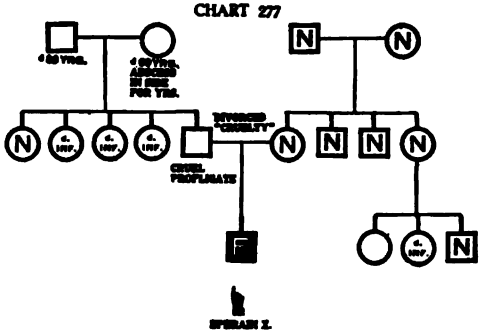

plishes in manual training is really amazing in view of his ataxic condition. He can make baskets; uses scissors and threads his needle; does very well in woodwork.

The writer has seen him walk a log from which he repeatedly fell off and just as repeatedly went back to the beginning and started over again; he persisted in this until he finally succeeded in going the entire length. He is cheerful, affectionate, very excitable; usually obedient, rather talkative, inclined to be mischievous; is naturally very nervous; is truthful. Ephraim is under size.

A glance at his family chart forces us to conclude that either the instruments or the meningitis must be responsible for Ephraim's mental, as well as his physical, condition. Of these, meningitis is a recognized cause of feeble-mindedness but the instruments might better account for the motor disturbances.

The mother's family are thoroly normal, high grade, intelligent people. Less is known of the father's family. He is reported to have been cruel, irresponsible and profligate, but there is no proof that this was due to feeble-mindedness.

**CASE 278. DON D.** 24 years old. Mentality 10. Has been here 11 years. American born, of Italian parents. Had brain fever at the age of four months which is supposed to be the cause of his condition.

This is a case of hydrocephalus. Upon admission at the age of fourteen, Don's head was noticeably large, so much so that he had difficulty in walking and supporting himself. He could read in the Second Reader, add, subtract, multiply and divide; knew color and form. He improved in these lines and became very good in spelling, can read in the Fourth

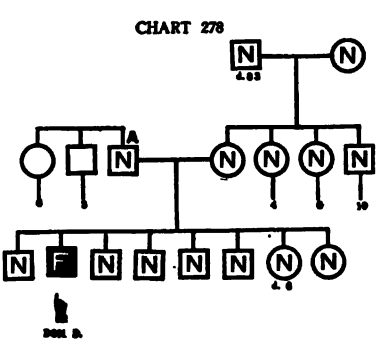

Reader and is fully up to his mental age in school work. He works in the laundry and is very good at various tasks about the Institution. He is, of late, somewhat irritable and very nervous. He belongs to a very good family and there is no sign of mental defect anywhere. The father was a drinking man, sometimes drinking to excess, but all of Don's brothers and sisters are entirely normal.

**CASE 279. OSCAR T.** 31 years old. Mentality 9. Has been here 13 years. American born, of American parents. Assigned cause, " cerebro-spinal meningitis." Had spasms while teething, whooping-cough at twelve years of age; the meningitis occurred when six years old.

Oscar has mentality enough to enable him to become a useful and valuable Institution helper, but a bad disposition has played havoc with his usefulness. How much the meningitis that he had in his youth has to do with his disposition, no one knows. He has made about the usual progress of a nine year old defective in the three R's. He writes a very fair letter as the following sample will show:

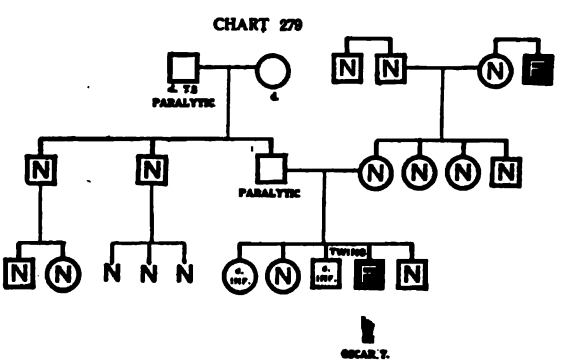


"My dear Mother
the reason I have not written to you
before this is because I have not had time to
write to you I was very sorry indeed to hear
you were sick again but I am glad to know you
are better. Miss Vernon wants to know when
you are going to send me the clothes she order-
ed last fall in October please send them as

soon as you possibley can for I need them very
much indeed as I am out of shoes they are all
worn out so will you please send me shoes very
soon is Mary and billy ever coming out to see me in
their bibe for I want them both very much indeed
how is my dear brother hope you are all well at
home and hoping to see early this year in June
From your loving son
Oscar"

He reads fairly well, in a somewhat jerky manner, as he talks, but can easily tell what he has read. He has a violent temper and gets very angry, and at such times he is not careful of his language. He does not care much for the company of other boys or adults, is better satisfied to be by himself, when he works constantly at spool knitting; can do good work in the carpenter shop and in the laundry, but his disposition often interferes with his success in this line. He is truthful, excitable, very sensitive, rather forgetful; has poor sight; as a rule he is easy to manage if one understands him.

At the first glance the family chart is a little suspicious since we see one defective individual besides Oscar. However, closer study of the family leads us to conclude that this is a meningitis case and probably not hereditary. The family are all normal and of high standing; there are some prominent people among them.

The mother was subject to sick headaches and the father died of paralysis; the other feeble-minded individual is an uncle of the mother; he died at forty-five but had been helpless all his life; this was supposed to be due to a fall, so that apparently we have here two accidental cases, rather than two that are connected in any hereditary line.

CASE 280. GEORGIANA L. 14 years old. Mentality 7. Has been here 5 years. American born; father American, mother English. Had convulsions at seven months; water on the brain at six months; whooping-cough at seven years. Has had cerebro-spinal meningitis. Meningitis is the assigned cause of the condition.

Georgiana is a very outspoken child, giving one the impression of much more intelligence than she really has. Upon admission she knew color but not form; has never been able to get beyond the simplest kindergarten work. Georgiana has had her troubles physically, and the hydrocephalus and meningitis

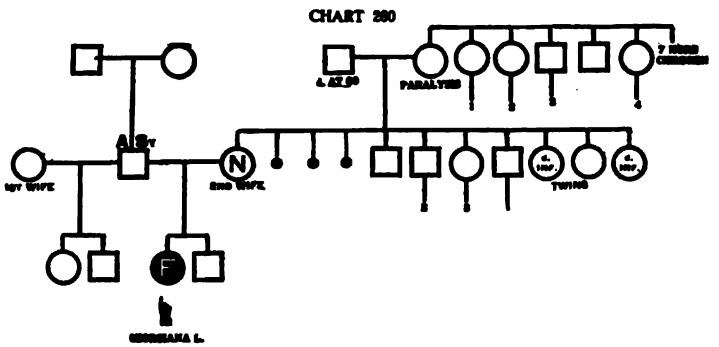


have left her a mental wreck. She is the older of two children, the younger died of rheumatic fever and dropsy. The father is alcoholic, syphilitic and possibly hydrocephalic.

CASE 281. KARL B. 31 years old. Mentality 5. Has been here 17 years. American born; father American, mother Irish. Instruments were used at his birth. He has had convulsions, whooping-cough, and brain fever at the age of one year; has eczema. His sickness is supposed to be the cause of his condition.

Karl was fourteen when he entered the School, did a little kindergarten work at first, learned to count to five and to spell "boy" and "cow"; never got much beyond this; has become a cottage helper in the coarsest kind of work; works about the kitchen, scrubs, pares potatoes and at the barn does a little sweeping.

This is clearly not an hereditary case; the mother's family are perfectly normal and are respectable people. The father was said to be abusive, good-looking and intelligent, but bad.

He was quite a heavy drinker. Karl's younger sibs are normal and two of them have normal children.

CHART 281

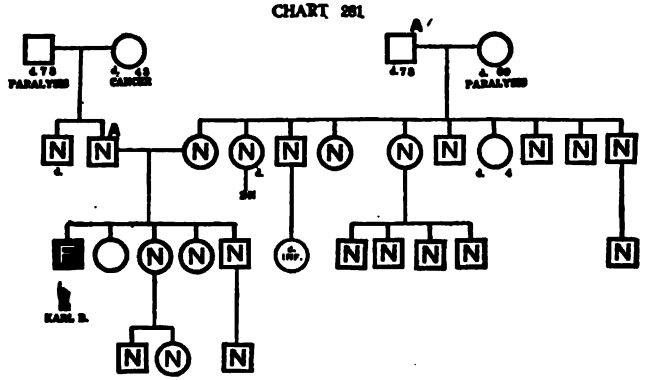

The mother says that the whooping-cough followed by marasmus which he had at eight months caused the complete change in him. The meningitis (brain fever) is probably the cause of the condition.

CHART 282

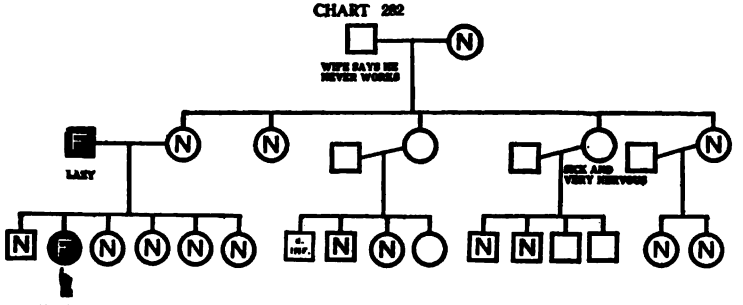

**CASE 282. LUELLA X.** 17 years old. Mentality 4. Has been here 8 years. American born, of Russian parents. Had epilepsy at five years, chorea, measles, brain fever at nine months. Brain fever is the assigned cause of the condition.

Luella speaks Russian but never talks unless it is necessary; cannot do an errand, likes music, is dangerous with fire; has

learned to sew on a button without help; helps with the smaller children; is very noisy; lately has learned to darn stockings.

Luella is a very attractive looking child, would never be suspected of being defective; has a smiling, pretty face. She had brain fever when nine months old. It was evidently a severe attack as ice bags were kept on her head for three months. She was then blind for two years and did not talk until she was six. This would be considered sufficient to account for her condition, but the father's defect points to heredity.

She is the second born in a family of six. This is a Russian family, and it is very difficult to judge of the mentality of the various people, especially the elders. Of the children, there is not much doubt. The remaining five are normal. The mother seems to be a normal woman and, as far as is known, her family are normal. The father is feeble-minded.

There seems a high probability that this is a case of hereditary feeble-mindedness, yet since we know the meningitis could account for Luella's condition and we do not know that the father's condition was not also due to accident, we have credited this to meningitis.

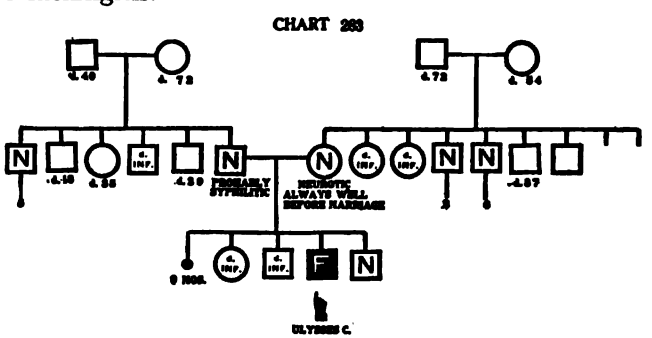


**CASE 283. ULYSSES C.** 18 years old. Mentality 3. Has been here 10 years. American born, of American parents. Had spinal meningitis followed by paralysis at the age of nine months; has had spasms. Was an instrumental delivery.

Ulysses is a very low grade boy, says a few words but can hardly be said to talk; acts insane at times, is a little inclined toward echolalia; talks to himself as tho he were another person, and strikes himself because he is disobedient.

The father is reported as being probably syphilitic. A younger brother of Ulysses is normal. The maternal grandfather is said to have died at forty of blood-poisoning. Beyond this we have been unable to get any satisfactory data. It is clearly a meningitis case.

**CASE 284. FRED K.** 11 years old. Mentality 3. Has been here 3 years. American born, of American parents. Has had brain fever which is supposed to be the cause of his defect; also had spasms when two weeks old, and eczema.

This is a very low grade imbecile who has not changed, except physically, since his admission. Apparently he is at a decided standstill; cannot dress nor undress himself, understands a command but does not recognize color or form; is very disobedient and naughty, kicks and strikes; has rather regular features and would be a good-looking boy if there were any mind to shine out thru his eyes; he looks dazed and stupid.

Fred's is a very interesting case when we come to the family history; (see Chart 255, page 370), not only because he is a cousin of the Mongolian in Case 255 but because on the father's side there is an interesting condition. The father himself, altho probably normal, is nevertheless exceedingly dull. His father and mother were rather low grade people, the father being alcoholic and syphilitic, which disease the mother also contracted. The family physician considers that there is sufficient defect on the father's side alone to account for the children's condition; besides being alcoholic the grandfather was promiscuous in his habits, as would indeed be indicated by the venereal disease.

Fred's younger brother is also considered defective by many, but according to the Binet test he did not at the time examined

show defect; it is entirely possible that it may appear later and an effort will be made to examine him.

In view of all of the facts, including the brain fever, which probably means cerebral meningitis, it is not quite safe to consider this a case of hereditary defect. Such a thing is of course possible but not provable from our data. Fred gives a positive Wassermann reaction.

For later report, see page 31.

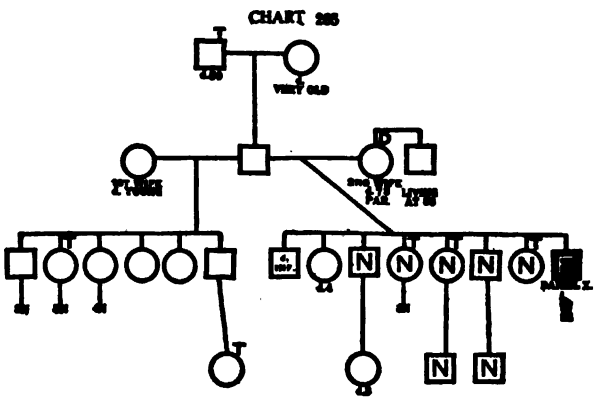


**CASE 285. DANIEL X.** 45 years old. Mentality 3. Has been here 21 years. American born, of American parents. Had measles, whooping-cough, brain fever at the age of two, pneumonia, cholera infantum at two. The cholera infantum and congestion of the brain are supposed to be the cause of his condition.

When admitted at the age of twenty-four Daniel's speech was imperfect; he could do errands and liked to draw animals and boats most of the time. He has never been very trainable, learned to sweep and dust a little, and to do some other simple housework.

The family has the appearance of being a normal one. It is highly probable that the meningitis is the cause of the condition.

**CASE 286. SYLVANUS C.** 19 years old. Mentality 2. Has been here 9 years. American born, of American parents. Has had epileptic convulsions and meningitis. Instrumental delivery.

Sylvanus is a low grade case of the very excitable type. He is very active and quarrelsome, is said to take advantage of any one who shows fear of him.

The family is thoroly respectable and seems clear of anything that could account for either the physical or mental condition.

This seems to be a perfectly clear case of mental defect resulting from meningitis and scarlet fever. There is no hereditary

CHART 286

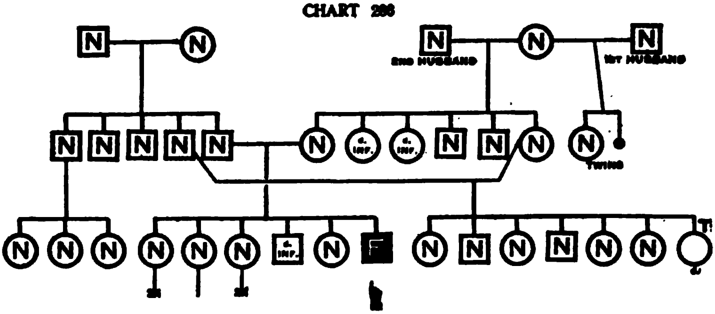


defect in the family. The grandparents were all normal and died of old age. The mother and father are perfectly normal and healthy as are uncles, aunts and cousins. Sylvanus had what was called scarlet rash at 13 months, considered to be from teething, but soon after, a sister was taken down with scarlet fever. Then it was thought that our boy had had scarlet fever and taken cold. He was never right afterwards. He had a convulsion which lasted eleven hours and the next day had twenty-six in succession; was paralyzed after that, and has never developed.

**CASE 287. BESSIE D.** 21 years old. Mentality 2. Has been here 15 years. American born, of American parents. Had meningitis at six months, chicken-pox at nine years. Meningitis is supposed to be the cause. Wassermann reaction is positive.

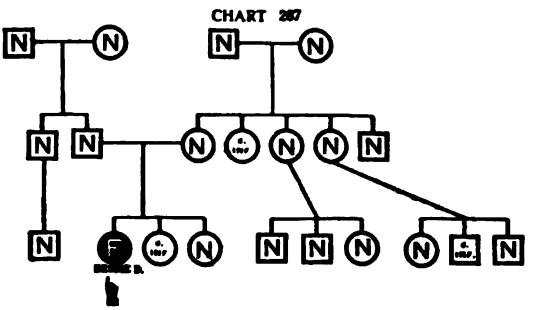


Bessie has rather a normal physique but cannot care for herself, does not talk except to say two or three words; does no work, is practically untrainable.

The condition is undoubtedly caused by spinal meningitis and the family history shows no other defect or even serious physical disability.

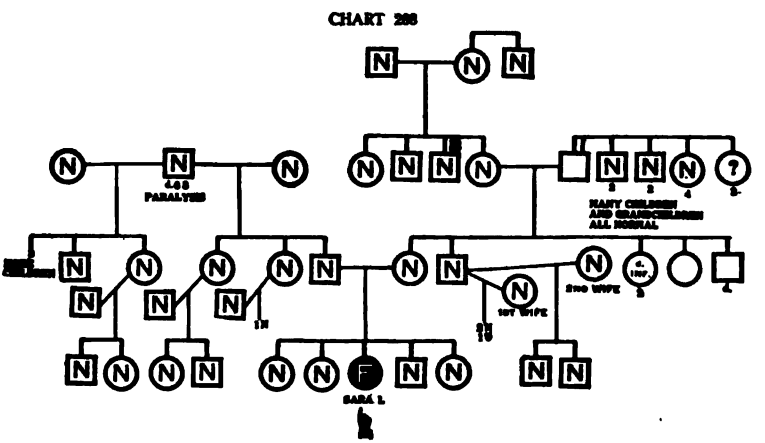


**CASE 288. SARA I.** 19 years old. Mentality 2. Has been here 11 years. American born, of American parents. Had spasms at two years. Cerebro-spinal meningitis and infantile paralysis also at two; has had measles and whooping-cough. Supposed cause, "a fall at twenty months."

A thoroly normal family. It is true the maternal grandfather was insane late in life, but there does not seem to be sufficient evidence that his insanity had any effect on his posterity, altho one grandson is said to be dull. It is quite possible that his

CASE 288, SARA I., AGE 19. MENTALLY 2.
CASE 298, NANCY H., AGE 17. MENTALLY 3.
CASE 299, HAROLD T., AGE 18. MENTALLY 2.

insanity was connected with a very serious fall he had from a high building.

On the other hand, Sara seems to have had experiences which are sufficient to account for her condition. Her relatives insist that she was perfectly normal as a baby, but when about 18 months old, as her mother was carrying her down stairs, she stumbled and fell striking the child's forehead on every step. The collar bone was also broken and the muscles torn from the bone. Later the child fell off a high trunk striking her head on the floor. Very soon after this, she was taken with a raging fever and convulsions that lasted quite a time and came in rapid succession. All night the child lay unconscious, having violent inward spasms. The doctor did not think that she could survive until morning, but a change came and the fever subsided. The convulsions ceased and she began slowly to recover. After this she had to learn again to walk but she never afterward talked.

It is probably safest to consider this a case of meningitis. It is not known whether such a fall could cause feeble-mindedness, while we do know that meningitis does.

She is to-day, a pleasant, smiling child of 17, but with no mentality, entirely untrainable and without any ability to work or care for herself.

**CASE 289. DAVID N.** 12 years old. Mentality 2. Has been here 6 years. American born, of American parents. Had measles at the age of four, convulsions at one and a half. Assigned cause, " acute sickness, probably meningitis."

David's case is a typical one; he is an epileptic and has all the characteristics of a child of his mentality, that is, the idiot grade. Does not talk and is thoroly untrainable. He is small of stature altho of about average weight. He is rather a nice looking little chap in spite of all his disabilities. His attendant reports the following — "he is very fond of music, he is choice in the kind, too. When a record is played that he

does not like, he cries and stutters but when he does like it, laughs and claps his hands." He is very sensitive and likes to be noticed.

After a study of the family chart we are led to conclude that

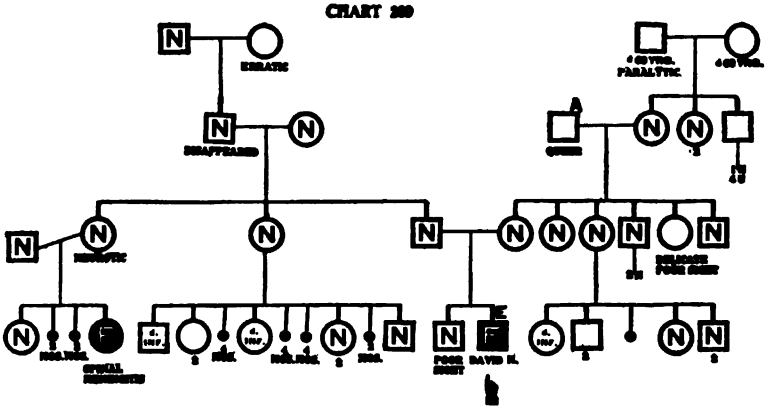

this is a case of acquired defect, the meningitis or some of the other early troubles undoubtedly being the cause.

A cousin on the father's side is indeed feeble-minded, but this is also a case of meningitis.

**CASE 290. HENRY U.** 16 years old. Mentality 2. Has been here 2 years. American born, of American parents. Instruments were used at birth. Child had measles at the age of four; probably had cerebro-spinal meningitis at two and a half.

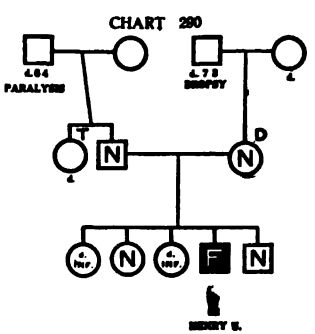

This is a low grade child concerning whose case little satisfaction can be gathered. He commenced to talk at two years but lost his speech at four. Had chills and fever when two and a half years, which might have been meningitis as he had slight convulsions. From three to eight years he had nervous excitability.

In the Training School he has accomplished nothing, likes to play with blocks and look at books but is not improving, is not even a clean child.

The family history is too meager to give us anything satisfactory as to the cause.

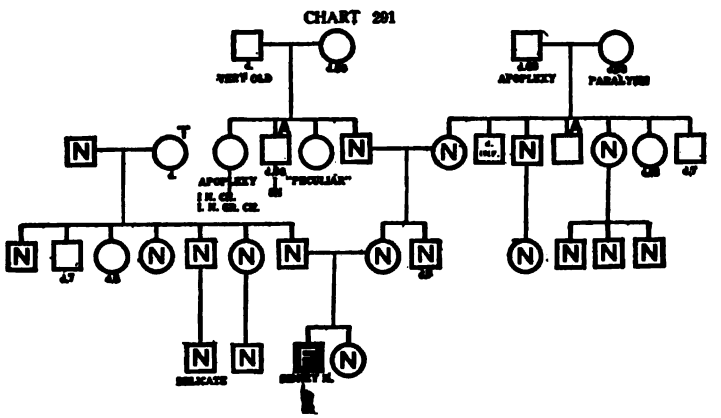


**CASE 291. SIDNEY M.** 12 years old. Mentality 1. Has been here 3 years.

Sidney is a low grade case with practically no intelligence. He cannot care for himself, walks with much effort altho he seems to be improving a little in that direction.

The family chart shows an array of normal people and we learn that Sidney was a victim of cerebral meningitis at the age of fourteen months, also had spasms; had measles at the age of eight years. The meningitis is without doubt the cause of the condition.

**CASE 292. NATHAN S.** 15 years old. Mentality 1. Has been here 7 years. American born, of Austrian parents. He had measles at two years and brain disease from a fall at thirteen months, which is supposed to be the cause of the condition.

This is a very difficult family about which to get accurate data. All the members seem normal but they are all foreigners

and of rather low intelligence, altho seemingly not low enough to be called feeble-minded. There is much intermarriage. The parents were second cousins and the grandparents were also

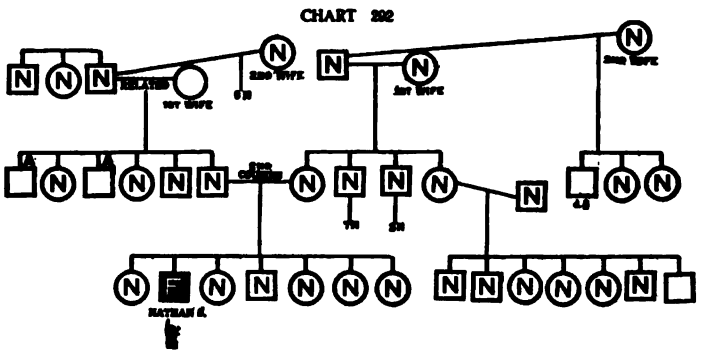


related. Our boy is of the lowest grade, does not talk, does not play, cannot dress nor undress himself; is sober, silent, cranky, restless, slow and destructive.

It seems probable that this is a meningitis case. He gives a positive reaction in the Wassermann test.

## NO ASSIGNABLE CAUSE

The following 8 cases, Nos. 293 to 300, compose the No Cause Group. In spite of the fact that our records are very complete, there is nothing in the history of these cases that would usually be accepted as an adequate cause.

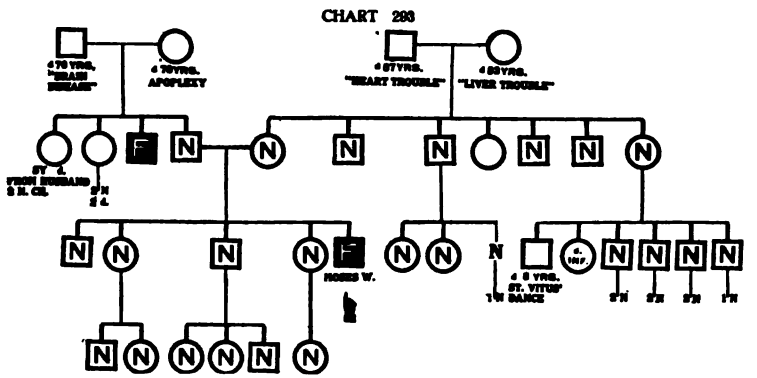


**CASE 293. MOSES W.** 24 years old. Mentality 8. Has been here 7 years. American born of American parents. Had diphtheria at the age of two, measles at twelve, scarlet fever at eleven, whooping-cough at ten and convulsions at thirteen. Assigned cause of the condition, " the worry of the mother."

Moses is a moron, but not of the highest grade; has a somewhat dull look, his mind works very slowly, he does not seem interested, is rather indolent; has learned about the usual amount of the three R's; writes a very bad letter in penmanship, spelling and expression.

His chief work is of the coarser, heavier sort, housework, shoe-shop, laundry and the like. He is a cheerful boy, quiet and obedient, truthful and honest, somewhat sensitive, very affectionate; is very faithful and tries hard to do whatever he can do. The following is a sample of one of his letters and a program that he made up for Morning Assembly at the Training School—

Vineland, N.J.
June 15, 1910

Dear mother I hope
you are well
How did you in
joy your anual
meetin last week
I hope you in
joyed it very much
we had a nice
time to day I got
some flowers to day
I hope you are all
well at hom hope
to here from you
soon your
Loving son

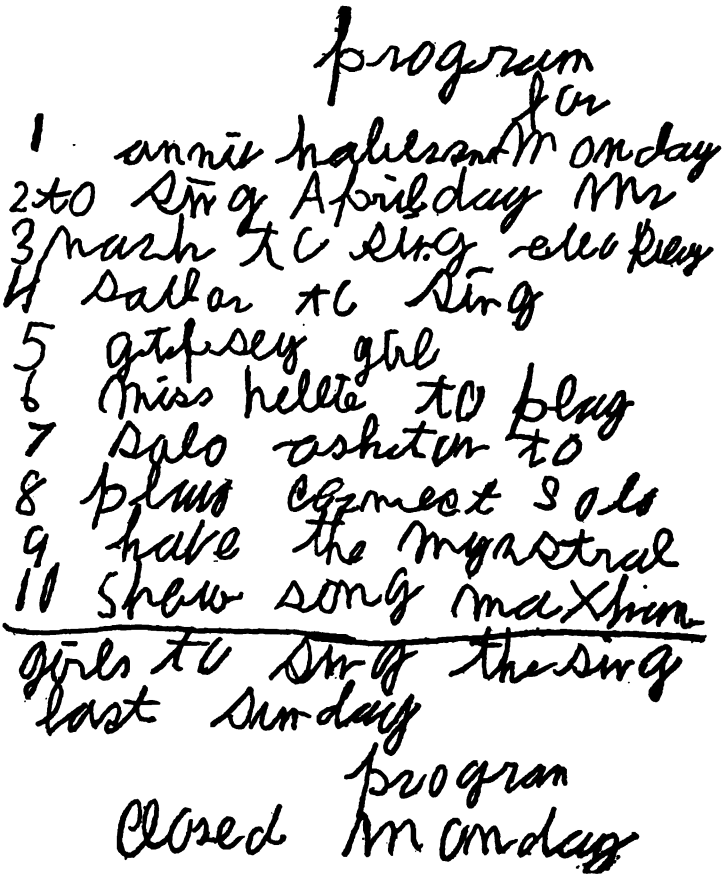

One would need to know about the Assembly to understand his program. He seems to have ten numbers but as a matter of fact the figures only designate the lines and have no connection with his subjects.

Moses' family history raises some questions that are unanswerable. The general appearance of it would seem to indicate good stock, indeed they are thoroly respectable and good people. A paternal uncle, however, was a defective of very low grade. He never learned to talk but was harmless and lived alone with his mother. If we were to count this as indicative of hereditary taint we must conclude that the taint is decidedly recessive since it very seldom appears. To prove this would require much more data than we have from earlier generations. The probability is much greater that this uncle was also a case of accidental defect and that here we are dealing not with heredity, but with the coincidence of two accidental cases of mental defectiveness in the same family.

**CASE 294. GEORGE C.** 32 years old. Mentality 2. Has been here 24 years. American born; father German, mother American. Had spasms at two years, measles and whooping-cough.

George is another case belonging to the group of unsolved problems. The family is normal and intelligent; and nothing is known to account for George's condition.

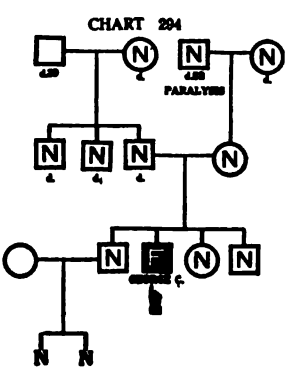


The maternal grandfather died of paralysis at the age of fifty-two; this is the only thing that approaches brain trouble of any kind so far as we can learn.

George is of low grade, does not talk, cannot even unbutton his clothing; is dangerous with fire; will eat garbage; is bad tempered. Since admission he

has improved a little; at one time knew his right and left hand and could sew on a button; he even went to school, but he never got far; had cleanly habits and is said to be very fond of good clothing. Now he does no work, needs constant care and supervision.

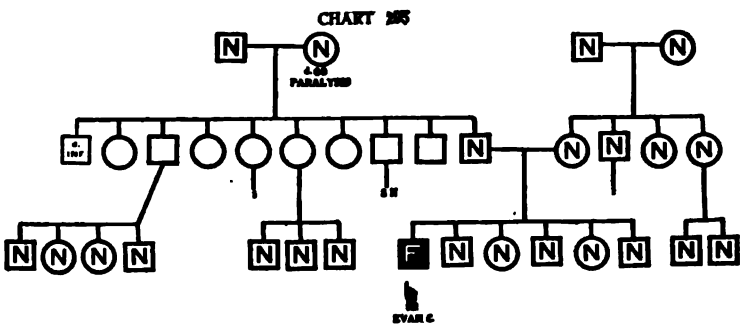

**CASE 295. EVAN C.** 15 years old. Mentality 2. Has been here 7 years. American born, of American parents. Condition is said to be congenital.

This is a low grade case with nothing whatever to account for it. Five brothers and sisters are normal; parents, aunts, uncles and grandparents are also normal. Our boy is perfectly helpless, neither dresses nor undresses himself, cannot talk, cannot do anything. He has to be fed, eats stones, buttons, etc. unless watched; plays with a string; no sense of cleanliness; no hope of improvement.

The family attribute the condition to a nervous shock received by the mother in about the third month of pregnancy. She visited a minstrel show and suddenly became ill and had to be taken out. When the baby was born, he showed plainly that he was without intelligence and early began making contortions and grimaces which seem to the parents similar to those that had sickened the mother on that particular occasion.

**CASE 296. DOROTHY N.** 16 years old. Mentality 2. Has been here 10 years. American born, of American parentage.

Dorothy is short and stout with features that would not be uncomely if there were a mind to direct them, but she is low grade and untrainable. She went to school three hours a day for five years and in that time learned only how to sew around a circle and color inside and mark the lines; she does practically nothing and is a harmless, useless, innocent child. She leads a perfectly colorless life. The same term would apply to her family; they are neither conspicuously dull nor bright nor interesting in any way, so that there is nothing worthy of note in regard to them. They seem to be slow and mediocre but normal.

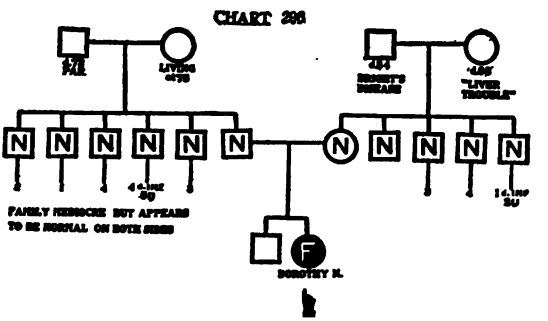


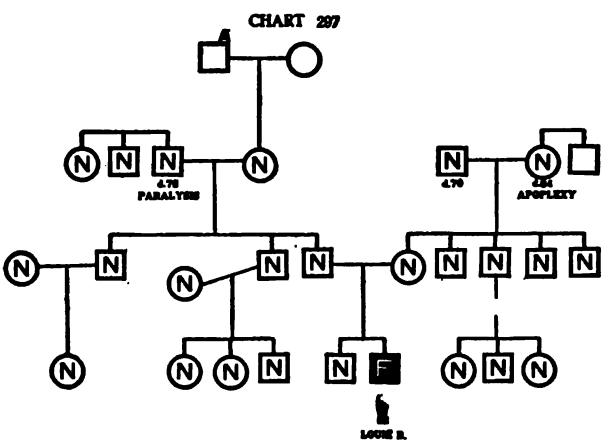


**CASE 297. LOUIS B.** 10 years old. Mentality 1. Has been here 3 years. American born, of American parents. Had whooping-cough at five months. Condition is said to be congenital.

This child is of a highly respectable family, all the members being normal. The paternal grandfather died of paralysis at seventy-five. His wife's father was alcoholic. The maternal grandmother died of apoplexy at sixty-four. There is no theory to account for our child's condition. He is low grade, does not talk, and appears not to hear. He makes a queer sucking noise with his tongue. Is undersized; is very nervous. There are some indications that he may be of the cretinoid type.

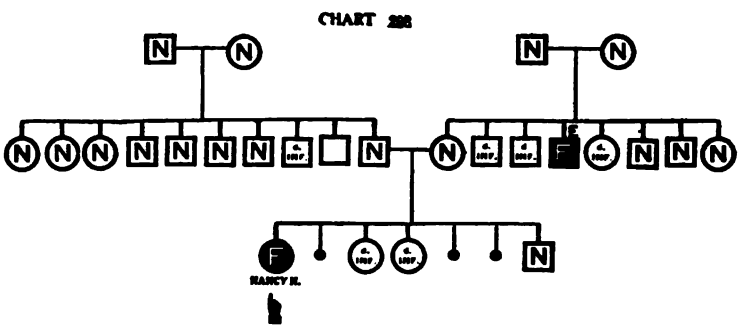


**CASE 298. NANCY H.** 17 years old. Mentality 3. Has been here 7 years. American born; father American, mother unknown. Colored. Supposed cause, " marasmus " which she had at the age of two months.

Nancy is a low grade child, utterly silly and useless and untrainable. There is no indication that this is a case of heredity. The father and mother are perfectly normal colored people of the better sort. It is true the mother has only one living child besides Nancy, but she is normal. The mother was very ill before Nancy was born and it seems likely that there was some abnormal condition at that time, that caused the defect. It is true that the mother's brother is feeble-minded, but he is also epileptic, the epilepsy dating from the age of three, so that it is entirely possible that his mental defect is a result of the epilepsy and not to be considered as itself a hereditary defect.

**CASE 299. HAROLD T.** 18 years old. Mentality 2. Has been here 10 years. American born, of American parents. Had diphtheria at the age of three, measles at four, had partial paralysis from waist down. Condition said to be congenital.

There is nothing to indicate any bad heredity in this family. Both grandfathers were alcoholic, both grandmothers are living at advanced years. The parents, aunts, uncles and cousins are thoroly normal, and rather unusually healthy. Our boy is

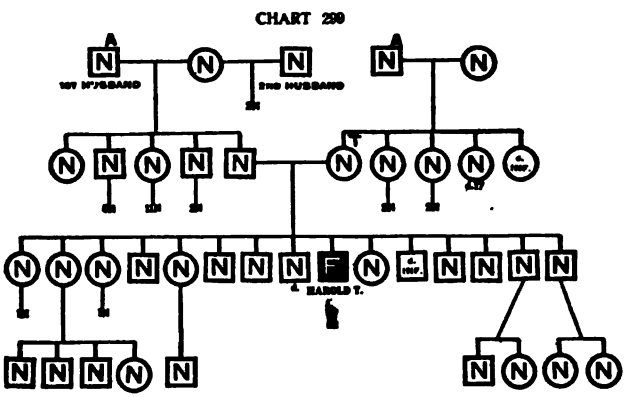


one of a large family, the only defective one. An older and a younger brother died young, of abscess of the brain. There is nothing to account for this boy's condition. He is low grade, does not talk; cannot dress nor undress himself, in fact cannot do anything; plays with strings, tears his clothes to make strings. Is clean, indifferent, not capable of any training.

**CASE 300. EUNICE G.** 31 years old. Mentality 2. Has been here 21 years. American born, of American parents. Had mumps at two years, whooping-cough at four; had convulsions after birth and during dentition; deficient animation at birth.

Eunice is a low grade child, untrainable and does practically nothing.

There is nothing to account for this case; she belongs to a good family and there is no history of disease that would be a

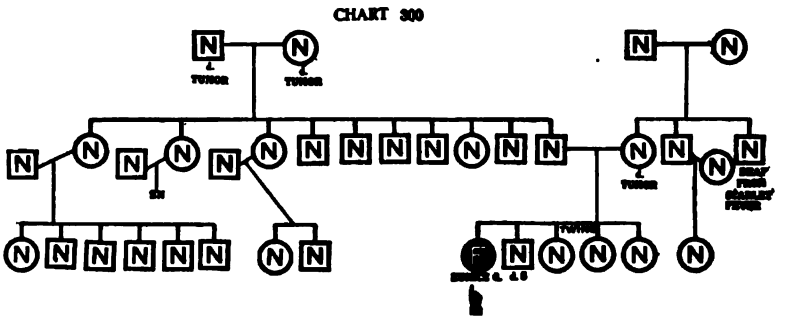


probable cause anywhere along the line. In the present state of our knowledge such a case absolutely baffles us.

## UNCLASSIFIED

The following 27 cases, Nos. 301 to 327, compose the group of Unclassified Cases. While in some instances there is more or less probability that the case belongs in one of our preceding groups, the data are so meager that we have not felt justified in making the classification.

CHART 301

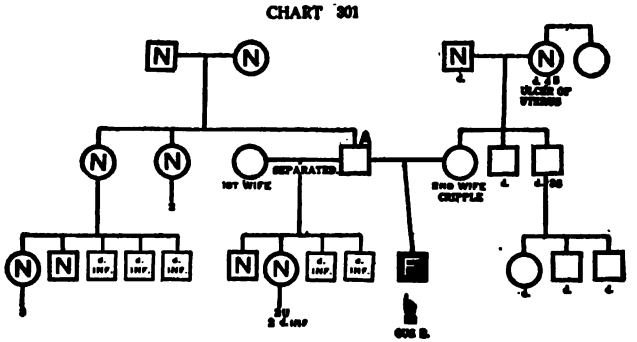

**CASE 301. GUS B.** 16 years old (colored). Mentality 8. Has been here 6 years. American born, father and mother African-Americans. Had whooping-cough at the age of seven years. Condition said to have been partly congenital and partly due to lack of training.

Gus is a rather typical colored boy. When admitted at the age of ten, he spoke rapidly but intelligibly; had been in public school four years; could not write; could count a little and knew his alphabet. After five years the record is, "has worked hard in English and has improved in all lines of it; can add most combinations to ten but cannot subtract all of them; does well in knitting, is a good all-around boy." Is a cheerful, active, good-tempered, mischievous fellow, capable of a good deal of work and can do many kinds very well. Has clearly reached his limit in book work and will settle down like the rest, to be a good Institution helper.

There seems to be no feeble-mindedness in this family, nor anything that would be considered an adequate cause for Gus's condition, unless the whooping-cough is to be accepted. The

father was alcoholic, but late in life. The father and mother both were good, hard-working people and certainly would be considered normal by most people.

There are many factors in the problem of the colored race. It is useless to speculate on this single instance of feeble-mindedness.

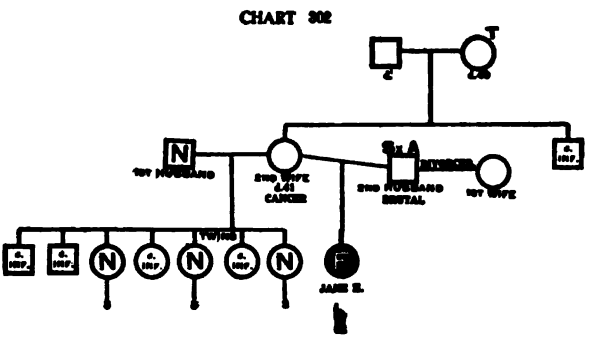


CASE 302. JANE H. 36 years old. Mentality 8. Has been here 23 years. American born, of American parents. Assigned cause, " a fall on the head at the age of three and a half." Child had diphtheria at seven years, measles at nine, whooping-cough at ten.

Jane was fourteen years old when she came to the Training School, could wash dishes and do similar work but was not very neat; could not be trusted; was untruthful, sly and passionate; generally obedient. Her head was noticeably small; she did not talk plainly; could read and count a little. She has made considerable improvement since coming here, now does fairly good needle-work and embroidery; works in the laundry and seems capable of learning a new occupation and of more improvement; has, however, very bad habits.

A glance at the chart shows that we know very little, positively, about her family; it seems fairly probable that her mother was a normal woman since she had nothing but normal children by her first husband. Jane's father was evidently a bad man, immoral and alcoholic; he was also brutal; was divorced from

CASE 302, JANE H., AGE 36. MENTALLY 8.
CASE 300, EUNICE G., AGE 31. MENTALLY 2.
CASE 304, GERTIE G., AGE 19. MENTALLY 7.

his first wife. Whether Jane's condition is hereditary thru him or due to congenital condition as the result of his brutality, it is impossible to say. Either explanation might do. Jane learned to read in the Third Reader but never got beyond that.

**CASE 303. OSCAR N.** 29 years old. Mentality 8. Has been here 12 years. American born, of American parents. Had spasms when a baby; had paralysis; measles at one year, scarlet fever at two years, whooping-cough at three years. Condition supposed to be the result of sickness.

Oscar came here at the age of seventeen; he was large for his age, took care of himself, could not read, could count to 100; could not add nor subtract; could not recognize color or form; had been in public school for two years. Under training here he learned to read and write better, and to do number work, and to write a very nice letter. Oscar improved very greatly in work and disposition; has recently been paroled and is earning his living under the supervision of a brother.

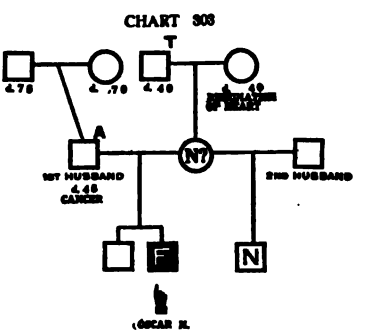


So little could be learned of Oscar's family that it is impossible to classify this as an hereditary case. The mother is of low intelligence, but whether she would be classed as feeble-minded it is difficult to say. The father was alcoholic and had a bad disposition; more than that, could not be learned about him.

**CASE 304. GERTIE G.** 19 years old. Mentality 7. Has been here 9 years. American born; father American, mother English. Had measles at two years, whooping-cough at three, convulsions at six months. Supposed cause, " the worry of the mother at the death of her mother-in-law."

Gertie is a high grade imbecile and has had convulsions, sometimes as high as fifteen a day. Commenced to walk at the age of four and talked at six.

Since she has been here she has improved quite a little in habits, has learned to help at easy manual tasks and can take care of little children very nicely under direction.

So far as it has been traced, this is not a case of hereditary feeble-mindedness. There is some doubt about the mother's

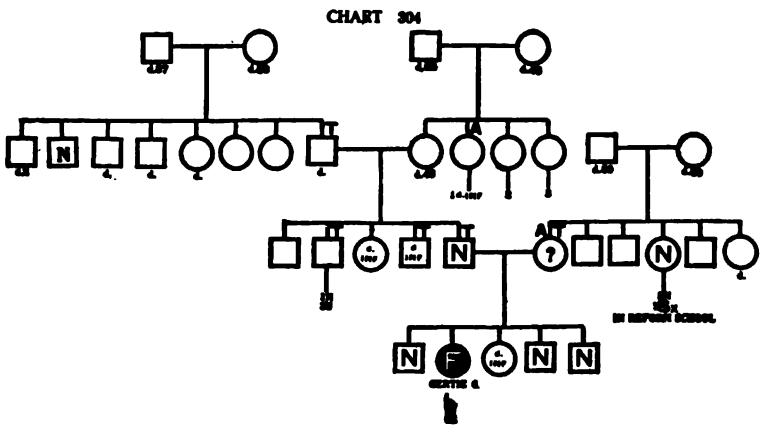


mental condition, her alcoholism making it difficult to determine her natural intelligence. There is tuberculosis on the paternal side and a maternal cousin of Gertie's is sexually immoral and has been in the Reform School for Girls.

**CASE 305. NANCY L.** 25 years old. Mentality 7. Has been here 14 years. American born, nationality of parents unknown. Has had whooping-cough and had typhoid fever at the age of fourteen.

Nancy is a cheerful, affectionate girl, very active and obedient, truthful, somewhat timid. When she came here at the age of eleven she was under size, and is yet. She went up and down stairs very clumsily; speech was imperfect, knew part of the alphabet; could count to nineteen; could write her name; did simple housework; was considered destructive and sulky; had been in school a long time but had only learned to count and know her letters.

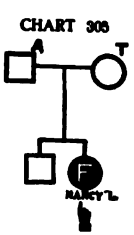

Nothing of note was accomplished in her training in the three R's. She learned to sew, and became a good cottage helper. Her speech remains about the same as when admitted. She became very helpful and useful especially with the little children. At present she works with the dressmaker half the day and in the cottage the rest of the time.

Nancy and an older brother were left by their father with a family. He paid their board for a short time and then deserted them. He was alcoholic, the mother was tuberculous. We have no evidence of their mental condition nor of that of the older brother except what may be inferred from the fact that he ran away from a good home, where his foster parents were prepared to put him into business and take care of him. The children report that the father killed the mother, but there is no evidence of this, other than their report.

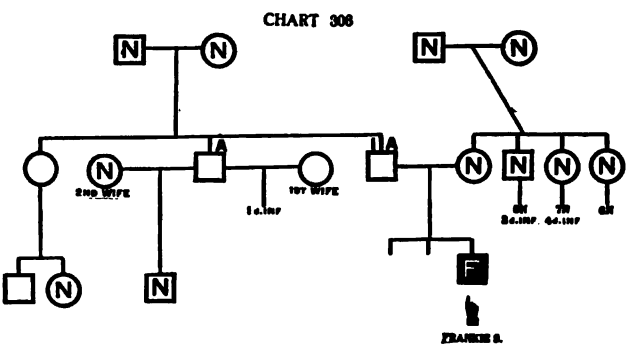


**CASE 306. FRANKIE S.** 18 years old. Mentality 6. Has been here 5 years. American born, of American parents. Had whooping-cough at the age of four years. Father's alcoholic habits supposed to be the cause. The condition is said to be congenital.

Frankie is a middle grade imbecile, not very trainable; has spinal curvature.

The mother's family seems to be thoroly normal. The father is alcoholic and insane, but when not alcoholic is an agreeable,

well-mannered, well-bred man. He is said to be brutal and ill treats the mother. His condition would generally be accepted as the cause of the child's defect, but whether this is hereditary or congenital it is difficult to say.

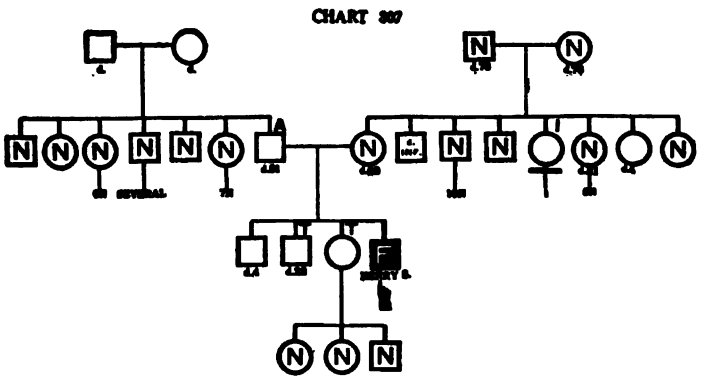

**CASE 307. HENRY S.** 30 years old. Mentality 2. Has been here 15 years. American born, of Irish parents. Had measles and whooping-cough. Condition is said to be congenital.

Henry is low grade, altho he understands a command, recognizes color and is fond of music. He is slow and not very trainable; he has probably been somewhat brighter than he is now, because he has been able to braid a mat with three strands and do some housework, while now he is only able to feed himself.

We have found a number of normal people in this family and no defectives, altho there are several who are undetermined and of course it is entirely possible that a defect may have existed in them. An aunt of Henry's was insane, and Henry's father was alcoholic and died of Bright's disease. Beyond that we have nothing to point to.

The other members of this family are mostly well-to-do respectable people who do not associate much with their humble relatives.

CASE 305, NANCY L., AGE 25. MENTALLY 7.
CASE 307, HENRY S., AGE 30. MENTALLY 2.
CASE 309, GEORGE V., AGE 19. MENTALLY 5.

CHART 308

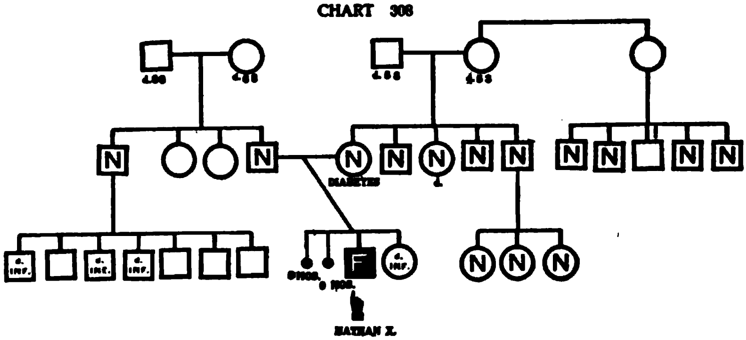


**CASE 308. NATHAN X.** 19 years old. Mentality 8. Has been here 4 years. American born; father German, mother English. Had measles at the age of four. Nathan was a seven months child.

He had been in public school five years and private school three years, before he came here. He knew color and form, could read and write, add and subtract, but could not multiply or divide.

Here, he progressed a little; was able to read in the Third Reader, could write a fair hand; could do very easy problems in the four fundamental operations in arithmetic. He was, however, a poor worker and an unsatisfactory boy generally. He tried to run away several times and finally succeeded.

There seems to be nothing in the family history to adequately account for Nathan's condition. The mother had diabetes and a cousin of hers was insane. The family physician believes that the father is syphilitic. Nathan is now in the Hospital for the Insane.

**CASE 309. GEORGE U.** 19 years old. Mentality 5. Has been here 9 years. American born, of German parents. Had whooping-cough at the age of eight, chicken-pox the same year, measles at nine. Condition is said to be congenital.

George is a mischievous looking boy, active and affectionate, forgetful, good tempered, somewhat destructive; very dull.

He has not been able to accomplish anything except the simplest kind of tasks: works about the house, runs errands, scrubs floors, dusts; is not always easy to manage.

There is no evidence that the condition is hereditary in this family, altho it is possible. We have not been able to determine the condition of many of the members.

The father was sexually immoral, deserted his family, running away with another woman. The mother and one sister had

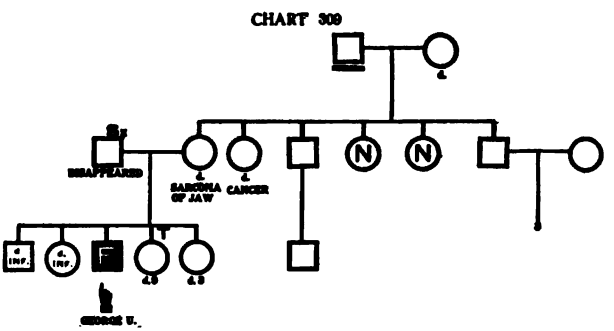


cancer; two other sisters are normal. The maternal grandfather is in the Old Folks' Home. The father was very brutal to the wife and some of the family think George was injured before he was born; that, however, must be considered doubtful.

**CASE 310. ISAAC C.** 12 years old. Mentality 4. Has been here 2 years. American born, of American parents. Had measles at the age of six. Condition said to be congenital.

Isaac did not walk until four years of age; his hands are slightly deformed; he twitches when excited. He talked at three; cannot dress himself; knows some of his letters but cannot count. Soon after admission he was out walking when he said his foot was asleep, he was not able to get back to the house without help; since then he has had spells of inability to walk; he is not very trainable.

The family history is rather strongly negative. An older brother is normal, the parents are normal. The maternal

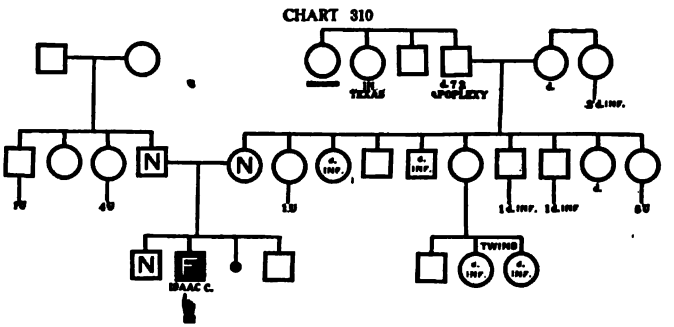


grandfather died at seventy-two of apoplexy. Beyond that there is little indication of any probable cause.

**CASE 311. KIT J.** 10 years old. Mentality 3. Has been here 2 years. American born, of Italian parents. Had scarlet fever at the age of two, measles at three; is deaf and dumb.

Kit is a little microcephalic boy, considered deaf and dumb; has been taught to say a few words; is strong in imitation; has been taught his name and prints it without a copy; knows where everything in the kindergarten room belongs, and can get it and put it away. He seems quite trainable, whether he will actually improve in mentality is still a question.

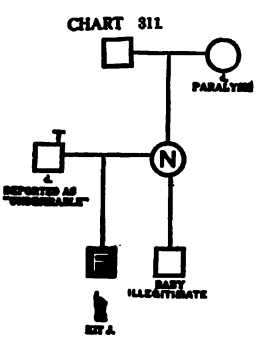


This family are nearly all in Italy, the father was sent back there, and died two days after his arrival. The mother is a normal woman but has a very small head. She has an illegitimate child that is a little more than a year old, and appears normal. Of course nothing can be determined as yet as to its actual mentality. No other relatives can be traced.

**CASE 312. ISAAC H.** 22 years old. Mentality 9. Has been here 12 years. American born; father German, mother's nationality unknown. Had measles at the age of six.

Isaac is a high grade boy who came here at the age of ten, and has made steady improvement. He showed rather unusual ambition for a feeble-minded boy and has greatly improved. He can read in the Fourth Reader and write a short story as well as a fairly readable letter. The hand-writing is very poor, but the spelling and form are unusually good.

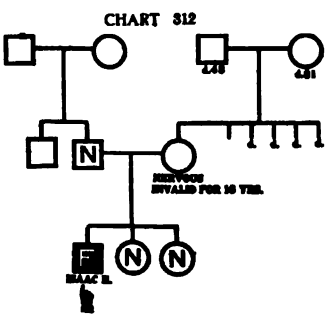


Isaac was usually a very good boy, and within the limits of his mental capacity, quite trustworthy. He found his records in the Report Book one day, and not liking some of the things that were said, he completely destroyed everything.

On one occasion when we were short of an attendant, he was given the privilege of having some charge of a group, under the immediate supervision of a superior officer; he enjoyed this very much and assumed a good deal of authority.

The following letter is interesting in this connection and also as showing his ability in letter writing:

Mr. Ferris
I would like to stay from the electrician this morning so that I can get my floor in order right and I would also like to have Gussie G. stay from the tailor shop because I am going to have the Domortory waxed and I would like to keep
Paul D.
Bryon C.
From your friend,

As sometimes happens with boys of this grade and type, he became somewhat uneasy in the Institution and finally ran away;

CASE 313, FRANK C., AGE 25. MENTALLY 9.

Drawn by FRANK H., CASE 314.

he was gone sixteen days and was finally found in jail. He came back and worked steadily and well for some time then he planned to run away again but was detected. He had two suitcases of stolen clothes and a trunk full of valuable tools. So strong was this desire to try his luck out in the world that he was finally paroled to his father. He is working steadily and returns each year on the anniversary of his parole to have it renewed. Says he is "Not married. Doesn't care about girls."

**CASE 313. FRANK C.** 25 years old. Mentality 9. Has been here 11 years. Nationality unknown. Supposed cause, " fall soon after birth."

Frank has had the usual history of a boy of his mentality; has learned to read and write and count to a certain point but seems to have no ambition to make use of even what he has attained in this line. He is more interested in general work, particularly in the tailor shop but will do any kind of work that he likes to do, very well indeed, can run the electric sewing machine and the buttonhole machine.

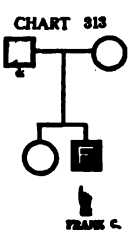


He is quiet, rather sober but obedient, and apparently perfectly contented with his life and work. He is a good Institution helper.

He is a Children's Home case and nothing is known about his family, except that he had an older sister. The father is dead and the mother was unable to take care of her children.

**CASE 314. FRANK H.** 19 years old. Mentality 8. Has been here 4 years. American born, of American parents. Instruments were used at birth. Had whooping-cough at six years, measles at twelve years. Assigned cause, " masturbation."

This case is an interesting one because Frank came on the assumption that he was feeble-minded, but he has proved to be insane. It well illustrates the difficulty that sometimes is met with in deciding between the two.

We of course knew very quickly that there was insanity present

but, on the basis of the information, we thot at first it was insanity grafted on to primary feeble-mindedness. His ability in drawing, specimens of which are reproduced opposite, was taken to illustrate one of those remarkable cases usually classified under the head of idiot savant. In other words, we thot that he had a special gift in this one direction, being feeble-minded in all other ways. After a careful study of his previous history and his family

CHART 314

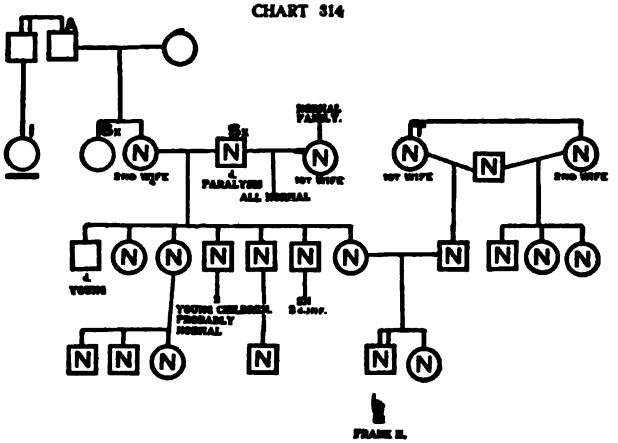

history we conclude that Frank is a clear case of dementia præcox, and while he is now in a mental condition that approximates that of a child of eight, he has been much better. He has been able to read, write and do arithmetic far beyond anything attained by feeble-minded children.

He has at times been very strongly religious; had been in public school seven years and evidently made excellent progress, but at present he is working in the dining room and does very well; does not mingle much with other children. There is no feeble-mindedness in the family but undoubtedly the dementia præcox could be accounted for if we went deep enough. There are some indications of irregularities, and in his ancestry there is insanity.

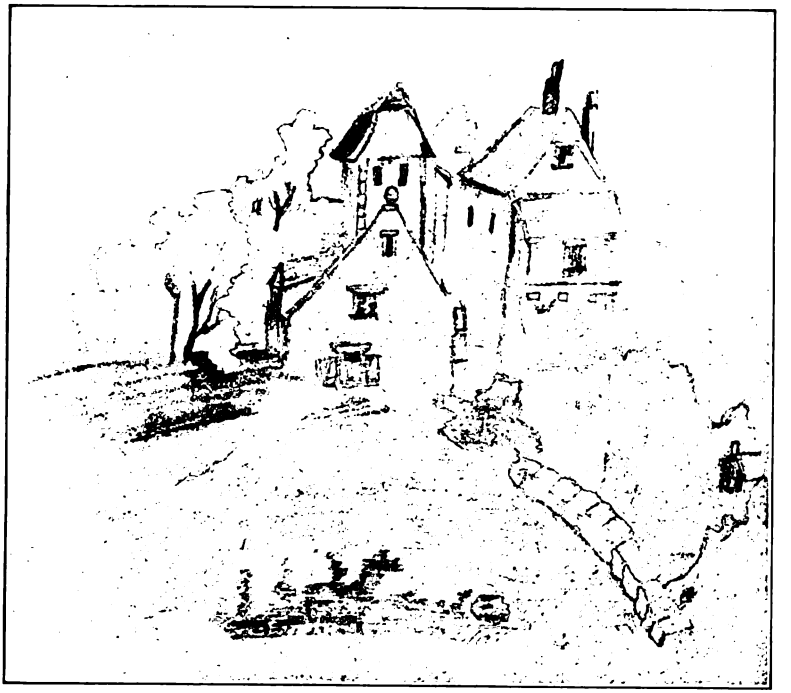

Drawn by FRANK H.

" Notra Dame
London "

" Entrance to
a Cemetary "

Drawn by FRANK H., CASE 314.

CHART 315

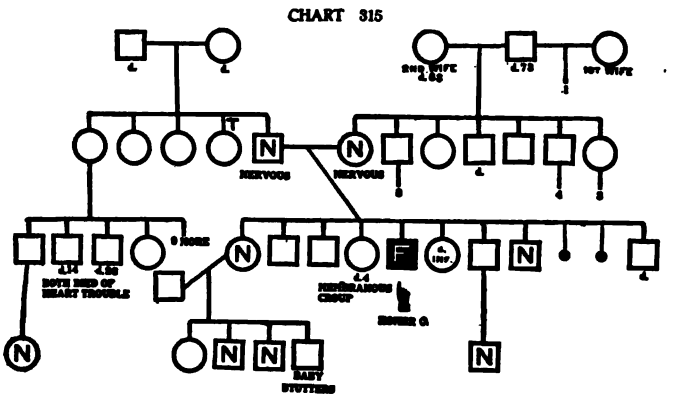

**CASE 315. HOMER O.** 23 years old. Mentality 9. Has been here 8 years. American born, of German parents. Had whooping-cough at four years, measles at six; has dizzy spells. Condition said to be congenital.

Homer is another high grade boy who came here when he was fourteen years old. He had been in public school seven years and could read in the First Reader. The first year after admission he could not write a single letter without assistance; was doing fairly well in basketry. He improved very much in reading and can write a little. He makes no practical use of his accomplishments, however, but is a good worker in the kitchen and laundry; he has chronic rheumatism.

There is nothing satisfactory to account for Homer's mental condition, he had a very severe case of whooping-cough when small and several times was thot to be dying. He also had a fall from his baby-carriage, the character of which is not described. He was three years old before he learned to say words but now talks fluently.

**CASE 316. BENJAMIN D.** 21 years old. Mentality 7. Has been here 7 years. American born, of American parents. Condition said to be due to accident. Child had cerebro-spinal meningitis at the age of six months. Has had convulsions, measles at six years, whooping-cough at seven.

Benjamin is somewhat hydrocephalic; is weak also in the ankle joints, possibly a case of congenital ataxia. When he came he walked on crutches, indeed the first time he appeared at the Training School he did not walk at all; but as he grew older he improved somewhat and now he is able to walk without even a cane, altho it is with considerable difficulty. He is fairly ambitious both to control his muscular system and to learn in school. He knows his letters, counts to a hundred, knows colors; draws a little, helps in housework a little; memory is good, attention fair; he has probably reached his limit of mental improvement but may still gain in his physical condition.

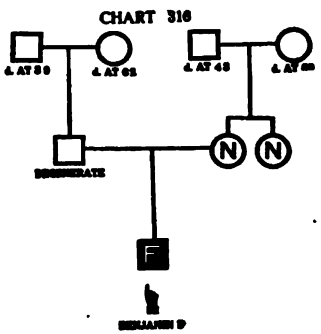


The family chart leaves much to be desired inasmuch as it has been impossible to get any record of the father except that he was alluded to as a degenerate. The mother and her sister are said to be normal. Of the grandparents nothing could be learned except their age at death. Of course the hydrocephalus itself could cause the defect while the ataxia may be connected with the father's degeneracy. It is equally true that the father may have been mentally defective as well as degenerate, so that the case must stand as inconclusive.

CASE 317. LUCY O. 38 years old. Mentality 7. Has been here 25 years. American born, of German parents. Condition supposed to be due to convulsions which she had at seven months. Had whooping-cough, measles, scarlet fever; congestion of the brain at seven years, inflammation of the lungs.

Lucy was 13 when she came to the Training School, talked as if tongue-tied; was obstinate and thieving, careless in dress, could do a little housework.

" Study of a child. Samuel here I am for I was called."

Drawn by FRANK H., CASE 314, AGE 19. MENTALLY 8.

Lucy came in those early days when we knew no better than to attempt much more ambitious things than we do now; for instance, two years after admission it is recorded that she "has learned to spell and write words of five letters, does a little geography and history but becomes confused if given much at a lesson"; two years later was writing small letters, with copy, very neatly, made patchwork and could hem. During the next year she could read forty pages in the beginner's Reader, could

CHART 317

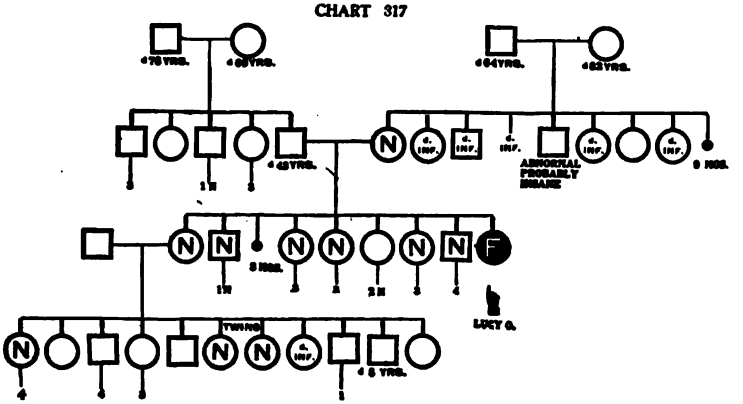

write fifteen small letters without copies; was one entire week learning the small letter "k"; four years later it is recorded, "makes no school progress but does very good cottage work." To-day she is a cottage helper and very useful with small children, having considerable ability in instructing and interesting them in play with dishes, etc. even displays quite a bit of judgment in their management, is cheerful, affectionate and willing, sometimes quarrelsome and stubborn, but generally obedient; quick and excitable.

The family history shows several normal people, one case of insanity and a number of deaths in infancy. But one can hardly say that it is even probable that this is a case of hereditary feeble-mindedness. All of Lucy's known sibs are normal.

Of the father's family we know very little but we know of no defect. The mother is a normal woman, several of her sibs died in infancy and one brother was abnormal, but this is accounted for by the possibility that it was more probably insanity than feeble-mindedness; the mother called it "hysteria."

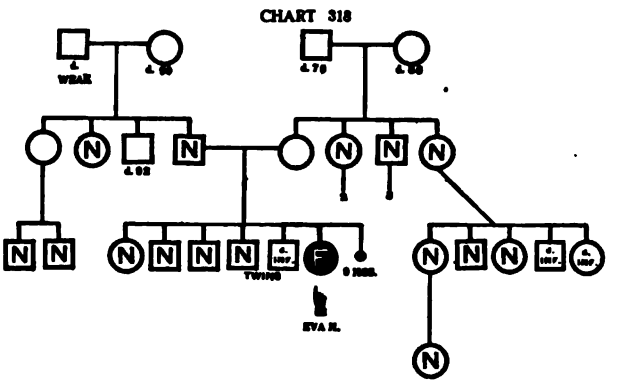


**CASE 318. EVA M.** 11 years old. Mentality 6. Has been here 5 years. American born, of Russian parents. Had measles at the age of one year, has had cerebral paralysis. Condition probably due to accident.

Eva is a cheerful, affectionate little girl, quiet and obedient, very willing, tries, and is making considerable progress. Talks indistinctly; plays a little, can help make beds; dusts; sews on buttons; helps with the smaller children.

This child has been treated with pineal gland extract and seemed to gain. Experiment is to be continued later.

Eva's head is quite large. She had convulsions at birth, and the defect showed at three months. No reason is known for the defect; the family history does not seem to give any indications. The mother's condition is indeed undetermined but she appears normal.

**CASE 319. IRA O.** 14 years old. Mentality 6. Has been here 5 years. American born, of American parents. This was a case of instrumental delivery. The condition is said to have been congenital.

CASE 318, EVA M., AGE 11. MENTALLY 6. (top left)
CASE 327, NORA C., AGE 20. MENTALLY 1. (top right)
CASE 319, IRA O., AGE 14. MENTALLY 6.
CASE 321, FANNIE T., AGE 53. MENTALLY 7.

Ira is a middle grade child, very slow of speech and has a slight stutter, but gave much hope of improvement when first admitted. At that time he did not know his alphabet, knew black, white and gray. Could not do an errand, could throw a ball but not catch one. In 1910 his teacher wrote "it has taken a long time for him to learn but he has at last learned to iron an apron." Another teacher writes "he does not know more than two words. I have had him in English for over two years but there is no improvement whatever and at times he is rather troublesome and stubborn. Can count to fifteen and can write some from copy. He does not show the evidence of improvement in English that I thought he was going to."

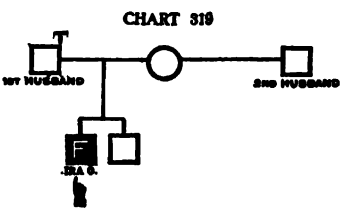


And so he settles down to being "a useful little boy in a general way."

Ira's family could not be traced at all. Some neighbors finally told us that his father died of tuberculosis. Everything else is blank.

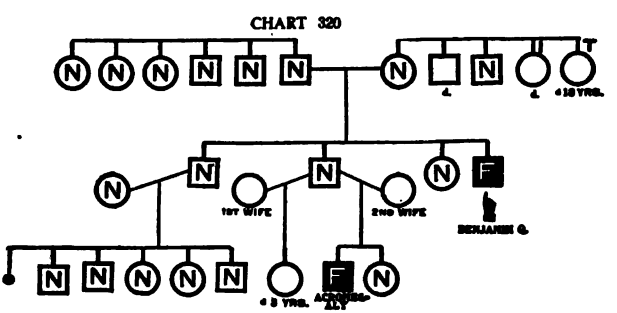


**CASE 320. BENJAMIN Q.** 68 years old. Mentality 6. Has been here 22 years. Nothing is known of Benjamin's nationality.

He is an illustration of the possible longevity of feeble-minded persons. He talks a good deal but very indistinctly; can hardly

be understood except by those who know him well. Dresses and undresses himself; washes; is cheerful, cranky, obedient, willing and tries, very excitable and sensitive. Gets along well with the children, needs no supervision over the simple tasks that he can do. Works at the cow-barn all day; is fond of animals, especially the pigs.

There is no proof of heredity in this case. The father's family appears entirely normal, the mother's also except for a sister who is insane. A brother of Benjamin had a feeble-minded child, a case of acromegaly, but since we do not know the character of the wife we cannot infer anything from this.

Benjamin gave a positive Wassermann reaction.

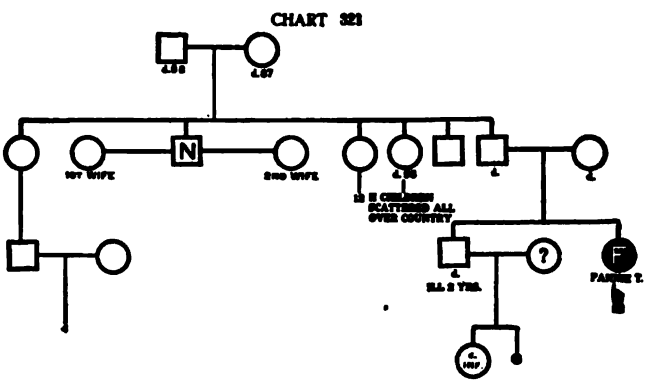


CASE 321. FANNIE T. 53 years old. Mentality 7. Has been here 21 years. Assigned cause of the condition, "hit in the head by a stone thrown at her."

Fannie came here from another Institution for the feeble-minded and has never been able to take very much training. She can help sort clothes in the laundry and is good about the house, in the dormitory and kitchen; is neat and clean.

There are some good reasons for thinking this is a defective family, but we have not been able to verify anything.

**CASE 322. NATHAN I.** 19 years old. Mentality 4. Has been here 6 years. American born, of German parents. Condition is said to be congenital.

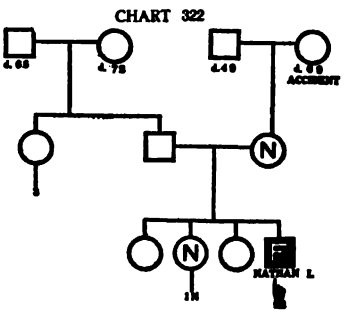


Nathan is a jolly, good-natured fellow, understands a command and is fairly obedient; attended school some; cannot count; does not know letters; has fair memory; has been given a fair trial in school and is not able to do anything; can dust, sweep and do fairly good housework of the simpler kinds.

It has been impossible to trace this family far enough to determine any possible cause for the condition.

**CASE 323. WINNIE D.** 25 years old. Mentality 4. Has been here 17 years. Polish, of Polish parents. The child was born in Poland, has had measles and whooping-cough; is said to have had spasms and been paralyzed some months. The latter seizure was only slight, however.

Winnie is a dull phlegmatic girl, of low grade, has made but little improvement since coming here, possibly some in her disposition; does not destroy her clothing as much as formerly; can dress and undress herself and do a little in the care of other children, otherwise she is not very trainable.

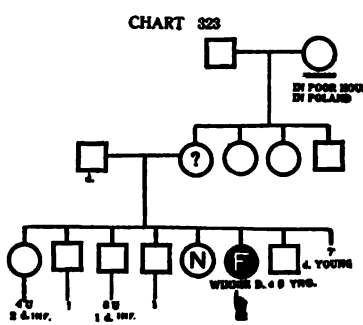


Winnie is one of fourteen children, many of whom died young. An older sister is normal; three older brothers and a sister have married and have children but the condition of these could not be determined. The mother understands and speaks very little English. She could not remember anything about her children

who had died. Winnie's grandmother is in an almshouse in Poland.

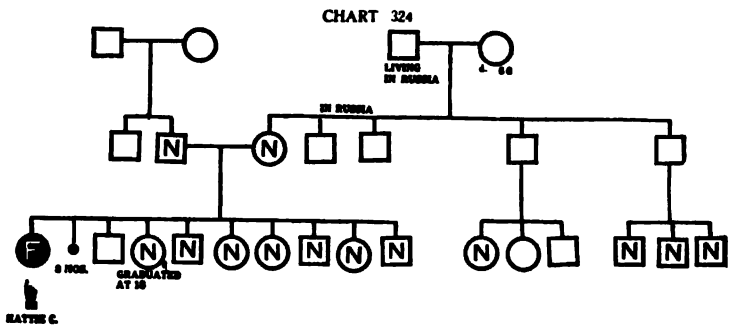


**CASE 324. HATTIE C.** 23 years old. Mentality 3. Has been here 15 years. Was born in Russia, of Russian parents. Has had measles and whooping-cough. Labor was normal and birth natural.

Hattie is untrainable, cares for herself, but does nothing else. Nothing can be found to account for her condition; at least seven younger children are normal. The parents are normal but we know nothing of the grandparents and there might be a recessive condition here. But so far as our data go, we cannot classify it as an hereditary case.

Hattie's parents immigrated to this country when she was about three years of age; whether her condition should have been detected at that time, it is a little difficult to say; she is so very low grade now that it would seem as tho she must have shown it even at that age, but one cannot be sure.

**CASE 325. GERALD M.** 19 years old. Mentality 3. Has been here 2 years. American born, of American parents. Has had measles; had convulsions when teething. Supposed cause, " fall from baby carriage."

Gerald is not a bad looking boy but is quite low grade. He commenced to walk at the age of two and to talk at seven. He cannot do any work in number, reading or writing; can do an errand, rubs floors and dusts, under direction; can dress and

CASE 323, WINNIE D., AGE 25. MENTALLY 4.
CASE 324, HATTIE C., AGE 23. MENTALLY 3.
CASE 326, MARK C., AGE 30. MENTALLY 2.

undress himself; is obstinate and stubborn; inclined to be thieving; quick tempered and destructive.

The family chart does not give us any clue to the cause of his condition. All the individuals that can be determined are

CHART 325

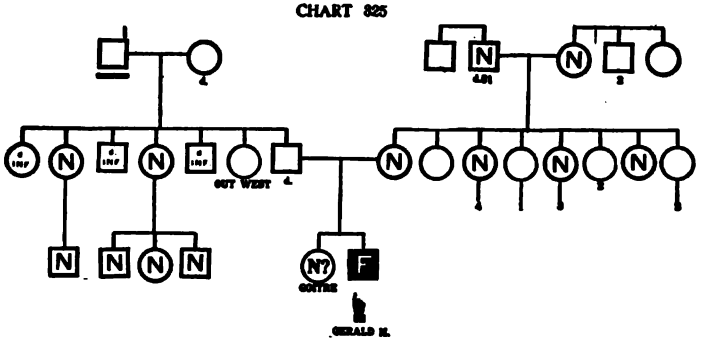

normal, and those that are undetermined do not seem likely to have been feeble-minded. On the other hand the fall from the baby carriage seems hardly likely to have been the cause. The case is classified as undetermined.

CHART 326

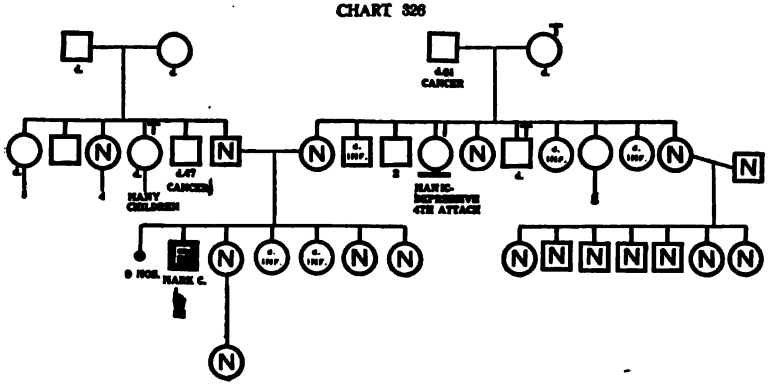

**CASE 326. MARK C.** 30 years old. Mentality 2. Has been here 22 years. American born; father German, mother American. Condition said to be congenital.

Mark is a low grade case completely untrained and untrainable. The family seems to be quite normal altho there is more or less physical disease. However, there are no conditions recognized as the cause of Mark's condition.

CHART 327

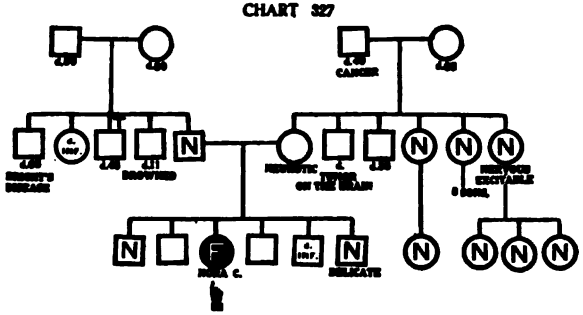

**CASE 327. NORA C.** 20 years old. Mentality 1. Has been here 14 years. American born, of American parents. Condition said to be congenital. Child had whooping-cough at one year and measles at three.

Nora is a low grade case. When admitted at the age of six walked very poorly, could not care for herself; said only a few words; would play with a doll a little; improved somewhat in the course of a year; learned to string beads; later on could say a few sentences, but was very restless. It is reported by some of the attendants that she never sleeps; eats garbage; does not understand command.

The family history leaves us much in doubt as to the probable cause of Nora's condition. There is some suspicion that the older sister is also defective but this is not clear. The same may be said of the maternal uncle who died of tumor on the brain. In the absence of more conclusive data we are compelled to leave this case unsettled.

# CHAPTER IV

## CAUSES

The scientist knows that the discovery of a true relation of cause and effect among the phenomena of nature is science itself. In the popular mind it is easy to establish this relation, for any phenomenon which usually precedes another is likely to be considered its cause. As a matter of fact any phenomenon which always accompanies another may be a cause or it may be an effect, but the progress of science has often shown that two things popularly supposed to stand in causal relation to each other were entirely independent, the one of the other; or at other times, the one which was considered the cause proves to be the effect. It is only necessary to say here that feeble-mindedness is no exception to this rule, and many things are considered as causes which probably stand in no such relation.

Even in would-be-scientific reports this error is often found. Many a percentage is quoted for this or that "cause" of feeble-mindedness, which has no better basis than the fact that in such a percentage of the inmates of some Institution a certain condition has appeared in the family histories. It is therefore assumed that this is the cause in these cases. For example, in Hack Tuke's Table we find the following: "Causes acting before birth: phthisis 24%; insanity 15%; imbecility 4%; epilepsy 3%; intemperance 13%; syphilis 1%; consanguinity 5%," etc. These percentages are based on the fact that these conditions were found in the parents in a certain number of cases. Out of 1200 cases in the Royal Albert Asylum phthisis is mentioned in 291 families, or 24% as above given, but there is no

evidence that the phthisis present in the families was the cause of the feeble-mindedness of the children.

As an illustration of the causes given by parents and too often accepted uncritically, we give the following list of assigned causes.

The full significance and frequently the absurdity will be appreciated by turning to the family charts. These will be found so dotted with the black symbols that to assign any other cause than heredity is ridiculous.

HEREDITARY CASES

| CAUSES ASSIGNED BY PARENTS OR PHYSICIANS | | | ACTUAL CAUSE |
|---|---|---|---|
| 24 | Cases | No Cause assigned | Heredity |
| 41 | " | "Congenital" | In most cases "aggravated or increased by neglect and squalid surroundings." |
| 30 | " | "Heredity" | " |
| 2 | " | Consanguinity of parents | " |
| 4 | " | Parent's intemperance | " |
| 2 | " | Instruments at birth | " |
| 1 | " | Long labor | " |
| 1 | " | Premature birth | " |
| 1 | " | Deficient animation at birth | " |
| 7 | " | Neglect and abuse | " |
| 2 | " | Medicine during early years | " |
| 3 | " | Malnutrition | " |
| 7 | " | "Acute sickness" | " |
| 3 | " | "Fits and spasms" under 2 years | " |
| 3 | " | Convulsions from teething | " |
| 2 | " | Diphtheria | " |
| 1 | " | Scarlet fever | " |
| 2 | " | Whooping-cough | " |
| 5 | " | Meningitis | " |
| 1 | " | Acute indigestion | " |
| 1 | " | Protracted diarrhœa | " |
| 1 | " | Abscess in throat — 3 years | " |
| 2 | " | Paralysis | " |
| 1 | " | Lesion of brain, tumor | " |
| 1 | " | Fall out of bed | " |
| 2 | " | Fall out of baby carriage — 14 months | " |
| 2 | " | " " " " — 5 months | " |
| 1 | " | Fall in yard — 2 years | " |
| 1 | " | Fall to floor — 4 days | " |

| Causes Assigned by Parents or Physicians | | | Actual Cause |
|---|---|---|---|
| 4 | Cases | Fall when a baby | Heredity |
| 1 | " | Struck by train | " |
| 1 | " | Struck by baseball — 6 years | " |
| 1 | " | Struck on head | " |
| 1 | " | Serious fall of the mother | " |
| 2 | " | Sickness prior to birth | " |
| 5 | " | Shocks and distress during pregnancy | " |
| 1 | " | Mother frightened by a horse | " |
| 1 | " | Mother shocked by sight of woman with hare-lip | " |
| 1 | " | Careless handling by nurse during first week | " |
| 1 | " | Result of nourishment (condensed milk) | " |
| 1 | " | Frightened by dull nippers of barber at first hair cut | " |
| 1 | " | Perhaps from bite of spider poisoning the blood | " |

Total — 173 cases. There are 9 cases of 2 in a family.

Without going further into this matter we proceed to consider the facts brot out by the study of our 327 family histories. Twenty-seven of these have been thrown out of this consideration of causes because of insufficient data. One hundred sixty-four or 54% of the remaining 300 histories show other feeble-minded persons in such numbers or in such relation to the individual case studied as to leave no doubt of the hereditary character of the mental defect. In these cases it is evident from the charts themselves that we are dealing with a condition of mind or brain which is transmitted as regularly and surely as color of hair or eyes. Thirty-four cases, 11.3 %, have been grouped under the head of Probably Hereditary. The charts of these, while not showing so certainly as in the former group the hereditary nature of the trouble, yet have a high degree of probability and may be considered hereditary.

The term Neuropathic Ancestry has been used to explain the condition of 37 children, 12 %, whose family histories show relatives suffering from various brain affections, such as paralysis, apoplexy, "brain disease" and the like, epilepsy, insanity (so described), blindness, deafness, and other neurotic conditions.

Fifty-seven cases, 19 %, have been "accidental" cases. Ac-

cidental as here used includes every unforeseen event which is recognized as probably an adequate cause.

In the 8 remaining histories, 2.6 % of the total number, there has been found nothing to account for the conditions; these are for the most part from intelligent families who have apparently given us every possible help to discover a reasonable cause.

### HEREDITARY FEEBLE-MINDEDNESS

In this group there are 164 family histories in which either there are so many feeble-minded individuals or the feeble-mindedness occurs in such relation to the case that there can be no doubt that the condition is inherited. To attempt to account for it in any other way would necessitate too many assumptions.

The reader will doubtless question the classification of certain of these if he is unfamiliar with the problem. There are a number of charts where the feeble-mindedness does not show continuously in the direct line; that is, it is not a case of child, parent, grandparent, all feeble-minded. After reading the chapter on the law of transmission of feeble-mindedness, it will be seen that there is no case included in this group where it is not vastly more probable that the condition is hereditary than that anything else is the cause.

A study of these charts shows that a mental defect or a low degree of intelligence is a characteristic of some human stocks, and that that condition is transmitted as truly and accurately as color of hair, stature or any other character which is known to be hereditary. This level of intelligence is such that the possessor cannot compete with others in the struggle for existence, or cannot manage his own affairs with ordinary prudence. That is, he needs the care and guidance of some one more intelligent than he. When this condition exists, as it often does, in an otherwise healthy family, we call it pure feeble-mindedness.

There seems to be no reason why the people of this grade of

intelligence should not be the victims of all the diseases and accidents that attack our common humanity; nor is there any evidence that they are not thus attacked. The result is that many of these charts show the same sprinkling of disease and accident that is found on charts in the other groups where the feeble-mindedness is not hereditary or that would be found in many normal families. These are cases of hereditary feeble-mindedness plus disease, accident, etc.

In some of these families there may be doubt as to what is the active cause of the condition in a particular individual on the chart, — even the child in the Training School with whom our studies began.

To illustrate the point, suppose a child on one of these charts where it is clearly a case of hereditary feeble-mindedness also had meningitis in infancy so early that the defect was not noticed before the disease. Now the question arises — how do we know that his condition is due to the family trait and not to the meningitis? We do not know, nor does it matter in most cases so far as the classification of the family is concerned. That individual might be marked normal and it would not change the fact that it is a family in which there is hereditary feeble-mindedness.

### PROBABLY HEREDITARY

This group contains 34 cases, numbers 165 to 198. See pages 280 to 317. In these cases we cannot be certain of the hereditary nature of the feeble-mindedness. In some we have been unable to get facts sufficient to mark the doubtful individuals, in others the condition of feeble-mindedness is so recessive that it shows in only a few individuals. These cases however, contain for the most part two or three known feeble-minded persons. This fact, together with other considerations, including the type of the child, produces altogether a very high degree of probability that they are hereditary. Here as elsewhere we have tried to maintain a conservative attitude.

Probably many a reader will feel that a number of these cases together with a number of cases now classified in the Neuropathic and Accident Groups should go in the Hereditary Group. There is much to be said for such a classification but we have felt that in a study such as this, where it is manifestly impossible to establish with mathematical certainty the proportion of the feeble-minded that are caused by heredity, it was wisest to take a position which would give us with a high degree of probability their lowest limit, so that it will be possible to say — there are at least so many.

### MENTAL AGE IN RELATION TO FEEBLE-MINDEDNESS

The following statement shows the distribution of mental ages in the fundamental groups.

| Mental Age | 1 | 2 | 3 | 4 | 5 | 6 | 7 | 8 | 9 | 10 | 11 | 12 | Total |
|---|---|---|---|---|---|---|---|---|---|---|---|---|---|
| No. Hereditary Cases | 8 | 24 | 14 | 9 | 8 | 25 | 29 | 27 | 12 | 12 | 5 | 0 | 173 |
| No. Probably H. Cases | 0 | 4 | 5 | 4 | 4 | 1 | 4 | 10 | 2 | 1 | 0 | 0 | 35 |
| No. Neuropathic Cases | 2 | 10 | 5 | 0 | 3 | 6 | 5 | 3 | 1 | 1 | 1 | 0 | 37 |
| No. Accident Cases | 6 | 9 | 9 | 10 | 4 | 3 | 4 | 3 | 4 | 3 | 1 | 1 | 57 |
| No. No Cause Cases | 1 | 5 | 1 | 0 | 0 | 0 | 0 | 1 | 0 | 0 | 0 | 0 | 8 |
| No. Unclassified Cases | 1 | 2 | 4 | 2 | 1 | 5 | 4 | 6 | 2 | 0 | 0 | 0 | 27 |
| | 18 | 54 | 38 | 25 | 20 | 40 | 46 | 50 | 21 | 17 | 7 | 1 | 337 |
| | 72 Idiots | | 169 Imbeciles | | | | | 96 Morons | | | | | |

Early in this study we were impressed by the fact that the low grade children were more often children of good parentage, than were the high grade children.

Grouping the figures of the preceding table into Hereditary and Non-hereditary (omitting Unclassified) and reducing to percentages we get the following table. The facts are shown graphically by the accompanying curve.

| Mental Age | | 1 | 2 | 3 | 4 | 5 | 6 | 7 | 8 | 9 | 10 | 11 |
|---|---|---|---|---|---|---|---|---|---|---|---|---|
| Total Cases . . . . | | 17 | 52 | 34 | 23 | 19 | 35 | 42 | 44 | 19 | 17 | 7 |
| Hereditary | Cases | 8 | 28 | 19 | 13 | 12 | 26 | 33 | 37 | 14 | 13 | 5 |
| | % | 47.0 | 53.8 | 55.8 | 56.5 | 63.1 | 74.2 | 78.5 | 84.1 | 73.7 | 76.3 | 71.4 |
| Non-hereditary | Cases | 9 | 24 | 15 | 10 | 7 | 9 | 9 | 7 | 5 | 4 | 2 |
| | % | 53.0 | 46.1 | 44.1 | 43.4 | 36.9 | 25.8 | 21.5 | 15.9 | 26.2 | 23.6 | 28.6 |

*Explanation of Diagram*

In hereditary feeble-mindedness the children tend to have about the same grade of mentality as the parents, consequently a large proportion of the children have a mentality of from seven to ten. Since idiots do not marry, the fact that 50% of the idiots are in the Hereditary Group is perhaps due in part to exceptions to the rule, and more largely to those who have had some accident in addition to the hereditary factor; that is, they should have been morons or high grade imbeciles but accidents at, before, or after, birth reduced them to idiocy. We have found some cases where it is clear that this is what has happened. Feeble-minded persons of mentality under five rarely become parents; at five there are some, at six there are more, and at seven and eight it is common. The curve of hereditary feeble-mindedness reaches its maximum at eight to twelve. Such a curve representing facts so consistent with other known facts, is strong corroborating evidence of the correctness of the general point of view.

Our numbers for nine, ten and eleven are unfortunately small, which may account for the drop in the curve at those ages. It is also possible that we have made a wrong classification and have put too many into the neuropathic and accident groups. With a view to seeing how possible this might be, we have reviewed these two non-hereditary groups with the following result which the reader can verify for himself.

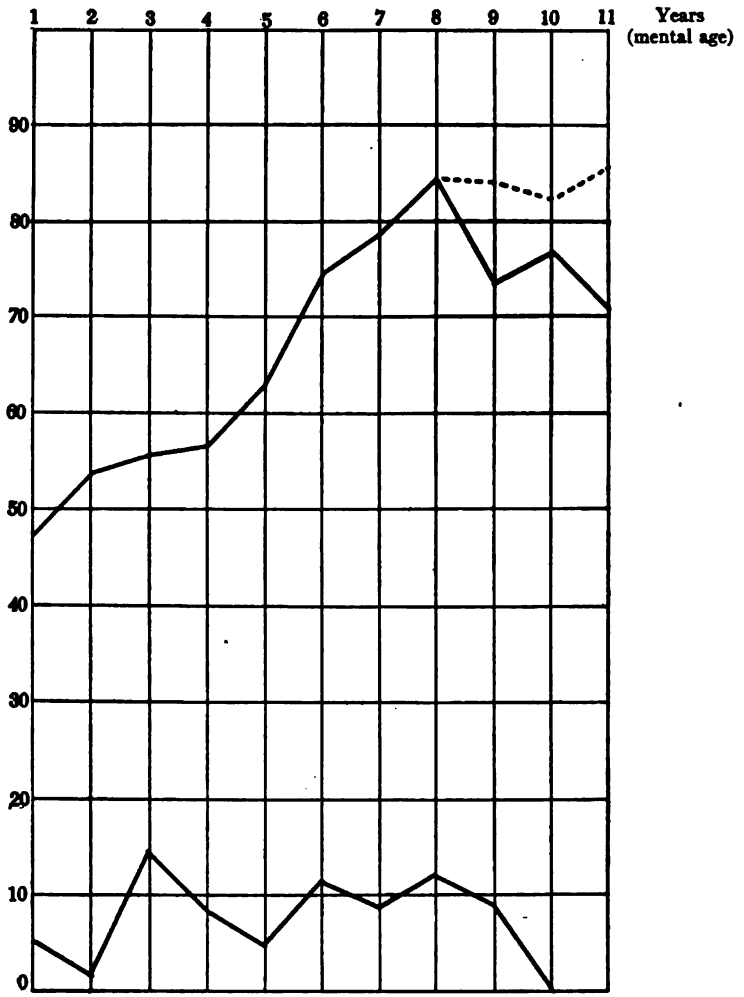


Diagram showing relation of hereditary feeble-mindedness to mental age.
*Ordinates are percentages. Abscissas are mental ages.*

We find Cases 279, 237 and 239 are doubtful and some of them have quite a degree of probability that they may have been hereditary. If we assume that two out of these three ought to have been put in the hereditary group we bring our curve up to 84 % for the nine year group.

Of the ten year olds there is only one case that might be wrongly classified, that is No. 277. This is said to be a meningitis case but the evidence is not complete.

At age eleven, No. 236 is also a doubtful case.

If we transfer these cases to the Hereditary Group, our curve follows the dotted line. This is certainly a very significant result.

If the suggested change were to be allowed it would give us a new figure for the heritability of morons, namely about 85 %. It is probable that a larger number of cases would establish this.

In age twelve there happens to be only one in our entire group of cases, and of course there is no conclusion to be drawn.

This curve would seem to be further proof of the general accuracy of our classification.

The curve at the bottom of the chart is that of the cases that had to be thrown out for lack of data sufficient to classify them. It merely shows in contrast to the other that there is no law running thru this group of cases.

### NEUROPATHIC ANCESTRY

This group numbers 37 charts. See pages 318 to 350.

These cases range in intelligence from one to eleven. They have generally been placed in this group either because the history of the case gives as an assigned cause some neuropathic condition of parents or grandparents; or because the chart itself shows a number of individuals in the family, more or less in the direct line, who suffered from diseases which it is reasonable to believe may have had some effect upon the metabolism of the offspring, altho they may not have affected the germ cells of the parents.

It should be borne in mind that many conditions that appear on these charts are not to be considered as causal in themselves but simply as symptoms of a neuropathic taint. Just what was the essential factor in that condition it may be impossible to determine at this stage of the study. For example, on Chart 235 we have two cases of suicide, both probably due to insanity, which was itself a symptom of a neuropathic condition which may show in the feeble-mindedness of the child, tho the child's own mother and father were normal.

Doubt as to the correctness of the classification may be maintained in some of the cases. In No. 201 for instance the father was alcoholic and had a brother who was blind. Byron's paternal grandfather died of paralysis at eighty. Altho paralysis at that age of life may not be significant, on the other hand it may be. There is rheumatism on that side, and also in the mother's family. The fact that there were six miscarriages and that Byron himself was born blind, is certainly significant. It is not the type of family in which we find hereditary feeble-mindedness and there is no suggestion of any other member's being feeble-minded. The father and mother both worked in pottery works and it is possible that this may be a case due directly to lead poisoning. If this is true it should be classed with the accidents after birth, since it would be an accidental condition affecting the mother's ability to nourish her child. Since this cannot be demonstrated and there are neuropathic conditions in the family, it has been classified here.

We have not been able to learn very much about Case 210. But on the theory that neuropathic conditions, when they are numerous and significant, may cause a defective offspring, we have placed it in this group. As will be seen, the mother was very nervous and sickly, her mother died of cancer, the father's sister was insane, and their father died of apoplexy. With all of this deviation from perfect health it is perhaps reasonable to admit that this explains the condition.

No. 219, is one of another character. This is definitely known as a case of Friedreich's ataxia which is recognized as a family disease. These children were apparently normal for a time but as the disease began to develop they began to deteriorate mentally as well as physically.

The cases of this group give rise to many interesting questions which we do not pretend to answer. For example, Chart 216 shows the father of Kent E. alcoholic to the extent of suffering from delirium tremens. In spite of that fact Kent is the only feeble-minded child in the family, and there were six normal children born after him. A miscarriage and a death in infancy may be due to the alcohol, but certainly if alcohol causes feeble-mindedness we should have a strong expectation that some of the later children would be feeble-minded. The mother's father died of paralysis and a number of deaths in infancy in her family would indicate that there might be a neuropathic condition on this side of the house also. But why did this neuropathic condition affect only one individual out of eleven, or out of eight if we count only those that survived? Such questions we cannot answer. The only thing that we can say is that in this case conditions were probably just right for the worst results to follow.

Case 214 is particularly puzzling. This is socially a good family with a large number of normal people in it — not very much to account for Isadore, even on the theory of neuropathic ancestry. The father was sexually immoral; his mother died of paralysis at fifty, while his father's sister was neurotic. Isadore's mother's brother was defective. It is of course possible that there is a taint of feeble-mindedness here which is recessive and only rarely appears. On the other hand, as long as we accept neuropathic ancestry as a possible condition of feeble-mindedness, we cannot refuse to admit it here.

Case 234 would undoubtedly be placed by an enthusiast in the Hereditary Group; others might perhaps say it came from the marriage of second cousins. But with the alcoholism, the

insanity, the migraine, the miscarriages, the tuberculosis, one must certainly admit that there is a neuropathic condition here. If neuropathic ancestry ever causes feeble-mindedness it must be admitted as the possible cause in this case.

Case 215 looks like a case due to syphilis, especially as the whole order of things in the fraternity of our boy is one that is recognized by physicians as a syphilitic story, — the deaths in infancy, the miscarriages, the mental defectives, and perhaps even epileptics. When we see however that both grandmothers died of paralysis or apoplexy, we cannot be sure that the syphilis is the cause of the feeble-mindedness.

To sum up, we have found in the cases placed in this group: first, generally a very different type of family from those in the other groups; second, either no other feeble-mindedness, or at most one or two cases that are certainly accounted for by accident; third, these cases are practically all reported as being congenital; that is, the defect was noted too early to be due to any condition existing after the birth of the child. There were no conditions at the time of birth that could explain it and no conditions acting before birth except what would come under the head of the neuropathic ancestry.

The significance of these cases from the eugenic standpoint will be considered later.

Biologically and socially this is a most important group. Whether what we call neuropathic ancestry is true heredity or not, cannot be determined from our data. In most of the cases it would appear that it probably is not hereditary in the sense that the defect of these children, whose condition is due to the above mentioned conditions in the ancestors, could be transmitted by them to their descendants. The question involved is of course the biological one of whether the condition of the ancestors which manifests itself as paralysis, insanity, epilepsy, blindness, deafness or other neurotic conditions has affected the germ plasm. In those cases where the various conditions are found in the

mother there is no necessity for concluding that it has affected the germ cells. We can account for the results in a much simpler way; namely, that the condition of the mother has affected her power of nutrition, and that therefore the offspring is not brot to complete development. With the father the case is somewhat different. If his condition of paralysis or other brain trouble affects the offspring, it would seem to be conclusive proof that his germ cells have been affected, since his contribution is only the germ cell. Where the neurotic condition has been found in the grandparents only, it would seem that they had produced in their offspring a condition which results in mental defect in the second generation. Is this heredity or is it an acquired condition? We must leave this problem for the biologists, merely presenting here the data as we have found them.

In the accidental cases there would be according to current biological theories no expectation that the condition would be transmitted. It should be noted that any of the cases considered due to hereditary feeble-mindedness, or those due to neuropathic ancestry may in turn be subject to accident. In fact these accidents are often present. Herein lies the inadequacy of the percentages recorded by many earlier investigators. With them, if, *e.g.*, instruments were used at birth, this was considered to be the cause of the mental defect and these writers did not investigate to see whether there were other feeble-minded individuals among the ancestors, — whether it might not be a case of hereditary feeble-mindedness.

Since many normal children are delivered by the use of instruments with more or less temporary deformity to the head but without any effect upon the mentality, it is unreasonable to conclude, in those cases where there is both hereditary feeble-mindedness and history of instrumental delivery, that the latter is the cause of the mental deficiency. It is only logical to conclude that the hereditary condition is the causal one, and the other a mere accident superposed upon the primal condition

and probably without any special effect upon it. The same is true of any other supposed cause of feeble-mindedness, which cannot be shown to be the sole factor. In a large percentage of cases hereditary feeble-mindedness or neuropathic ancestry will be found and must be recognized as the adequate cause.

### ACCIDENT

Under the head of accident we have grouped all those cases that seem to be due to causes that might have been prevented, both those acting before the birth of the child and those acting at, and after the birth. See pages 351 to 434. These altogether constitute fifty-seven cases, or 19 % of our total number.

Twenty-five cases or 8.2 % were due to causes acting before birth; of these, 11 cases (3.6 %) belong to the Mongolian type and have been set aside for special discussion. Thirty-two cases or 10.6 % were due to causes acting after birth. Of these, 16 (5.3 %) were due to meningitis. They also are discussed by themselves.

ACCIDENTS BEFORE OR AT BIRTH. This group comprises 14 cases (exclusive of Mongolians) or 4.6 % of the total. Pages 351 to 366.

The causes of these cases will be found with the history of each chart and may be briefly summarized as follows:

| | |
|---|---|
| Premature birth | 1 |
| Mother seriously ill with fever | 1 |
| Father a potter, suggesting possible lead poisoning | 1 |
| Mother with severe mental distress | 1 |
| Difficult birth (one partial strangulation) | 2 |
| Mother very ill during pregnancy | 1 |
| Neglect of child at birth in order to save the mother | 1 |
| Shock to mother | 1 |
| Drugs to produce miscarriage | 2 |
| Absence of thyroid gland (Cretinism) | 1 |
| Instrumental delivery | 1 |
| Fall of the mother | 1 |

It should be understood that we do not assert that these were the actual or sole causes of the feeble-mindedness in the respective cases. They have been put into this group because we have not been able to find any other possible causes and these are supposed to be the frequent causes of mental defect.

The reader who studies the cases may conclude that many of these "causes" are entirely inadequate and that the cases should be referred, some to hereditary feeble-mindedness, others to neuropathic ancestors, perhaps others left without any assignable cause.

The fact that only 4.6 % of our cases are left as possibly due to these causes is in itself somewhat surprising when formerly some of the things here mentioned have been credited with causing a large percentage of feeble-mindedness.

Many people suppose that a goodly proportion of feeble-mindedness is produced by the carelessness of physicians in the use of instruments at the birth of the child. It certainly is striking that only one of our 337 cases remains to be accounted for in this way. It is true that we have histories of instrumental deliveries in 28 cases but other more probable causes are always present. Fourteen are in the Hereditary Group, 4 in the Neuropathic and 10 in the Accident. In very few of these cases is the use of instruments even assigned as the cause by the parents or physician.

If a family is notoriously feeble-minded thruout its branches it is illogical to ascribe a particular case of feeble-mindedness in that family to the use of instruments. Whether a mother's fall three weeks before the birth of a child can account for the child's being feeble-minded is certainly questionable. The same thing may be said of the mental shock to the mother. Of course the only basis upon which such theories are at all tenable is that the fall or the shock has interfered with the normal metabolism of the mother, with the consequence that the fetus is not nourished and an arrest of development of the nervous system of the child results.

When one thinks of the enormous number of premature births that do *not* result in defective children, the difficulties at birth, the partial strangulation, the shock, both mental and physical that mothers go thru and yet the children born are perfectly normal, one cannot but conclude that the difference must lie in the differences in the stocks themselves, — that a good stock can invariably withstand an immense amount of accident, while a poor stock requires only a slight shock to throw it over into the abnormal side.

These facts and figures seem to compel us to conclude that such causes as listed under accidents before or at birth have a very small influence upon the question of feeble-mindedness, and that we have in all of these cases a substratum of hereditary defect, occurring in a stock, normal indeed in itself, but so near the borderline that a small additional shock produces marked defect. All these considerations emphasize the little we know about such matters and the great need of careful investigation.

### *The Mongolian Group*

One of the most clearly defined and the best known group of defectives is that designated by the term Mongolian, so called from a more or less close resemblance to the Asiatic type of countenance, the slanting eyes and round face. Their other characteristics are short stubby fingers, rather a dry, rough skin, poor circulation, a decided lack of the occipital protuberance, the cranium giving the appearance of a straight line up from the neck, and usually, especially in the older cases, there is a deeply furrowed tongue.

As a rule there is only one defective in the family where the Mongolians occur. They come more often from the better families. It is generally agreed that the condition is congenital and is due to something which interferes with prenatal development. Both Dr. Shuttleworth and Dr. Carson have called attention to the fact that they are very frequently the last born in

rather large families; the implication is that the condition is due to uterine exhaustion whereby the mother is not able to bring the offspring to full development. When they are not the last born it is often found that there has been some severe physical or mental shock to the mother which may have temporarily interfered with the procreative function.

We have collected from other institutions statistics on 332 cases of Mongolianism. In 294 of these, where the order of birth was known, we found 151 cases where the child was the last born in families of more than one. This is 51 %.

It has sometimes been claimed that Mongolianism is due to the advanced age of the father or mother at the birth of the child. Of the 332 children above referred to we knew the age of the mother in 295 cases and the age of the father in 291 cases.

The following table gives the distribution of the children according to the age of the parents: the upper line shows the ages of the parents; the second line shows the number of children born to fathers of the various ages; the third line, the number of children born to the mothers of the various ages.

SHOWING AGE OF PARENTS AT BIRTH OF MONGOLIAN CHILDREN

| | | | | | | | | | | | | | |
|---|---|---|---|---|---|---|---|---|---|---|---|---|---|
| Parents' age | 16, | 17, | 18, | 19, | 20, | 21, | 22, | 23, | 24, | 25, | 26, | 27, | 28, |
| No. of children born when the father is of the given age | | | | | 2, | 1, | 7, | 6, | 3, | 9, | 8, | 10, | 4, |
| No. of children born when the mother is of the given age | 2, | 1, | 5, | 2, | 6, | 10, | 6, | 5, | 3, | 8, | 10, | 9, | 7, |
| Parents' age | 29, | 30, | 31, | 32, | 33, | 34, | 35, | 36, | 37, | 38, | 39, | 40, | 41, |
| No. of children born when the father is of the given age | 6, | 10, | 3, | 16, | 8, | 10, | 9, | 7, | 8, | 16, | 7, | 20, | 12, |
| No. of children born when the mother is of the given age | 6, | 8, | 6, | 4, | 9, | 8, | 15, | 12, | 14, | 15, | 15, | 39, | 21, |

SHOWING AGE OF PARENTS AT BIRTH OF MONGOLIAN CHILDREN — *continued*

| | | | | | | | | | | | | | |
|---|---|---|---|---|---|---|---|---|---|---|---|---|---|
| Parents' age | 42, | 43, | 44, | 45, | 46, | 47, | 48, | 49, | 50, | 51, | 52, | 53, | 54, |
| No. of children born when the father is of the given age | 13, | 13, | 16, | 8, | 7, | 8, | 9, | 8, | 8, | 5, | 1, | 3, | 2, |
| No. of children born when the mother is of the given age | 14, | 8, | 8, | 10, | 2, | 4, | 0, | 0, | 1, | 0, | 1, | 0, | 0, |

| | | | | | | | |
|---|---|---|---|---|---|---|---|
| Parents' age | 55, | 56, | 58, | 59, | 60, | 63 | |
| No. of children born when the father is of the given age | 2, | 0, | 1, | 1, | 3, | 1 | Total — Father 291 |
| No. of children born when the mother is of the given age | 1, | 0, | 0, | 0, | 0, | 0 | Total — Mother 295 |

The table shows clearly that Mongolian children are born at all the ages during the child-bearing period; that fathers may beget Mongolians at any age from 20 to 63. As to whether the proportion of children born at any given age of parents is greater for Mongolians, we cannot say from this table. Nor does this show whether great disparity in the ages of the father or mother has anything to do with the matter. The number of children born when the mother is 40 is much higher than at any other age. This may or may not be significant.

Mongolian children are supposed to be short-lived; we have made a table of the present ages of these 332 Mongolian children.

*Distributions of Ages of Mongolians*

Of 332 Cases now living in Institutions, the ages are as follows:

| | | | | | | | | | | | | | |
|---|---|---|---|---|---|---|---|---|---|---|---|---|---|
| Chronological age: | 5, | 6, | 7, | 8, | 9, | 10, | 11, | 12, | 13, | 14, | 15, | 16, | 17, | 18, | 19, |
| Number of cases: | 2, | 9, | 17, | 22, | 23, | 26, | 22, | 30, | 19, | 25, | 17, | 19, | 14, | 16, | 11, |

| | | | | | | | | | | | | | |
|---|---|---|---|---|---|---|---|---|---|---|---|---|---|
| Chronological age: | 20, | 21, | 22, | 23, | 24, | 25, | 26, | 27, | 28, | 29, | 30, | 31, | 32, | 33, |
| Number of cases: | 6, | 7, | 4, | 5, | 5, | 5, | 3, | 2, | 3, | 3, | 3, | 2, | 0, | 1, |

| | | | | | | | |
|---|---|---|---|---|---|---|---|
| Chronological age: | 34, | 35, | 36, | 39, | 40, | 53 | |
| Number of cases: | 3, | 4, | 1, | 1, | 1, | 1 | Total — 332 |

It is a remarkable fact that the mentality of Mongolian imbeciles is almost always that of a four year old child. In the group here at the Training School numbering eleven cases eight have the mentality of four; one is six; one five; one is two. This fact of their being practically of the same mentality and of very striking physical resemblance to each other would seem to point to a definite time in fetal life when the arrest takes place.

Charts 250–260 inclusive are those of Mongolians. While they show many degrees of completeness and complications with other conditions supposed to be more or less causal of feeble-mindedness they as a whole merely demonstrate that the Mongolian condition is itself not hereditary nor is it surely due to a neuropathic condition of the ancestors, tho careful study frequently reveals more or less nervous disturbance in the ancestry. While there seems to be no reason why the cause whatever it is of Mongolianism should not act upon the low grade families, the fact remains that it rarely does, and practically all of our cases are from the better type. This was strikingly impressed upon the writer from a study of the children in the special classes in New York City schools. Those classes in schools in the upper west side and other better sections of New York City were found to possess on the average about one Mongolian in every class; whereas on the lower east side and other classes in the poorer sections of the city few or no Mongolians were found.

Chart 259 may be taken as typical of what is often found in these families. Here is a family where we have been able to get accurate information in regard to a considerable number of individuals. They proved to be normal and rather exceptionally free from other troubles. The paternal grandfather had no palate and a paternal aunt was affected with what is spoken of as religious mania. Among the sibs of our boy two died in infancy and there was one miscarriage. The fact may perhaps be taken to indicate that there is some kind of physical peculiarity in the

families where Mongolianism occurs, but it is usually obscure and frequently not more marked than would be found in many good families. At the present time metabolism studies of these cases seem likely to throw the most light upon this difficult problem.

Chart 260 shows alcoholism in the father and epilepsy in a maternal aunt. Chart 253 shows alcoholism in the paternal grand-uncle, — which is too far away to be significant. Two other charts also show alcoholism more or less remote. Chart 258 shows paralysis in the mother. Two charts show apoplexy and two others show insanity, more or less remote from the patient.

Chart 255 shows syphilis, but it will be seen that it is in no way related to the Mongolian case. Chart 257 shows much nerve disease of a more or less serious character. If such conditions were found usually in the families of the Mongolians we should be compelled to look to the nervous system itself as the seat of the trouble, but as will be seen this is not the rule.

It has sometimes been stated that the presence of a mentally defective child of the Mongolian type is a certificate that there are no other mental defectives in the family. There are however four of the families that do show other defectives. Of these four, No. 250 shows a niece of the patient who is feeble-minded and another one that is questionably normal. It is entirely possible that the feeble-mindedness in these two nieces may have come in thru the mother's family. It has not been possible to determine enough about this family to draw conclusions. No. 256 is still further removed. A second cousin is feeble-minded but his father was a suicide and it is quite possible that the defect came from that side of the house and is not in the blood of our patient at all.

Chart 255 shows three cases of mental defect: one is an uncle of our Mongolian boy. Another is a cousin of our boy, a meningitic case, also in the Institution. When we look at his ancestry, however, we find that his paternal grandfather and grandmother were both syphilitic, the former being also alcoholic; so that unless we are willing to discard syphilis in the

parents and meningitis in the child as causes of feeble-mindedness there is no logical reason to connect these two cases as having the same origin.

Chart 252 is an interesting one since it also shows two other defectives, but careful observation shows that these are only distantly related second cousins and are the offspring of a very unusual combination; their paternal grandparents were second cousins and also the maternal grandparents, and the two grandmothers were sisters and the two grandfathers brothers; it would seem evident that if there was any defect in this family anywhere it would certainly come to the surface as the result of such inbreeding.

On the whole, while it is possible to make the generalization that in the families of Mongolian imbeciles there are always some individuals who show morbid characteristics, yet these are usually so slight and often so far removed that it may well be contended that they have nothing to do with the condition, and we may accept what has been held as the probable truth by all those who have studied Mongolianism; namely, that the sole and adequate cause is to be sought in the condition of the mother during pregnancy. But what caused the abnormal condition of the mother?

ACCIDENTS AFTER BIRTH. There are 32 of these, 16 of which are meningitis. The remaining 16 constitute 5.3% of our cases, Nos. 261–276 inclusive.

The causes are summarized as follows:

| | | | |
|---|---|---|---|
| Blow on the head | 1 | Fall on the head | 3 |
| Scarlet fever | 2 | Alcohol | 1 |
| Beri-beri | 1 | Drugs | 1 |
| Convulsions (possibly epileptic) | 2[1] | Whooping-cough | 1 |
| Infantile paralysis | 2 | Measles | 1 |
| Typhoid fever | 1 | | |

[1] The infantile paralysis which is mentioned in two cases is in all probability not acute anterior poliomyelitis. It is more probable that it is a hemiplegia or a diplegia occurring in early infancy.

Comments made on the group supposed to be due to accidents before or at birth, might be repeated for this group. While on the whole it seems that these assigned causes have a better basis than in the former group, yet the question must still be raised whether, for example, the blow on the head was actually the cause of the defect, or whether beri-beri can cause feeble-mindedness. It is again significant that out of all of our cases only 5.3 % can be assigned to those commonly assumed causes. There is only one case assigned to measles; one to whooping-cough. Why does whooping-cough, even a very severe attack, leave one child feeble-minded while it does not leave the great majority feeble-minded? Many a child has had a most severe attack of measles, his life being barely saved, and yet he has not had his mentality affected in the least. Of course if a child with whooping-cough has a paroxysm severe enough to cause the rupture of a blood-vessel, as is supposed to be the fact in these cases, we see before us an adequate cause for the condition. But why does this child's blood-vessel burst when others do not? The answer can only be that there is a constitutional weakness of the vascular system which allows of a rupture here and not in other instances.

So we are led back again to the thot that we have in these cases instances of defective organism where a special stress has thrown it over into the abnormal group. For the solution of these problems, we need much more study; we need autopsies on all cases in order to discover whether the supposed brain lesion is actually present or the arrest of development of brain cells had really occurred in such a way that it could account for the condition. We need chemical studies to discover whether the metabolism has been interfered with, so that as a result the chemical composition of the brain cells has been rendered inadequate.

With such studies before us we should perhaps be able to say whether these assigned causes are really adequate or not; and knowing the cause we might be in a way to prevent the consequences in these accidental cases.

In view of the small percentage of cases ascribable to these accidents in comparison with the much larger percentages given by others, one is led to question whether in those cases all possible causes have been considered, and whether more plausible reasons have not been omitted; whether the family history if studied in all cases might not have shown a great percentage of cases of hereditary feeble-mindedness with the whooping-cough or measles as merely a coincidence.

### *Meningitis*

Of all the diseases or accidental conditions credited with being causes of mental defectiveness, probably spinal meningitis is the surest and most frequent. Surest because the causal relation can be so easily and convincingly traced that there remains no doubt. The same can hardly be said of other so-called accidental causes. With measles as with a fall from the high-chair, with whooping-cough or with a blow on the head, we are practically always more or less in doubt and we fall back upon these as causes because we know of nothing else.

In the case of meningitis however we not only have a disease characterized by inflammation of the membranes surrounding the brain and spinal-cord, which inflammation and disturbance may easily be conveyed to the tissues of the nerve centers themselves, and so might be expected to cause trouble, but we can also see very accurately the result. The child who recovers from spinal meningitis immediately shows his mental defect, and there is no escape from the conviction that it was due directly to the disease.

Spinal meningitis has in the past been a common disease and highly fatal, the morbidity running as high as 75 % while of the 25 % who survived about 97 % became mentally defective. (It has been estimated that only 3 % of those who survive meningitis survive with normal intelligence.) Under the newer treatment for this disease however mortality has been reduced to 25 %. What effect this has had upon the mentality it is as yet too early

to determine. If the 75 % who *now* survive are mentally defective to the same degree as formerly, then the value of the newer treatment may fairly be questioned. However, it is to be hoped that this treatment saves the injury to the brain so that most if not all of those who recover will recover with a normal mind.

We find among our cases 16, or 5.3 %, that are clearly due to meningitis. See Charts 277 to 292 inclusive. As will be seen from the descriptions of these cases they are very largely of low grade. There are two cases who have the mentality of a normal child of 10; one case a mentality of 9; one 7; one 5; one 4. The rest are 1, 2 or 3.

Charts 286 and 287 show remarkably clean normal families, with no alcoholism, syphilis, insanity, epilepsy or other disease or condition that could possibly account for the mental defect. Even if we were in any doubt as to the ability of meningitis to produce the result, these cases would go a long way toward establishing the causal relation.

Charts 278 and 288 are also remarkably clear. In the former the father was alcoholic; in the latter, there was a paternal grandfather who died of paralysis, and a maternal grandfather who was insane. If these conditions had any influence upon their respective descendants it did not show except in our two children. Chart 288 contains 43 normal people.

The remaining charts show various complications with other diseases and various grades and types of families. In some cases there are conditions that are quite as bad as we find in some families where there is no meningitis; in such cases of course it is not possible to say which was the more potent factor in causing the mental defect, the meningitis or the morbid conditions.

In four cases there are other mental defectives in the family, and in such relation to the patient that it might seem possible to make a diagnosis of probably hereditary feeble-mindedness. The first of these is Case 284, already discussed in the section

on Mongolianism. On this chart it is seen that Ira I. is a Mongolian imbecile, but Fred K. is a defective who has had meningitis. Besides this, Fred's younger brother is also feeble-minded, and it is possible that the father was a moron, which would point strongly toward an hereditary condition. (See revised chart, page 32.) The mentality of the paternal grandparents has been undetermined — both were syphilitic; the grandfather was alcoholic. It is entirely possible that this case should be thrown out of the meningitis group on the ground that Fred K. would have been feeble-minded even had he not had meningitis.

Case 282 shows the father of Luella was feeble-minded. We know nothing more about him and while it is possible that his condition may also have been an accident, on the other hand it may have been hereditary and Luella may be an hereditary case of feeble-mindedness, and should be thrown out like the preceding case.

However again we are not warranted in doing this, since all that is uncertain while the meningitis is sure.

Case 279 shows a maternal grand-uncle feeble-minded, while the father and paternal grandfather were paralytic. The character of this family leads us to conclude that it is not a case of hereditary feeble-mindedness.

Case 289 is also a somewhat doubtful one from the hereditary standpoint, especially as David's cousin also had meningitis. This chart well illustrates a principle that we need to bear in mind in many other cases. It is perfectly clear that there is a neuropathic ancestry here. When we consider the paralysis, the fact that one woman is marked "erratic," another one disappeared, one is neurotic, one is delicate and has poor sight, and another woman has had four miscarriages and two children died in infancy, we are compelled to believe that there is a neuropathic condition in this family which only needs a little additional stimulus to throw it over into positive abnormality. Perhaps even a mild case of meningitis would cause mental defect here,

whereas, it would not cause it in a healthier stock. If we omit the two cases where there is the possibility that the condition is hereditary, we still have 14 cases or 4.6 %, so that so far as our data are concerned the fact seems to be established that about 5 % of the cases of feeble-mindedness may be attributed to this scourge, cerebro-spinal meningitis.

Besides these cases that we attribute definitely to meningitis there are 12 cases of meningitis in the Hereditary Group. In 5 of these meningitis was the cause assigned by the parents.

There were 3 in the Neuropathic Group and 3 in the Accident but they were not due to the meningitis.

Of the hereditary and neuropathic cases nothing can be determined. Of the three in the Accident Group we know that they were feeble-minded before the attack of meningitis.

### NO CAUSE DISCOVERED

The last of the classified cases is a small group of eight family histories in which there is no cause apparent in spite of the fact that each history is fairly complete. Charts 293–300.

Five of these cases have paralysis in one or both of the grandparents. This raises the question of a possible causal relation between paralysis and feeble-mindedness. This will be discussed in a later chapter and it is only necessary to call attention to the fact that here are five cases that have nothing else that can be considered as a cause. If the paralysis is not to be considered, these cases must be counted with the three to be discussed next.

Spontaneous Origin. The cases of hereditary feeble-mindedness give rise to the question — how did it begin? For Davenport's answer the reader may be interested to look at his article in the Popular Science Monthly for January, 1912.

Before biology had attained to its present views we should have been content to state that feeble-mindedness may begin at any time in any family, as a sport, a variant, a mutation.

While we are no longer content with that answer, realizing that this only pushes the question farther back, we are nevertheless interested to see how many cases out of our total number seem to be sports or variants, that is, with no assignable cause, and yet under conditions of which all the facts seem to be known.

In our 300 cases there are 3 cases of this character. No. 298, — that of a colored child, and Nos. 299, 300, white children. These are all well filled charts with practically nothing to account for the defect. Such charts look as tho it were a question of spontaneous feeble-mindedness.

No. 298 to be sure, has another case of feeble-mindedness in the family, but this case also has epilepsy, and we have been unable to determine whether the mental defect is the result of the epilepsy, or whether the epilepsy was grafted on to a defective individual. The fraternity of Nancy H. looks as tho there were some definite cause acting which has resulted in the non-viability of at least five of the offspring. The case is not as conclusive as the next two.

Case 299 shows a large number of perfectly normal people. There is alcoholism in both grandfathers, but if this has any causal relation to the case of feeble-mindedness it is strange that it has affected only one of the fifteen children. It is doubtful if any one would assume that the alcohol had anything to do with the case.

In Case 300, there is not even alcohol. There are some tumors, but tumor has never been suggested as a cause of feeble-mindedness nor is it indicative of a degenerate or a neuropathic family. Therefore, Eunice G. also stands as a case "without a cause."

In such cases we have only two alternatives, either they are cases of spontaneous development of feeble-mindedness, or there is an adequate cause, either in bad heredity which does not show because it has been recessive, or in some accidental cause which has not been recorded because forgotten or perhaps so

apparently insignificant that it is not recognized. Which of these two is the correct view cannot be ascertained. It could of course be tested if these feeble-minded individuals were to marry and we could infer from the character of the offspring whether the defect was an inherited or acquired one. In this connection it is worthy to note, that we have never yet found any cases, either in this Institution or others so far as the writer has been able to learn, where a line of hereditary feeble-mindedness seems to have had its beginning. That is to say, no chart has ever been constructed where it is possible to say, that here it is evident that the feeble-mindedness began and here we see it has been transmitted.

It is also worthy of note that these three cases are all of so low grade that they never would marry even tho they were not in the Institution. If 297 cases have been settled, leaving only three undetermined, it is highly probable that if we could dig a little deeper we could find an adequate cause for these three.

We conclude, then, that our data offer practically no evidence of the spontaneous origin of hereditary feeble-mindedness. This, like so many other problems connected with the subject, must wait for further study and observations on these families in future generations. The families which we have investigated should be carefully watched for years to come.

### UNCLASSIFIED CASES

There remain 27 families in which we have not been able to get sufficient accurate information to warrant even a guess as to the cause of the feeble-mindedness of the child that is with us.

Lest it might seem that we have thrown these cases out without giving due weight to the facts they contain, we give a brief consideration to the conditions prevalent in these families.

There is the group in which some member in direct line was alcoholic. These are cases 301–307. With the exception of

Case 307 which has a mentality of two, these are all quite high grade — six, seven or eight years of mentality.

A glance at these charts will show the reader that there is no logical argument for alcohol as the cause of the condition. In Case 303 the father was alcoholic but neither his nor his parents' mental condition is determined. The mother is accounted normal with a question, and her parents are also undetermined. It is entirely possible that there might have been feeble-mindedness on either or both sides and that this is a case of true heredity.

Case 301 may seem a little stronger because all of the grandparents are normal, but since the condition of mental defect may skip a generation, the defect may be in the parents of Gus G. who are undetermined mentally, and here would be a case of true heredity. Any argument that might be thot to prevail for the alcoholism of the father is certainly negatived by the fact that by his first wife he had no feeble-minded children, but on the contrary two normals. The two deaths in infancy may possibly be credited to the alcohol.

Case 306 is interesting. The father is not only alcoholic but insane. The insanity is more likely to be closely connected with Frankie's condition than the alcohol. If one tried to maintain that the alcohol were the more potent cause, one is met by the fact that Frankie's uncle who was also alcoholic, marrying a normal woman, had a normal child. Certainly that case fairly offsets Frankie's.

Nor is there anything in the rest of the seven cases that offers anything stronger as an argument. Neither is the argument stronger when the whole group is considered; we have to remember that this total group numbers seven out of 327 cases. We conclude that we are committing no fallacy of composition when we say that there is not the slightest evidence that alcohol is the cause of feeble-mindedness in these cases. Then we recall the well-known fact that thousands of people are alcoholic who

have no feeble-minded children, we are ready to go further and to conclude that in these cases not only is there no evidence, but that there is not the slightest probability that the alcohol is the cause.

Cases 308 and 309 have been put together on the possibility of syphilis as the causal factor. In neither of these do we have a history of syphilis, altho in No. 308 the family physician thinks that the father was syphilitic. In both of them, however, the condition of the children is one that physicians everywhere recognize as characteristic of syphilitic parentage, namely, the non-viable and defective children.

In No. 308 there were two miscarriages, one was feeble-minded and one died in infancy, while in 309 two died in infancy, one was feeble-minded, one died at age of nine and one at the age of three.

Except for this recognized fact in regard to the condition of the children, there is no argument in these charts that syphilis is the cause of the condition, hence it is entirely possible that the individuals whose condition is undetermined may have been feeble-minded and these might therefore be cases of true heredity.

Cases 310 and 311 have apoplexy in the grandparents. It would seem as tho this condition might possibly be a contributing cause in these two cases, altho of course as with all of the charts in this group, the number of people whose condition is undetermined leaves it open to grave doubt as to whether there may not be either hereditary feeble-mindedness or other serious neuropathic conditions in the ancestors which would account for the condition.

There remain 16 cases where the data are too scanty to make it possible to suggest any cause whatever — Cases 312–327.

The reader will find after perusing these charts that some of them suggest some probability of their being hereditary feeble-mindedness, others neuropathic, others perhaps accident.

No. 327 for example, has cancer in the maternal grandfather,

but we have not been able to get the slightest indication that cancer is in any way connected with feeble-mindedness.

The same thing may be said of tuberculosis which occurs on several of these charts as well as in many others. We have kept the record of tuberculosis very carefully but the closest study fails to reveal any causal connection between that and feeble-mindedness.

Case 314. This is not a case of feeble-mindedness and strictly does not belong in this book, but we have kept it in as a good illustration of the problem.

This child was brot to The Training School as feeble-minded, but a careful study of his early history shows clearly that he is not suffering from feeble-mindedness but from insanity; that he was normal almost up to adolescence. It is further interesting in this connection that a study of his family history reveals no feeble-mindedness but does show some insanity in distant branches, also alcoholism, sexual immorality and brain disease — "paralysis."

This case is further suggestive as being very like the cases that are occasionally seen in Institutions and spoken of as idiots savants and this would seem to corroborate the suggestion made by Dr. Fernald that idiots savants are probably not feeble-minded but cases of dementia præcox or other forms of insanity.

# CHAPTER V

## DISCUSSION OF THE DATA

In the following pages are presented various groupings of the facts given in the case histories and such tabular statements as will help the reader to understand the most important relationships of those facts.

Table I shows the *average* number of persons represented on the family charts of each group. The actual number varies greatly, being determined partly by the number of members of the family that can be found, partly by the importance or lack of it, of collateral branches. As a rule we have attempted to follow each family until it was apparent that more extensive survey would not throw any further light on causes.

TABLE I

| GROUPS | FAMILIES (CHARTS) | TOTAL INDIVIDUALS ON CHARTS | AVERAGE NO. OF PERSONS PER CHART |
|---|---|---|---|
| Hereditary | 164 | 7937 | 48.4 |
| Probably Hereditary | 34 | 1252 | 36.8 |
| Neuropathic | 37 | 1348 | 36.4 |
| Accident | 57 | 2086 | 36.6 |
| No Cause | 8 | 299 | 37.3 |
| Unclassified | 27 | 789 | 29.2 |
| Totals | 327 | 13711 | 41.9 |

It is interesting to see from the Table that the *average* is nearly the same, 36, for all groups save the hereditary and the unclassified. The excess in the former is easily understood. When many feeble-minded individuals are found in a family it is impor-

tant to trace the history in many directions; back, to see if a beginning can be discovered; into collateral lines to see the effect of bringing in new blood. Hence these families average larger than the others. There are 6 families (all in the Hereditary Group) on which we have made special studies and the number of persons runs over a hundred each. In two cases it is over four hundred. One of these is the Kallikak Family[1] — not reproduced here except in the statistics.

If we leave out these 6 large families our average number of persons per chart becomes 39.8 for the Hereditary Group and 37.5 for the total.

Each individual represented on the chart is either: Normal (N); Feeble-minded (F); Questionably Normal (N?); Questionably Feeble-minded (F?); Cannot be decided (?); Undetermined (Un.); Died in infancy (d. inf.); Miscarriage (Mis.).

We have made no attempt to observe the medical distinction between miscarriage and abortion. Still birth is a miscarriage at 9 months. Died in infancy means died under 2 years.

The following Tables show the number of these in the different groups.

TABLE II

| GROUP | CHARTS | TOTAL PERSONS | N | F | N? | F? | ? | UN. | D. INF. | MIS. |
|---|---|---|---|---|---|---|---|---|---|---|
| H. | 164 | 7937 | 1323 | 1717 | 93 | 31 | 182 | 3602 | 714 | 275 |
| P.H. | 34 | 1252 | 393 | 78 | 9 | 8 | 6 | 628 | 74 | 56 |
| Neu. | 37 | 1348 | 516 | 44 | 8 | 0 | 19 | 632 | 92 | 37 |
| Acc. | 57 | 2086 | 1289 | 69 | 3 | 2 | 7 | 553 | 130 | 33 |
| N.C. | 8 | 299 | 217 | 10 | 0 | 0 | 0 | 54 | 15 | 3 |
| Uncl. | 27 | 789 | 258 | 28 | 2 | 0 | 2 | 423 | 64 | 12 |
| Totals | 327 | 13711 | 3996 | 1946 | 115 | 41 | 216 | 5892 | 1089 | 416 |

The 1946 feeble-minded are by sex 1041 males, 889 females and 16 sex unknown.

[1] See *The Kallikak Family* — Macmillan, 1912.

Omitting from the table the Unclassified Group, and subtracting from the total persons in each group the miscarriages and those who died in infancy, we have the following Table showing the number who survived the second year and the percentage the survivors in each group are of the total survivors, and the percentage of each group that survived.

TABLE III

| GROUP | TOTAL PERSONS | NO. WHO SURVIVED | % OF EACH GROUP WHO SURVIVED | % WHO SURVIVED |
|---|---|---|---|---|
| Hereditary | 7937 | 6868 | 86.5 | 60.3 |
| Probably H. | 1252 | 1115 | 89.0 | 9.7 |
| Neuropathic | 1348 | 1212 | 89.9 | 10.6 |
| Accident . | 2086 | 1913 | 91.7 | 16.7 |
| No Cause . | 299 | 281 | 93.9 | 2.4 |
| Totals | 12922 | 11389 | 83.0 | 100.0 |

The last column of this Table shows that 60.3% of all persons charted (except as above noted) are in the Hereditary Group, 9.7% are in the Probably Hereditary, 10.6% are in the Neuropathic, 16.7% are in the Accident, and 2.4% are in the No Cause Group. These percentages will be used for comparison in later tables.

These five *fundamental groups* (the sixth, being the unclassified, is omitted from most of our Tables) will be again subdivided for study purposes, according to the mentality of the parents as follows:

The first letter in each case indicates the father.

Both feeble-minded (abbreviated F — F); father normal, mother feeble-minded (N — F); the reverse (F — N); father undetermined and mother normal (Un. — N), and the reverse (N — Un.); father unknown and mother feeble-minded (Un. — F), and the reverse (F — Un.); both normal (N — N); both undetermined (Un. — Un.); nine groups in all.

## TABLE IV

SHOWING IN EACH GROUP THE CONDITION OF THE CHILDREN FOR EACH KIND OF MATING

### *Hereditary Group*

| PARENTS | NO. OF MATINGS | TOTAL CHILDREN | PER MATING | CONDITION OF CHILDREN | | | | |
|---|---|---|---|---|---|---|---|---|
| | | | | % F | % N | % d. inf. | % Mis. | % Un. |
| F—F . . . . | 144 | 749 | 5.2 | 63.5 | 0.8 | 14.9 | 4.9 | 15.7 |
| F—Un. . . . | 83 | 346 | 4.2 | 49.1 | 8.3 | 9.2 | 2.6 | 30.6 |
| Un.—F . . . | 216 | 1020 | 4.7 | 34.4 | 7.5 | 16.0 | 8.4 | 33.5 |
| N—F . . . | 54 | 247 | 4.6 | 35.2 | 19.0 | 10.1 | 9.3 | 26.3 |
| F—N . . . | 46 | 243 | 5.3 | 24.2 | 33.3 | 16.4 | 9.8 | 16.0 |
| N—N . . . | 100 | 470 | 4.7 | 7.2 | 58.2 | 8.7 | 5.7 | 20.0 |
| Un.—N . . . | 172 | 640 | 3.7 | 9.2 | 49.8 | 10.7 | 1.8 | 28.2 |
| N—Un. . . . | 100 | 383 | 3.8 | 7.0 | 65.0 | 8.1 | 2.1 | 17.7 |
| Un.—Un. . . | 430 | 2033 | 4.7 | 20.3 | 20.4 | 9.4 | 3.7 | 46.2 |
| Totals . . . | 1345 | 6131 | 4.5 | 27.3 | 24.4 | 11.5 | 4.9 | 31.8 |

### *Neuropathic Group*

| | | | | | | | | |
|---|---|---|---|---|---|---|---|---|
| N—N . . . . | 34 | 194 | 5.7 | 10.8 | 47.9 | 14.4 | 12.8 | 13.9 |
| Un.—N . . . | 64 | 254 | 4.0 | 5.1 | 57.0 | 9.8 | 5.1 | 22.8 |
| N—Un . . . | 33 | 105 | 3.2 | 2.8 | 76.1 | 9.6 | 1.9 | 9.6 |
| Un.—Un. . . | 55 | 251 | 4.6 | 2.7 | 45.4 | 6.7 | 2.7 | 42.2 |
| Totals . . . | 186 | 804 | 4.3 | 5.4 | 53.7 | 9.9 | 5.8 | 25.0 |

### *Accident Group*

| | | | | | | | | |
|---|---|---|---|---|---|---|---|---|
| N—N . . . . | 141 | 670 | 4.7 | 6.5 | 73.1 | 9.4 | 2.2 | 8.6 |
| Un.—N. . . . | 92 | 352 | 3.8 | 3.6 | 78.9 | 5.3 | 6.5 | 5.3 |
| N—Un. . . . | 70 | 224 | 3.2 | 0.8 | 86.1 | 3.1 | 0.4 | 9.3 |
| Un.—Un. . . | 57 | 249 | 4.4 | 2.8 | 52.2 | 10.8 | 2.0 | 32.1 |
| F—N . . . . | 1 | 6 | 6.0 | 16.6 | 83.3 | 0.0 | 0.0 | 0.0 |
| Totals . . . | 361 | 1501 | 4.1 | 4.4 | 73.0 | 7.7 | 2.9 | 11.8 |

TABLE IV — *Continued*

SHOWING IN EACH GROUP THE CONDITION OF THE CHILDREN FOR EACH KIND OF MATING

*No Cause Group*

| PARENTS | No. of Matings | Total Children | Per Mating | Condition of Children | | | | |
|---|---|---|---|---|---|---|---|---|
| | | | | % F | % N | % d. inf. | % Mis. | % Un. |
| N—N . . . . | 26 | 128 | 4.9 | 6.2 | 77.3 | 7.0 | 2.3 | 7.0 |
| Un.—N . . . | 12 | 36 | 3.0 | 0.0 | 94.4 | 2.7 | 0.0 | 2.7 |
| N—Un. . . . | 11 | 26 | 2.3 | 0.0 | 100.0 | 0.0 | 0.0 | 0.0 |
| Un.—Un. . . | 11 | 41 | 3.7 | 4.8 | 80.4 | 0.0 | 0.0 | 14.6 |
| Totals . : . | 60 | 231 | 3.8 | 4.3 | 83.1 | 4.3 | 1.2 | 6.9 |

*Unclassified Group*

| | | | | | | | | |
|---|---|---|---|---|---|---|---|---|
| N—N . . . . | 17 | 93 | 5.4 | 6.4 | 59.1 | 5.3 | 8.6 | 20.4 |
| Un.—N . . . | 26 | 94 | 3.6 | 7.4 | 64.8 | 6.3 | 1.0 | 20.2 |
| N—Un. . . . | 13 | 59 | 4.5 | 8.4 | 71.1 | 15.2 | 1.6 | 3.3 |
| Un.—Un. . . | 50 | 204 | 4.0 | 4.4 | 35.2 | 10.2 | 0.4 | 49.5 |
| Totals . . . | 106 | 450 | 4.2 | 6.0 | 51.1 | 9.1 | 2.4 | 31.3 |

*Totals*

| | | | | | | | | |
|---|---|---|---|---|---|---|---|---|
| Hereditary<br>Probably H. | 1345 | 6131 | 4.5 | 27.3 | 24.4 | 11.5 | 4.9 | 31.8 |
| Neuropathic | 186 | 804 | 4.3 | 5.4 | 53.7 | 9.9 | 5.8 | 25.0 |
| Accident | 361 | 1501 | 4.1 | 4.4 | 73.0 | 7.7 | 2.9 | 11.8 |
| No Cause | 60 | 231 | 3.8 | 4.3 | 83.1 | 4.3 | 1.2 | 6.9 |
| Unclassified | 106 | 450 | 4.2 | 6.0 | 51.1 | 9.1 | 2.4 | 31.3 |
| Grand Total | 2058 | 9117 | 4.4 | 20.0 | 37.7 | 10.4 | 4.4 | 27.3 |

If we subtract from the total children the deaths in infancy and the miscarriages we get the number of children per mating who survived infancy.

This for each group is as follows:

| | | |
|---|---|---|
| Heredity 3.8 | Neuropathic 3.6 | Accident 3.7 |
| No Cause 3.6 | Unclassified 3.7 | Total 3.7 |

*Explanation of Table IV.* The fundamental groups are indicated by the headings Hereditary, etc. (In this Table and elsewhere, when no *Prob. Hered.* group is given, it has been combined with the certainly Hereditary, to make one *Hereditary Group.*)

The first column shows the mental condition of the parents.

The second column the number of *matings* in the group.

The third column shows the number of offspring from those matings.

The fourth column shows the number of offspring per mating.

The remaining columns give the percentage of the children that were feeble-minded, normal, died in infancy, miscarriages and mentality undetermined. *E.g.* the first line of the Table shows that in the Hereditary Group there were 144 matings where the parents were both feeble-minded (F — F). These 144 matings resulted in 749 offspring, an average of 5.2% offspring per mating, 63.5% of these offspring were feeble-minded; 0.8% were normal; 14.9% died in infancy; 4.9% were miscarriages and 15.7% were of undetermined mentality.

*Cautions.* Owing to the incompleteness of our data certain cautions are necessary in using the Tables. *E.g.* in Table IV are given the per cent of miscarriages and deaths in infancy. These figures are not directly comparable with the usual statistics on these two items.

First: "died in infancy" includes all under *two* years instead of under one year as is more frequent. We have followed in this the recommendations of the committee of the American Association for the Study of the Feeble-minded. (See Eugenics Record Office Bulletin No. 2.)

Second: in Table IV (and others) the *matings* and *children* include those in earlier generations as well as the present. Experience indicates that we do not get all the miscarriages and probably not all of the "died in infancy" in the earlier generations. They have been so thoroly forgotten that they are not reported. Hence our "total children" is more nearly total *surviving* children. Our "children per mating" is more nearly the average number per mating *surviving*. These facts will account for the difference between our figures and those usually given for the general population.

The following Table gives the corresponding figures for the present generation and the immediate family of "our child." These can be relied on as correct to a high degree.

TABLE V

SHOWING THE DISTRIBUTION OF OUR CHILDREN AND THEIR SIBS IN THE FIVE FUNDAMENTAL GROUPS

| GROUP | NO. OF MATINGS | TOTAL CHILDREN | PER MATING | CONDITION OF CHILDREN | | | | | |
|---|---|---|---|---|---|---|---|---|---|
| | | | | F | N | ? | d. inf. | Mis. | Un. |
| Hereditary | 164 | 978 | 5.9 | 403 | 82 | 32 | 182 | 135 | 144 |
| Probably H. | 34 | 161 | 4.7 | 47 | 27 | 2 | 9 | 37 | 39 |
| Neuropathic | 37 | 201 | 5.4 | 43 | 75 | 2 | 29 | 27 | 25 |
| Accident | 57 | 272 | 4.7 | 58 | 152 | 2 | 33 | 13 | 14 |
| No Cause | 8 | 46 | 5.7 | 8 | 31 | 0 | 3 | 3 | 1 |
| Unclassified | 27 | 118 | 4.3 | 26 | 34 | 1 | 19 | 10 | 28 |
| Totals | 327 | 1776 | 5.4 | 585 | 401 | 39 | 275 | 225 | 251 |

In the foregoing Table is given the average children per mating. If we wish, however, to get an idea of the fecundity of these groups of women we must make some corrections. Many of these women have had more than one mate (legal or otherwise); a few have been deserted or died early.

Making these corrections we get the following:

| Group | No. Mothers | No. Children | Average |
|---|---|---|---|
| Hereditary . . . . . | 139 | 992 | 7.1 |
| Probably Hereditary . . | 27 | 168 | 6.2 |
| Neuropathic . . . . . | 36 | 204 | 5.6 |
| Accident . . . . . | 50 | 258 | 5.1 |
| No Cause . . . . . | 8 | 46 | 5.7 |
| Unclassified . . . . . | 27 | 118 | 4.3 |
| Totals . | 287 | 1786 | 6.2 |

In addition to the mentality, whether normal or feeble-minded, record has been kept of certain diseases and conditions supposed to be more or less associated with feeble-mindedness in a causal relation. These are the following:

1. Alcohol (A); 2. Tuberculosis (T); 3. Sexual immorality (Sx.); 4. Paralysis (Par.); 5. Insanity (I); 6. Epilepsy (E); 7. Neurotic condition (Neu.); 8. Syphilis (Sy); 9. Criminality (C); 10. Deafness (D); 11. Blindness (B); 12. Migraine (M); 13. Goitre (G); 14. Vagrancy (W). Records have been kept besides of Inmates of other Institutions, and Illegitimate children.

Table VI shows the distribution of these conditions in the fundamental groups. The corresponding percentages will be found with each topic as it is taken up.

Table VI

| Group | A | T | Sx. | Par. | I | E | Neu. | Sy | C | D | B | M | G | W | In Inst. | Illeg. Ch. |
|---|---|---|---|---|---|---|---|---|---|---|---|---|---|---|---|---|
| H. | 272 | 187 | 258 | 58 | 54 | 56 | 22 | 35 | 37 | 23 | 28 | 4 | 3 | 4 | 119 | 259 |
| P.H. | 29 | 59 | 8 | 19 | 20 | 5 | 23 | 3 | 5 | 5 | 1 | 2 | 3 | 0 | 12 | 12 |
| Neu. | 33 | 36 | 17 | 46 | 32 | 13 | 15 | 4 | 3 | 11 | 3 | 7 | 1 | 1 | 16 | 3 |
| Acc. | 29 | 39 | 5 | 22 | 4 | 4 | 11 | 3 | 0 | 6 | 2 | 0 | 0 | 2 | 2 | 4 |
| N.C. | 2 | 3 | 0 | 6 | 0 | 1 | 0 | 1 | 0 | 0 | 0 | 0 | 0 | 0 | 0 | 0 |
| Uncl. | 10 | 20 | 5 | 3 | 9 | 0 | 4 | 0 | 0 | 0 | 0 | 0 | 1 | 0 | 8 | 1 |
| Totals | 375 | 344 | 293 | 154 | 119 | 79 | 75 | 46 | 45 | 45 | 34 | 13 | 8 | 7 | 157 | 279 |

These sixteen conditions will now be considered in the light of our data.

## ALCOHOLISM

This chapter does not enter into a full discussion of the question of alcohol but merely presents our data so that the reader may see for himself what they show on this question.

Tables VII, VIII, IX, X show the facts as we have been able to work them out. We have not included any cases that are complicated by the presence of Sy, I, Par., and E. As already shown in a previous chapter on the analysis and classification of the cases we have no family charts upon which there is conclusive evidence that the condition of the child in question was due to alcohol. There are a few charts in which there is much alcoholism in the family and one is led to ask — Did not the alcohol cause the feeble-mindedness in these cases? But when we look closer we find that it is impossible to draw that conclusion logically, because not enough is known about the other conditions of the family. In many cases it is not known but that the alcoholic father or mother may have been also feeble-minded. In the entire group of charts where hereditary feeble-mindedness prevails, it is of course not possible to draw any conclusion in regard to alcohol since the feeble-mindedness of the ancestors is the all sufficient cause of the feeble-mindedness of the child. We must look for any arguments to be found in the Neuropathic Ancestry or the Accident Group.

Alcoholism at the Time of Conception. Many people believe that the condition of the father or the mother in reference to alcohol at the time of conception is significant. Such persons are, as a rule, ignorant of the principles of modern biology and their opinion is based upon an incomplete understanding of the processes by which a new organism is formed. One of the best demonstrated facts in biology is that the germ cell is most carefully protected from all injurious influences, it lives what someone has termed a "charmed existence." That any amount of alcohol which a father had taken immediately pre-

vious to the conception of a child could so permeate the system as to reach the germ cell and so affect it that the result would be shown in the offspring is well nigh inconceivable from a biological standpoint.

Dr. Stockard has indeed shown that, if the eggs of fish are placed in a solution of alcohol within a short time after fertilization, monstrosities result. But no one, so far as the writer knows, has shown that the spermatozoa of any animal, placed in an alcoholic solution and then allowed to fertilize the ova, transmit any peculiarity whatever to the offspring.

Ireland makes the statement that in the villages in Scotland where the whole population gets drunk at New Year, or at the time of the return of the fishermen, "No one has noticed that there is an excess of defectives born nine months after this time"; this argument has never been answered. It has been asserted that in somewhat similar conditions in Switzerland there are more defectives; but in this case other factors have not been eliminated. Therefore Ireland's argument stands. He says, page 21: "The children of drunken parents in many cases have an unhealthy nervous system, they are weak, unsteady and excitable,and often have a diseased craving for spirituous liquors, but in my opinion idiocy is not the ordinary legacy which drunkards leave to their children."

Tredgold says, page 19, after quoting Dr. Ireland's statement above referred to, "I have histories of idiots conceived under such circumstances, but so I have of normal children, and my opinion is, that while this may be a cause in some cases, the number of instances in this country at any rate is exceedingly small." So far as our field workers have been able to get any information it would tend to confirm the above view.

THE CHILDREN OF THE HABITUAL DRUNKARD. Passing from the question of alcoholism at the time of conception to the general question of alcoholism as a cause of mental defect, we will first examine the parents of our own children.

The following Table shows the condition of the *parents of our children* in regard to alcohol, paralysis, epilepsy, insanity and syphilis, and the percentage of their children that were normal, feeble minded, etc.

TABLE VII

SHOWING THE CONDITION OF PARENTS OF OUR CHILDREN IN REGARD TO ALCOHOL, ETC.

*Hereditary Group — 164 Cases*

| Condition of Parents | No. of Matings | Total Children | Condition of Children | | | | | |
|---|---|---|---|---|---|---|---|---|
| | | | % F | % N | % ? | % d. inf. | % Mis. | Un. |
| Non A . . . | 78 | 449 | 39.1 | 9.5 | 4.0 | 16.0 | 14.2 | 16.9 |
| A . . . | 57 | 365 | 40.2 | 6.3 | 3.0 | 22.5 | 16.1 | 11.8 |
| Par., E, I, or Sy | 29 | 164 | 48.7 | 9.7 | 1.7 | 17.0 | 7.3 | 15.2 |
| Totals | 164 | 978 | 41.2 | 8.3 | 3.2 | 18.6 | 13.8 | 14.7 |

*Probably Hereditary Group — 34 Cases*[1]

| | | | | | | | | |
|---|---|---|---|---|---|---|---|---|
| Non A . . . | 16 | 81 | 28.3 | 22.2 | — | 1.2 | 30.8 | 17.3 |
| A . . . | 7 | 29 | 30.7 | 3.4 | — | 3.4 | 24.1 | 37.9 |
| Par., E, I, or Sy | 11 | 51 | 29.4 | 15.7 | 3.9 | 13.7 | 9.8 | 27.4 |
| Totals | 34 | 161 | 29.1 | 16.7 | 1.2 | 5.5 | 22.9 | 24.2 |

*Neuropathic Group — 37 Cases*

| | | | | | | | | |
|---|---|---|---|---|---|---|---|---|
| Non A . . . | 17 | 72 | 26.3 | 40.2 | — | 9.8 | 9.8 | 13.8 |
| A . . . | 7 | 52 | 17.3 | 42.2 | — | 13.4 | 21.1 | 5.7 |
| Par., E, I, or Sy | 13 | 77 | 19.4 | 31.1 | 2.5 | 19.4 | 11.6 | 15.5 |
| Totals | 37 | 201 | 21.3 | 37.3 | 0.9 | 14.4 | 13.4 | 12.4 |

*Accident Group — 57 Cases*

| | | | | | | | | |
|---|---|---|---|---|---|---|---|---|
| Non A . . . | 41 | 191 | 21.4 | 58.1 | 1.0 | 11.5 | 3.6 | 4.1 |
| A . . . | 9 | 51 | 19.6 | 52.9 | — | 7.8 | 9.8 | 9.8 |
| Par., E, I, or Sy | 7 | 30 | 23.3 | 46.6 | — | 23.3 | 3.3 | 3.3 |
| Totals | 57 | 272 | 21.3 | 55.8 | 0.6 | 12.1 | 4.7 | 5.1 |

TABLE VII — *Continued*

SHOWING THE CONDITION OF PARENTS OF OUR CHILDREN IN REGARD TO ALCOHOL, ETC.

*No Cause Group — 8 Cases*

| CONDITION OF PARENTS | NO. OF MATINGS | TOTAL CHILDREN | CONDITION OF CHILDREN | | | | | |
|---|---|---|---|---|---|---|---|---|
| | | | % F | % N | % ? | % d. inf. | % Mis. | Un. |
| Non A . . . | 8 | 46 | 17.4 | 67.4 | 0 | 6.5 | 6.5 | 2.1 |
| A . . . | 0 | 0 | 0 | 0 | 0 | 0 | 0 | 0 |

*Totals*

| | | | | | | | | |
|---|---|---|---|---|---|---|---|---|
| Non A . . . | 160 | 839 | 31.8 | 27.6 | 2.3 | 12.5 | 12.6 | 12.9 |
| A . . . | 80 | 497 | 35.2 | 14.6 | 2.2 | 18.9 | 16.4 | 12.4 |
| Par., E, I, or Sy | 60 | 322 | 36.3 | 19.2 | 2.1 | 17.7 | 8.3 | 16.1 |
| Grand Totals | 300 | 1658 | 33.7 | 22.1 | 2.3 | 15.4 | 12.7 | 13.4 |

*Explanation of Table VII.* — The first line reads as follows: In the Hereditary Group 78 of our children had parents who were not alcoholic. These parents had 449 children (including "*our child*"). Of these children 39.1 % were feeble-minded; 9.5 % were normal, etc.

It will be noted that in the totals the percentage of feeble-minded steadily decreases as we go thru the groups, from 41.2 in Hereditary to 29.1, 21.3 and 21.3 while the percentage of normal goes up from 8.3 in Hereditary to 16.7, 37.3 and 55.8.

The percentage of feeble-minded is slightly greater in the alcoholic group than in the non-alcoholic, in the Hereditary and Probably H. groups, but in the other two groups it is less.

There seems to be no conclusion to be drawn from the data in this form, as regards the effect of alcohol.

Of our 310[1] children comprising this study, 80 have parents

[1] Omitting the unclassified there are 300 matings; ten of these have two children each in the Training School.

one or both of whom are alcoholic. In 18 cases or 5.5 % the mother was alcoholic, and in 10 cases father and mother both were alcoholic. Of the 18 cases all but one are in the Hereditary Group. That one, Case 268, has been placed in the Accident Group (causes acting after birth) since the child herself was fed on alcohol from infancy and was known to have been often drunk. Altho we cannot be sure that there was not hereditary feeble-mindedness here, yet the probabilities seem to be against it, and one has a strong feeling that without the alcohol the child would have been normal. There is not, therefore, a single case among our children in which it can be said that the alcoholism of the mother was clearly the cause of the feeble-mindedness of the child.

These 18 cases are Nos. 1, 4, 8, 44, 46, 53, 57, 62, 73, 74, 87, 95, 124, 125, 151, 156, 191, 268.

The question naturally arises as to the mentality of these cases, whether or not the alcohol in the mother, if it has not produced feeble-mindedness, may still be credited with having produced a lower grade of feeble-mindedness than would otherwise have occurred. While this study gives no positive answer to this, yet it reveals the following: of the 18 under discussion 5 are of the moron grade, 11 of the imbecile, 2 of the idiots. This is approximately the usual distribution of a group of cases, with a little preponderance in favor of the higher grade. From this there is no evidence that the alcohol has even lowered the grade of the child. Two of these cases are among the highest grade children in the Institution.

If alcohol in the mother, where it conceivably might affect the fetus thru the mother's nutrition, does not produce feeble-mindedness or does not lower the grade of the children, it would not seem likely that the father's alcoholism, which can only affect the offspring thru his germ cells, could produce feeble-mindedness.

The reader will note that this conclusion is *not* that alcoholism of the mother does not cause feeble-mindedness in the child, but simply that the fact is not proved from our data.

There remain 62 of our children whose *fathers* are alcoholic; 47 of these are in the Hereditary Group; 7 are in the Neuropathic; 8 are in the Accident. Table VII shows that in the Non-hereditary Groups these A parents have a smaller percentage of feeble-minded children than the Non-A parents in the same groups. In both the number of alcoholics is small. In no case is the alcoholism of the parent given, by parent or physician, as the cause of the child's condition. In every case there is a cause given that is more generally accepted than the alcohol. It is, of course, possible that the alcoholism of the fathers may have rendered the children more susceptible to the conditions in some of the cases. For example in the Accident Group, one case is that of a hydrocephalic boy (No. 278), one is a meningitis case (No. 281), two are Mongolian imbeciles (Nos. 250, 260), one is a case of "medicine" administered to produce abortion (No. 239), another is a case of supposed lead poisoning (No. 247), another is typhoid fever (No. 266) and another spastic paralysis (No. 272).

We are therefore compelled to admit that so far as our own children are concerned we cannot prove that alcohol caused their feeble-mindedness in the Non-hereditary Groups any more than in the Hereditary.

That alcohol causes deaths and miscarriages is nowhere more convincingly shown than in Table VII. Referring as it does to our own children — the present generation — the statistics of deaths in infancy and miscarriages are very reliable. A study of these figures shows a considerably higher percentage wherever the number of matings is great enough to give a fair average. This is corroborated so far as the difference between alcoholic and non-alcoholic is concerned, by the figures of Table IX, which covers all matings.

We turn now from our own children and their parents to a consideration of all the persons on all the charts, in relation to alcohol.

A count of all the charts gives us the following:

TABLE VIII

| | | |
|---|---|---|
| Of 6868 Persons in Hereditary Group | 272 or 3.96% | are Alcoholic |
| Of 1115 Persons in Probably H. Group | 29 or 2.60% | are Alcoholic |
| Of 1212 Persons in Neuropathic Group | 33 or 2.72% | are Alcoholic |
| Of 1913 Persons in Accident Group | 29 or 1.51% | are Alcoholic |
| Of 281 Persons in No Cause Group | 2 or 0.10% | are Alcoholic |
| Of 11389 Persons in all Groups | 365 or 3.20% | are Alcoholic |

"Alcoholic" thruout this study means drunkard.

Table VIII shows us the number of each group that are alcoholic and the per cent that this is of the total group. Referring to the figures we see that a larger percentage of the Hereditary Group are alcoholic than is found in any other group, and larger than the average of all the groups. Practically 4 % (3.96 %) of all persons listed in the Hereditary Group are alcoholic, while of the 281 persons in the group where we can find no cause for the condition of feeble-mindedness, only .1 of 1 % are alcoholic. This of course agrees exactly with what we would expect.

If there is no influence producing alcoholism in one group more than another these 365 cases should be found in the different groups in the proportion of the whole number of persons in those groups or 60.3 : 9.7 : 10.6 : 16.7 : 2.4. (See Table III for the H., P. H., Neu., Acc. and N. C. Groups respectively.)

For example, if all of the alcoholics were proportionately divided among the groups we should expect 220 in the Hereditary Group. There are really 272, that is, there are 52 more persons in this group than an even distribution would warrant, which means that there is some influence in the situation producing more alcoholics in this group than in the others. What that something is, is the lack of control characteristic of those persons that belong to families where there is hereditary feeble-mindedness.

The following table shows what would be expected compared with what we actually find.

| Group | Expectation | Actual | Too Many | Too Few |
|---|---|---|---|---|
| Hereditary . . . . . | 220 | 272 | 52 | |
| Probably Hereditary . . | 36 | 29 | | 7 |
| Neuropathic . . . . . | 39 | 33 | | 6 |
| Accident . . . . . | 61 | 29 | | 32 |
| No Cause . . . . . | 9 | 2 | | 7 |

A decided relation between Alcoholism and Hereditary Feeble-mindedness! Is it a causal relation? If so, which is cause and which is effect?

TABLE IX

COMPARING THE FAMILIES OF ALCOHOLIC AND NON-ALCOHOLIC PARENTS OF THE SAME MENTAL CONDITION

*Hereditary Cases*

| Condition of Parents | | No. of Matings | Total Children | Per Mating | Condition of Children | | | | |
|---|---|---|---|---|---|---|---|---|---|
| | | | | | % F | % N | %d. inf. | % Mis. | % Un. |
| F—F | Non A | 90 | 445 | 4.9 | 66.7 | 0.7 | 14.4 | 3.5 | 14.6 |
| | A | 36 | 216 | 6.0 | 59.2 | 0.9 | 14.8 | 6.9 | 18.5 |
| N—F | Non A | 45 | 204 | 4.5 | 31.8 | 21.5 | 8.7 | 9.7 | 27.8 |
| | A | 5 | 16 | 3.2 | 56.2 | 18.7 | 18.7 | 0.0 | 6.2 |
| F—N | Non A | 31 | 142 | 4.5 | 23.0 | 39.4 | 14.7 | 4.2 | 18.3 |
| | A | 12 | 78 | 6.5 | 26.9 | 29.4 | 21.7 | 7.6 | 14.1 |
| Un—F | Non A | 142 | 561 | 3.9 | 35.4 | 9.9 | 13.1 | 6.9 | 35.2 |
| | A | 53 | 337 | 6.3 | 31.1 | 5.6 | 21.6 | 11.8 | 29.6 |
| F—Un | Non A | 59 | 237 | 4.0 | 50.6 | 10.5 | 7.1 | 2.1 | 29.5 |
| | A | 14 | 65 | 4.6 | 50.7 | 3.0 | 15.3 | 4.6 | 26.1 |
| N—N | Non A | 92 | 433 | 4.7 | 6.6 | 60.4 | 8.5 | 3.6 | 21.1 |
| | A | 4 | 19 | 4.7 | 5.2 | 21.0 | 15.7 | 42.1 | 15.7 |
| Un—N | Non A | 146 | 488 | 3.3 | 6.9 | 55.9 | 7.7 | 1.2 | 28.0 |
| | A | 19 | 117 | 6.0 | 14.5 | 28.2 | 23.9 | 2.5 | 30.7 |
| N—Un | Non A | 87 | 316 | 3.6 | 4.1 | 70.5 | 5.3 | 2.5 | 17.4 |
| | A | 4 | 20 | 5.0 | 19.9 | 29.9 | 14.9 | 0.0 | 34.9 |
| Un—Un | Non A | 328 | 1446 | 4.4 | 20.4 | 23.0 | 7.9 | 3.1 | 45.2 |
| | A | 54 | 279 | 5.1 | 25.8 | 12.8 | 16.8 | 6.4 | 38.7 |
| Totals | Non A | 1020 | 4272 | 4.1 | 25.4 | 29.7 | 9.2 | 3.7 | 31.6 |
| | A | 201 | 1147 | 5.7 | 33.8 | 11.1 | 18.8 | 8.1 | 28.0 |

TABLE IX — *Continued*

COMPARING THE FAMILIES OF ALCOHOLIC AND NON-ALCOHOLIC PARENTS OF THE SAME MENTAL CONDITION

*Neuropathic Cases*

| CONDITION OF PARENTS | | NO. OF MATINGS | TOTAL CHILDREN | PER MATING | CONDITION OF CHILDREN | | | | |
|---|---|---|---|---|---|---|---|---|---|
| | | | | | % F | % N | %d.inf. | % Mis. | % Un. |
| N—N | Non A | 21 | 110 | 5.2 | 9.0 | 49.0 | 13.6 | 6.3 | 21.8 |
| | A | 4 | 32 | 8.0 | 9.3 | 56.2 | 3.1 | 31.2 | 0.0 |
| Un—N | Non A | 44 | 127 | 2.9 | 3.9 | 68.5 | 3.9 | 6.2 | 17.3 |
| | A | 6 | 30 | 5.0 | 20.0 | 43.3 | 20.0 | 3.3 | 13.3 |
| N—Un | Non A | 26 | 76 | 2.9 | 2.6 | 89.4 | 0.0 | 0.0 | 7.8 |
| | A | 1 | 2 | 2.0 | 0.0 | 100.0 | 0.0 | 0.0 | 0.0 |
| Un—Un | Non A | 32 | 122 | 3.8 | 1.6 | 59.8 | 2.4 | 4.9 | 31.1 |
| | A | 2 | 9 | 4.5 | 0.0 | 11.1 | 0.0 | 0.0 | 88.9 |
| Totals | Non A | 123 | 435 | 3.5 | 4.3 | 64.8 | 5.2 | 4.8 | 20.6 |
| | A | 13 | 73 | 5.6 | 12.3 | 46.5 | 9.5 | 15.0 | 16.4 |

*Accident Cases*

| | | | | | | | | | |
|---|---|---|---|---|---|---|---|---|---|
| N—N | Non A | 130 | 614 | 4.7 | 6.1 | 72.9 | 9.7 | 2.2 | 8.7 |
| | A | 3 | 17 | 5.7 | 17.6 | 70.5 | 5.8 | 0.0 | 5.8 |
| Un—N | Non A | 80 | 302 | 3.7 | 1.9 | 83.7 | 3.9 | 5.9 | 4.3 |
| | A | 8 | 32 | 4.0 | 15.6 | 56.2 | 9.3 | 12.4 | 6.2 |
| N—Un | Non A | 66 | 206 | 3.1 | 0.4 | 87.8 | 2.9 | 0.4 | 8.7 |
| | A | 0 | — | — | — | — | — | — | — |
| Un—Un | Non A | 44 | 177 | 4.0 | 2.2 | 48.0 | 12.9 | 0.6 | 36.1 |
| | A | 3 | 17 | 5.7 | 11.7 | 64.7 | 0.0 | 5.8 | 17.6 |
| F—N | Non A | 1 | 6 | 6.0 | 16.6 | 83.3 | 0 | 0 | 0 |
| | A | 0 | — | — | — | — | — | — | — |
| Totals | Non A | 321 | 1305 | 4.1 | 3.8 | 74.3 | 7.7 | 2.6 | 11.4 |
| | A | 14 | 66 | 4.7 | 15.1 | 62.1 | 6.0 | 7.5 | 9.0 |

TABLE IX — *Continued*

COMPARING THE FAMILIES OF ALCOHOLIC AND NON-ALCOHOLIC PARENTS OF THE SAME MENTAL CONDITION

*No Cause*

| CONDITION OF PARENTS | | NO. OF MATINGS | TOTAL CHILDREN | PER MATING | CONDITION OF CHILDREN | | | | |
|---|---|---|---|---|---|---|---|---|---|
| | | | | | % F | % N | %d.inf. | % Mis. | % Un. |
| N—N | Non A | 20 | 102 | 5.1 | 7.8 | 83.3 | 6.8 | 2.9 | 0.9 |
| | A | 2 | 7 | 3.5 | 0.0 | 85.7 | 14.2 | 0.0 | 0.0 |
| Un—N | Non A | 12 | 36 | 3.0 | 0.0 | 94.4 | 2.7 | 0.0 | 2.7 |
| | A | 0 | — | — | — | — | — | — | — |
| N—Un | Non A | 11 | 26 | 2.3 | 0.0 | 100.0 | 0.0 | 0.0 | 0.0 |
| | A | 0 | — | — | — | — | — | — | — |
| Un—Un | Non A | 7 | 28 | 4.0 | 3.5 | 82.1 | 0.0 | 0.0 | 14.2 |
| | A | 1 | 1 | 1.0 | 0.0 | 100.0 | 0.0 | 0.0 | 0.0 |
| Totals | Non A | 50 | 192 | 3.8 | 4.6 | 86.4 | 4.1 | 1.5 | 3.1 |
| | A | 3 | 8 | 2.7 | 0.0 | 87.5 | 12.5 | 0.0 | 0.0 |

*Totals*

| | | | | | | | | | |
|---|---|---|---|---|---|---|---|---|---|
| Hered. | Non A | 1020[1] | 4272 | 4.1 | 25.4 | 29.7 | 9.2 | 3.7 | 31.6 |
| | A | 201 | 1147 | 5.7 | 33.8 | 11.1 | 18.8 | 8.1 | 28.0 |
| Neu. | Non A | 123 | 435 | 3.5 | 4.3 | 64.8 | 5.2 | 4.8 | 20.6 |
| | A | 13 | 73 | 5.6 | 12.3 | 46.5 | 9.5 | 15.0 | 16.4 |
| Acc. | Non A | 321 | 1305 | 4.1 | 3.8 | 74.3 | 7.7 | 2.6 | 11.4 |
| | A | 14 | 66 | 4.7 | 15.1 | 62.1 | 6.0 | 7.5 | 9.0 |
| N. C. | Non A | 50 | 192 | 3.8 | 4.6 | 86.4 | 4.1 | 1.5 | 3.1 |
| | A | 3 | 8 | 2.7 | 0.0 | 87.5 | 12.5 | 0.0 | 0.0 |
| Unclass. | Non A | 92 | 400 | 4.3 | 5.0 | 53.5 | 8.0 | 2.7 | 30.7 |
| | A | 9 | 22 | 2.5 | 27.2 | 27.2 | 18.1 | 0.0 | 27.2 |
| Grand Totals | Non A | 1606 | 6604 | 4.1 | 17.9 | 43.9 | 8.5 | 3.5 | 26.0 |
| | A | 240 | 1316 | 5.5 | 31.3 | 16.4 | 17.6 | 8.2 | 26.2 |

[1] In Hereditary Group 1 mating resulting in 18 children is omitted, because of suspected Sy.

In Table IX we have our fundamental groups. In each of these we have subdivided the cases by *matings*. These subdivisions are on the basis of the mental condition of parents. For example, (F — F) means father feeble-minded, mother feeble-minded; (N — F) means father normal, mother feeble-minded. Each of these groups is again subdivided into those matings where one or both of the parents were alcoholic and those where neither was alcoholic.

From this Table we find some interesting facts. If alcoholism cannot be proved to directly produce feeble-mindedness may it be that it at least has some influence in that direction?

Taking the first line in Table IX we have the following figures:

Both parents are feeble-minded; of the non-alcoholic group there were 90 matings resulting in 445 offspring, which is an average of 4.9 children per mating. Of these 445 children, 66.7 % were feeble-minded; .7 of 1 % were normal; 14.4 % died in infancy; 3.5 % resulted in miscarriages; 14.6 % are undetermined. With these figures we can compare the corresponding figures for the group of the same kind of matings, that is, father and mother both feeble-minded but one or the other alcoholic. Here we have only 36 matings resulting in 216 children, that is 6 per mating, an average of one child more than in the non-alcoholic group.

From a study of the matings it will be seen that there are more children per mating in the alcoholic families; there are only two exceptions and in both of these the number of matings in the alcoholic group was very small. We may make it therefore as a generalization that in alcoholic families the average number of children is about one more than in the non-alcoholic families.

Looking at the condition of the children we find that there are nearly as many feeble-minded in the alcoholic as in the non-alcoholic group. That is, we have 59.2 in the alcoholics whereas there were 66.7 in the non-alcoholics. The number that died in infancy is practically the same in both. The number of miscarriages is, however, practically doubled in the alcoholic group. The undetermined are only a few more in the alcoholic group.

In the same way the reader can compare the alcoholic group with the non-alcoholic group for each kind of mating. Unfortunately the number of matings for the alcoholic group is usually

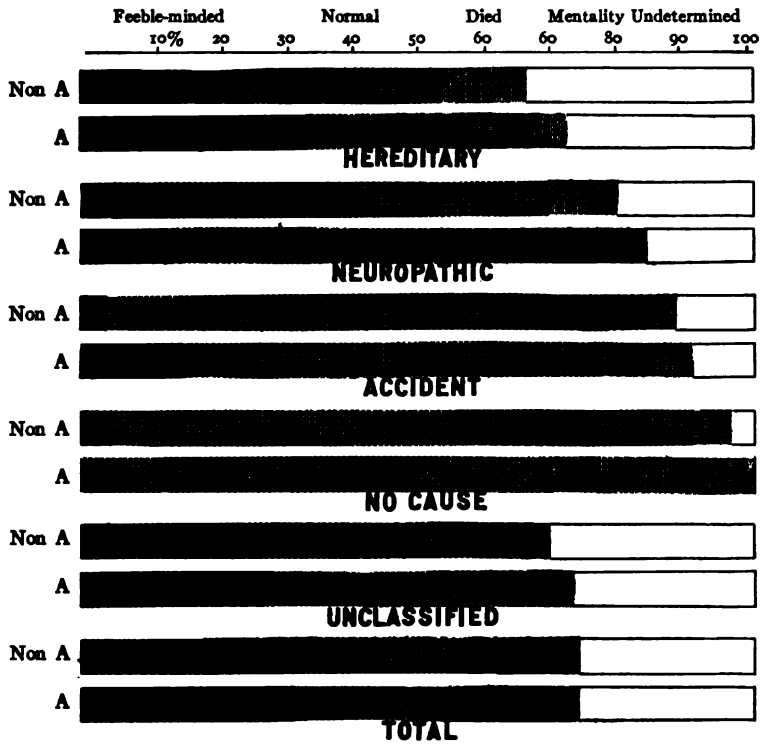


Diagram showing the relative proportion of children who were defective, normal, died in infancy (including miscarriage), and undetermined, in families that were Alcoholic as compared with the same in families that were Non-alcoholic. Based on the totals of Table IX.

small and in several instances too small to be really valuable. This should be borne in mind in making the comparisons.

In several instances it will be seen that the number of feeble-minded children is considerably larger in the alcoholic group than in the non-alcoholic. Corresponding to this we find that as a

rule the number of normal children in the alcoholic group is less than in the non-alcoholic.

Taking from Table IX the (N — N) matings in each of the fundamental groups we find that out of 276 matings where both parents are known to be normal there are only 13 cases where there is alcoholism in one or both of the parents. It is interesting to note that in these cases the children are as a rule *not all feeble-minded.* Assuming that alcohol causes feeble-mindedness, how shall we account for a family where the father or mother is alcoholic, having two to five children only one of whom is feeble-minded? If the defective one was the last born it might be argued that the poison of the alcohol was cumulative, but he is not always the last born. Perhaps it may be said that the father reformed after the feeble-minded child was born. This is not the case. Wherever the parent has reformed in his habits that fact has been noted and such expressions as "once alcoholic" or "alcoholic early in life" are found on our charts.

The following shows the condition of the children in the 13 cases where *both parents were normal mentally and one or the other alcoholic.*

| Chart | Number of Children | Condition of Children | | | | |
|---|---|---|---|---|---|---|
| | | F | N | d. inf. | Mis. | Un. |
| 9 | 2 | 0 | 2 | | | |
| 14 | 9 | 1 | 0 | 0 | 8 | 0 |
| 73 | 6 | 0 | 0 | 3 | 0 | 3 |
| 161 | 2 | 0 | 2 | | | |
| 201 | 13 | 1 | 6 | 0 | 6 | 0 |
| 211 | 2 | 1 | 0 | 0 | 1 | 0 |
| 213 | 11 | 1 | 6 | 1 | 3 | 0 |
| 233 | 6 | 0 | 6 | | | |
| 260 | 4 | 1 | 2 | 1 | 0 | 0 |
| 278 | 8 | 1 | 7 | | | |
| 281 | 5 | 1 | 3 | 0 | 0 | 1 |
| 299 | 5 | 0 | 5 | | | |
| 299 | 5 | 0 | 4 | 1 | 0 | 0 |
| Totals | 78 | 7 | 43 | 6 | 18 | 4 |

As an argument for alcohol there is nothing here.

There are 126 matings in the Hereditary Group (Table IX, page 481), where both parents were feeble-minded. The children of these matings are of course practically all feeble-minded, but that is because their parents are feeble-minded and not because their parents were alcoholic. In 36 of these matings one or both mates were alcoholic. These are 28.5 % of all the matings in this group. Our 13 (N — N) matings were only 4.7 % of their group. Therefore the proportion of alcoholics in the (F — F) matings is more than six times as great as in the (N — N) matings.

Table IX, however, is not so valuable for this comparison as the next one. Its main value is to show how the children are classified, how many are N, F, etc. and especially to show the high death rate — the non-viability especially of the offspring of alcoholic parents. Both the deaths in infancy and the miscarriages are as a rule much higher in the alcoholic than in the non-alcoholic group.

The effect of alcohol in producing non-viable offspring is shown in the final totals which give 8.5 % of deaths in infancy among the non-alcoholic families while it is 17.6 % among the alcoholic. Likewise the number of miscarriages including still births is 3.5 % among the non-alcoholic but 8.2 % among the alcoholic. This agrees with other studies in this connection. For example, Professor Taaz Laitinen, M.D., reporting at the Twelfth International Congress on Alcoholism gives the percentage of miscarriages among total abstainers 1.07 %, moderate drinkers 5.26 %, drinkers 7.11 %. These percentages are based on a study of 3600 for the first group, 6600 for the second group and 9600 for the third group. Our groups probably correspond roughly, the non-alcoholics to his abstainers and moderates, our alcoholic to his drinkers. Since ours are all drunkards we get a little higher percentage.

## TABLE X

PER CENT DISTRIBUTION OF FEEBLE-MINDED AND NORMAL CHILDREN IN ALCOHOLIC AND NON-ALCOHOLIC FAMILIES

*Hereditary Group*

| CONDITION OF PARENTS | | NO. OF MATINGS | TOTAL CHILDREN OF KNOWN MENTALITY | % F | % N |
|---|---|---|---|---|---|
| F — F | Non A | 90 | 300 | 99.0 | 1.0 |
| | A | 36 | 130 | 98.4 | 1.6 |
| N — F | Non A | 45 | 109 | 59.6 | 40.3 |
| | A | 5 | 12 | 75.0 | 25.0 |
| F — N | Non A | 31 | 89 | 37.0 | 62.9 |
| | A | 12 | 44 | 47.7 | 52.2 |
| Un. — F | Non A | 142 | 250 | 79.6 | 20.4 |
| | A | 53 | 124 | 84.6 | 15.3 |
| F — Un. | Non A | 59 | 145 | 82.7 | 17.2 |
| | A | 14 | 35 | 94.2 | 5.7 |
| N — N | Non A | 92 | 289 | 10.0 | 89.9 |
| | A | 4 | 5 | 20.0 | 80.0 |
| Un. — N | Non A | 146 | 307 | 11.0 | 88.9 |
| | A | 19 | 50 | 34.0 | 66.0 |
| N — Un. | Non A | 37 | 236 | 5.5 | 94.5 |
| | A | 4 | 10 | 40.0 | 60.0 |
| Un. — Un. | Non A | 328 | 630 | 46.9 | 53.0 |
| | A | 54 | 106 | 66.0 | 33.9 |
| Totals | Non A | 1020 | 2355 | 46.1 | 53.8 |
| | A | 201 | 516 | 75.1 | 24.8 |

*Neuropathic*

| | | | | | |
|---|---|---|---|---|---|
| N — N | Non A | 21 | 64 | 15.6 | 84.3 |
| | A | 4 | 21 | 14.2 | 85.7 |
| Un. — N | Non A | 44 | 92 | 5.4 | 94.5 |
| | A | 6 | 19 | 31.5 | 68.4 |
| N — Un. | Non A | 26 | 70 | 2.9 | 97.1 |
| | A | 1 | 2 | 0.0 | 100.0 |
| Un. — Un. | Non A | 32 | 75 | 2.7 | 97.3 |
| | A | 2 | 1 | 0.0 | 100.0 |
| Totals | Non A | 123 | 301 | 6.3 | 93.6 |
| | A | 13 | 43 | 20.9 | 79.0 |

TABLE X — *Continued*

PER CENT DISTRIBUTION OF FEEBLE-MINDED AND NORMAL CHILDREN IN ALCOHOLIC AND NON-ALCOHOLIC FAMILIES

*Accident*

| CONDITION OF PARENTS | | NO. OF MATINGS | TOTAL CHILDREN OF KNOWN MENTALITY | % F | % N |
|---|---|---|---|---|---|
| N — N | Non A | 130 | 486 | 7.8 | 92.1 |
| | A | 3 | 15 | 20.0 | 80.0 |
| Un. — N | Non A | 80 | 258 | 2.3 | 97.6 |
| | A | 8 | 23 | 21.7 | 78.2 |
| N — Un. | Non A | 66 | 181 | 0.5 | 99.4 |
| | A | 0 | — | — | — |
| Un. — Un. | Non A | 44 | 89 | 4.4 | 95.5 |
| | A | 3 | 13 | 15.3 | 84.6 |
| F — N | Non A | 1 | 6 | 16.6 | 83.3 |
| | A | 0 | — | — | — |
| Totals | Non A | 321 | 1020 | 4.9 | 95.0 |
| | A | 14 | 51 | 19.6 | 80.3 |

*No Cause*

| | | | | | |
|---|---|---|---|---|---|
| N — N | Non A | 20 | 91 | 8.7 | 91.2 |
| | A | 2 | 6 | 0.0 | 100.0 |
| Un. — N | Non A | 12 | 34 | 0.0 | 100.0 |
| | A | 0 | — | — | — |
| N — Un. | Non A | 11 | 26 | 0 | 100.0 |
| | A | 0 | — | — | — |
| Un. — Un. | Non A | 7 | 24 | 7.0 | 92.9 |
| | A | 1 | 1 | 0.0 | 100.0 |
| Totals | Non A | 50 | 175 | 5.1 | 94.8 |
| | A | 3 | 7 | 0.0 | 100.0 |

TABLE X — *Continued*

PER CENT DISTRIBUTION OF FEEBLE-MINDED AND NORMAL CHILDREN IN ALCOHOLIC AND NON-ALCOHOLIC FAMILIES

*Totals*

| CONDITION OF PARENTS | | NO. OF MATINGS | TOTAL CHILDREN OF KNOWN MENTALITY | % F | % N |
|---|---|---|---|---|---|
| Hereditary | Non A | 1020 | 2355 | 46.1 | 53.8 |
| | A | 201 | 516 | 75.1 | 24.8 |
| Neuropathic | Non A | 123 | 301 | 6.3 | 93.6 |
| | A | 13 | 43 | 20.9 | 79.0 |
| Accident | Non A | 321 | 1020 | 4.9 | 95.0 |
| | A | 14 | 51 | 19.6 | 80.3 |
| No Cause | Non A | 50 | 175 | 5.1 | 94.8 |
| | A | 3 | 7 | 0.0 | 100.0 |
| Grand Totals | Non A | 1514 | 3851 | 30.2 | 69.7 |
| | A | 231 | 617 | 65.9 | 34.0 |

Table X hardly needs discussion. It speaks for itself.

We have here considered only the offspring who lived and whose mentality has been determined.

In practically every case the percentage of feeble-minded is markedly greater in the alcoholic group than in the non-alcoholic — sometimes as much as 35 % more.

It looks evident that alcohol almost doubles the number of feeble-minded children in a family. But are we sure alcohol is a cause and not merely a symptom?

May it not be that alcohol has been a tag by which we have got into our groups more pronounced types of feeble-mindedness, who therefore have a larger proportion of defective children?

It may be thot by some readers that we are resisting the evidence, but the logically minded will see the danger of fallacy. Suppose one were to divide by careful medical examination a large group of people into the tuberculous and the normal (non-

tuberculous) — as we have divided ours into feeble-minded and normal. After the division we decide to examine our data for facts on the race problem as we decided above to use our data to study the alcohol problem. We find twice as many negroes in our tuberculous group as in the normal group. Can we logically conclude that a dark skin causes tuberculosis, or that anything about or in the negro constitution causes it? Of course this is absurd. But we see the absurdity here easier than in the problem of alcohol and feeble-mindedness, because *we know* the cause of tuberculosis and we know the negro is *peculiarly susceptible* to the tubercle bacillus.

Case 236 is somewhat interesting for study in this connection. Our child is feeble-minded supposedly because of the mistreatment of the mother during pregnancy and the fever from which both mother and child suffered at the time the child was born. Neither the father nor mother was alcoholic. The mother, however, later married a man who was alcoholic, a drunken brute. By him she had a daughter and in spite of the drunkenness and the brutality of the father this child is normal. It is such instances as these that must give us pause before we conclude that alcoholism is a cause of feeble-mindedness. There is great danger of being illogical in our thinking in this regard. We forget that a causal relation once established, the effect must always follow when the cause is present and the conditions the same. On the whole then we are forced to decide that, altho in this group the percentages are very high for the feeble-minded children of alcoholic parents, and at first glance it appears that alcohol has greatly increased the number of feeble-minded, yet the argument is not complete.

It must not be forgotten also that we are dealing with only one side of the question, that is, the side of feeble-minded children with their parents. In considering the question of whether alcohol causes feeble-mindedness we ought to consider the cases of normal children with alcoholic parents in otherwise normal

families. While we have at hand no statistics on this subject every one knows that there are many such cases. Indeed one must admit the argument that if alcohol did cause feeble-mindedness, the number of the feeble-minded would be enormously greater than it now is. Even to-day there are cases of severely alcoholic parents with families of children none of whom are feeble-minded; and if we go back two or three generations, when it was much more common for intelligent people to get intoxicated than it is to-day, we see how unlikely it is that alcoholism could be a serious cause of feeble-mindedness, else a large proportion of the population would be defective.

Since the definition of alcoholic as used in our work is practically synonymous with drunkard, the argument is heightened.

If it cannot be shown that drunken parents more certainly have feeble-minded children, it is hardly worth while to discuss the cases of the moderate drinkers or even the habitual drinkers who never drank to intoxication.

Everything seems to indicate that alcoholism itself is only a symptom, that it for the most part occurs in families where there is some form of neurotic taint, especially feeble-mindedness. The percentage of our alcoholics that are also feeble-minded is very great. Indeed one may say without fear of dispute that more people are alcoholic because they are feeble-minded than vice versa.

### PARENTS — PARALYTIC, EPILEPTIC, INSANE, OR SYPHILITIC

In the foregoing discussion of alcohol the cases of alcoholism and non-alcoholism have been uncomplicated by any other serious conditions. In the following Table we present those cases where the parents have one or more of the above conditions which may also be complicated by alcohol.

We have for example, alcohol and paralysis in the same family, sometimes in the same parent; in other cases we have alcohol

and epilepsy; other combinations are presented for comparison as also the cases of paralysis, insanity, epilepsy, etc. alone.

A study of these figures must give one serious doubt as to the causal effect of these conditions in producing feeble-mindedness. If we take the Hereditary Group where we know we are dealing with a defective stock and we might expect that these conditions would greatly increase the proportion of feeble-minded we find strange figures. For example, where the parents are both alcoholic and paralytic there are, out of 22 children, *no* feeble-minded ones. Where there is epilepsy, alcohol and syphilis, there are equal numbers of feeble-minded and normal, a condition of things which we have learned to expect in any family where one parent is normal and the other defective — as in this case.

In the Neuropathic Group we find that parents who were both alcoholic and paralytic have not as large a proportion of feeble-minded children as another group of parents who are only paralytic. Insanity alone gives us 2.2 % feeble-minded; epilepsy alone gives 20 % feeble-minded; but insanity and epilepsy give us *no* feeble-minded.

The Accident Group appears no different. Syphilis gives 20 % feeble-minded; alcohol and syphilis only 12 %.

The number of matings and children is of course small in many of these combinations. They are probably too small to prove anything one way or the other, but it seems altogether unlikely that, if these conditions were potent causes of feeble-mindedness, it should not show in a table like this even tho the numbers are small. The figures are presented only as showing one more failure in an attempt to discover some causal connection between these conditions and feeble-mindedness.

It is of course known that there are in the general population quantities of matings where one or the other of the parents has syphilis or is alcoholic and there are no feeble-minded children. But in a stock already tainted with feeble-mindedness we might

expect to find a greater percentage of feeble-mindedness, thus showing the influence of these conditions. That we do not find it must have at least a little significance.

## TABLE XI

### PARENTS — PARALYTIC, EPILEPTIC, INSANE, OR SYPHILITIC

*Hereditary Group*

| CONDITION OF PARENTS | NO. OF MATINGS | TOTAL CHILDREN | CONDITION OF CHILDREN | | | | |
|---|---|---|---|---|---|---|---|
| | | | % F | % N | % d. inf. | % Mis. | % Un. |
| Par. . . . . | 35 | 209 | 27.2 | 15.7 | 11.0 | 3.3 | 42.5 |
| A. Par. . . . | 4 | 22 | 0.0 | 45.5 | 18.1 | 4.5 | 31.8 |
| I. Par. . . . | 3 | 23 | 34.7 | 0.0 | 4.3 | 0.0 | 60.8 |
| I. . . . . | 26 | 150 | 16.6 | 18.6 | 10.0 | 1.3 | 53.3 |
| A. I. . . . | 9 | 50 | 45.9 | 0.0 | 5.9 | 1.9 | 45.9 |
| E. I. . . . | 2 | 7 | 28.5 | 28.5 | 14.2 | 14.2 | 14.2 |
| E. . . . . | 19 | 111 | 37.8 | 10.8 | 14.4 | 6.3 | 30.7 |
| A. E. . . . | 7 | 35 | 20.0 | 8.5 | 8.5 | 8.5 | 54.2 |
| A. E. Sy. . . | 1 | 5 | 40.0 | 40.0 | 0.0 | 0.0 | 20.0 |
| Sy. . . . . | 10 | 40 | 42.4 | 4.9 | 27.7 | 10.0 | 14.9 |
| A. Sy. . . . | 7 | 42 | 42.8 | 9.5 | 21.4 | 19.0 | 7.2 |
| Totals . . | 123 | 694 | 28.8 | 14.2 | 12.3 | 4.8 | 39.6 |

*Neuropathic Group*

| | | | | | | | |
|---|---|---|---|---|---|---|---|
| Par. . . . | 28 | 163 | 4.9 | 42.9 | 17.2 | 3.6 | 31.2 |
| A. Par. . . . | 3 | 22 | 4.6 | 22.7 | 9.0 | 0.0 | 63.6 |
| I. Par. . . . | 2 | 4 | 0.0 | 0.0 | 0.0 | 50.0 | 50.0 |
| I. . . . . | 7 | 45 | 2.2 | 42.2 | 22.2 | 0.0 | 33.3 |
| A. I. . . . | 4 | 33 | 6.0 | 42.4 | 9.0 | 0.0 | 42.4 |
| E. I. . . . | 1 | 5 | 0.0 | 80.0 | 0.0 | 0.0 | 20.0 |
| E. . . . . | 1 | 5 | 20.0 | 20.0 | 40.0 | 0.0 | 20.0 |
| A. E. . . . | 1 | 3 | 33.3 | 66.6 | 0.0 | 0.0 | 0.0 |
| Sy. . . . . | 3 | 16 | 12.4 | 6.3 | 31.3 | 43.8 | 6.3 |
| Totals . . | 50 | 296 | 5.4 | 39.1 | 16.8 | 5.0 | 33.4 |

TABLE XI—*Continued*

PARENTS — PARALYTIC, EPILEPTIC, INSANE, OR SYPHILITIC

*Accident Group*

| CONDITION OF PARENTS | NO. OF MATINGS | TOTAL CHILDREN | CONDITION OF CHILDREN | | | | |
|---|---|---|---|---|---|---|---|
| | | | % F | % N | % d. inf. | % Mis. | % Un. |
| Par. . . . | 18 | 86 | 4.7 | 63.9 | 8.1 | 3.4 | 19.7 |
| A. Par. . . . | 2 | 15 | 6.6 | 86.6 | 0.0 | 0.0 | 6.6 |
| I. . . . . | 3 | 16 | 0.0 | 62.4 | 12.4 | 0.0 | 24.9 |
| Sy. . . . . | 1 | 5 | 20.0 | 20.0 | 40.0 | 20.0 | 0.0 |
| A. Sy. . . . | 2 | 8 | 12.4 | 74.9 | 0.0 | 0.0 | 12.4 |
| Totals . . | 26 | 130 | 5.3 | 65.3 | 8.4 | 3.0 | 17.6 |

*No Cause*

| | | | | | | | |
|---|---|---|---|---|---|---|---|
| Par. . . . . | 6 | 29 | 3.4 | 58.6 | 3.4 | 0.0 | 34.4 |
| Sy. . . . . | 1 | 2 | 0.0 | 100.0 | 0.0 | 0.0 | 0.0 |
| Totals . . | 7 | 31 | 3.2 | 61.2 | 3.2 | 0.0 | 32.2 |

*Unclassified Group*

| | | | | | | | |
|---|---|---|---|---|---|---|---|
| Par. . . . . | 3 | 18 | 0.0 | 44.4 | 11.2 | 0.0 | 44.4 |
| I. . . . . | 1 | 7 | 0.0 | 28.5 | 42.9 | 0.0 | 28.5 |
| A. I. . . . | 1 | 3 | 33.3 | 0.0 | 0.0 | 0.0 | 66.6 |
| Totals . . | 5 | 28 | 3.5 | 35.8 | 17.8 | 0.0 | 42.8 |
| Grand Totals | 211 | 1179 | 19.0 | 27.9 | 12.9 | 4.4 | 35.5 |

## TUBERCULOSIS

Records have been kept on the assumption that tuberculosis might produce a poison in the parents which would prevent their bringing offspring to full and normal development.

There are on these charts 324 cases of tuberculosis. The cases are scattered thru all of the four groups and an inspection of the various charts will show that their location is only such as would be accounted for by contagion. There-

fore, this presents no argument that tuberculosis has causal relation to feeble-mindedness.

Some of these families show numerous cases of tuberculosis, probably due to the low social order of these people, their uncleanliness and failure to take proper precautions against the disease. Doubtless our reported cases cover not much more than the most clearly defined cases of tuberculosis of the lungs, whereas the usual statistics count all forms. Even so, we can allow for much error in this direction and still have left a low per cent of tuberculosis, for only 2.8 % of all persons charted are marked tuberculous, while in the general population the proportion is from 10% to 15%. This agrees with the view that feeble-minded stock may be primitive and possessed of much animal strength and possibly some immunity to disease.

For the number of cases and percentages see Tables, pages 531, 532.

If there is no influence producing tuberculosis in one group more than another these 324 cases should be found in the different groups in the proportion of the whole number of persons in those groups or 60.3 : 9.7 : 10.6 : 16.7 : 2.4 ; for the Hereditary, Probably Hereditary, Neuropathic, Accident and No Cause respectively.

The following table shows what would be expected compared with what we actually find.

| Group | Expectation | Actual | Too Many | Too Few |
|---|---|---|---|---|
| Hereditary . . . . . | 195 | 187 | | 8 |
| Probably Hereditary . . | 32 | 59 | 27 | |
| Neuropathic . . . . | 35 | 36 | 1 | |
| Accident . . . . . | 54 | 39 | | 15 |
| No Cause . . . . . | 8 | 3 | | 5 |

Here is much tuberculosis in the Probably Hereditary group, but a study of the charts will show that this is largely accidental. Ten of these cases occur on one chart (No. 181).

### SEXUALLY IMMORAL (SX)

Sexual immorality as here used means notorious cases — cases where there is external evidence in the form of illegitimate children, notorious prostitutes, or men equally notorious in their violation of the moral code.

The figures strike one as low and undoubtedly they are much below the facts. However, it is well to remember that with a large proportion of the people among whom this practice prevails the moral code is so unknown or unrecognized that there is very little shame connected with this matter, so that it is less difficult to get the facts than it would be in any similar investigation in better society. This is emphasized by the fact that 170 of these people were feeble-minded while only 15 were normal, the remainder being undetermined.

On the other hand there is a great deal of evidence that feeble-minded people are not nearly so promiscuous in their sexual relations as we might at first expect. There is every evidence that a great many of them live together in wedlock and true to each other. There are also many unmarried among them who live a life of continence and chastity.

While it is a somewhat difficult matter to prove, the writer has come to the conviction after years of study of the problem that the sexual instinct in these people is under-developed rather than over-developed. This is not generally recognized and it is true that it often appears otherwise, but what appears to be an over-development of the instinct, in many cases at least, proves upon examination to be simply an excess due to lack of control. Instinct itself is not stronger but the power of control being removed it manifests itself more strongly than with normal people.

One-third of our charts show sexually immoral individuals but only 2.5% of the total number of *individuals* charted are sexually immoral (Sx) according to our information..

An inspection of the Table shows that the Hereditary Group

gives a percentage for immorality both in charts and in individuals over three times as great as any other group, showing that the lack of control has led a larger proportion of these people into this error.

It can be plainly seen how feeble-mindedness contributes to our sexual problems.

TABLE XII

SHOWING FREQUENCY AND DISTRIBUTION OF SX ON OUR CHARTS

288 Persons on 96 Charts are marked Sx. They are divided as follows:

| MENTALITY | | HEREDITARY 79 CHARTS | PROBABLY H 5 CHARTS | NEU. 8 CHARTS | ACCIDENT 4 CHARTS | TOTAL 96 CHARTS |
|---|---|---|---|---|---|---|
| Normal | Men | 6 | 2 | 0 | 1 | 9 |
| | Women | 3 | 2 | 1 | 0 | 6 |
| Feeble-minded | Men | 40 | 0 | 0 | 0 | 40 |
| | Women | 129 | 1 | 0 | 0 | 130 |
| Undetermined | Men | 31 | 2 | 11 | 1 | 45 |
| | Women | 49 | 1 | 5 | 3 | 58 |
| Totals . . . . . | | 258 | 8 | 17 | 5 | 288 |

Total feeble-minded 170 — Normal 15 — Undetermined 103.
Total Men 94 — Total Women 194.

| | | |
|---|---|---|
| Of 164 Charts in Hereditary Group | 79 Charts or 48.2% | show Sx |
| Of 34 Charts in Probably H. Group | 5 Charts or 14.7% | show Sx |
| Of 37 Charts in Neuropathic Group | 8 Charts or 21.6% | show Sx |
| Of 57 Charts in Accident Group | 4 Charts or 7.0% | show Sx |
| Of 8 Charts in No Cause Group | 0 Chart | shows Sx |
| Of 300 Charts | 96 Charts or 32.0% | show Sx |

| | | |
|---|---|---|
| Of 6868 Persons in Hereditary Group | 258 or 3.75% | are marked Sx |
| Of 1115 Persons in Probably H. Group | 8 or 0.71% | are marked Sx |
| Of 1212 Persons in Neuropathic Group | 17 or 1.40% | are marked Sx |
| Of 1913 Persons in Accident Group | 5 or 0.26% | are marked Sx |
| Of 281 Persons in No Cause Group | 0 | are marked Sx |
| Of 11389 Persons in all Groups | 288 or 2.52% | are marked Sx |

The following table shows what would be expected compared with what we actually find.

| Group | Expectation[1] | Actual | Too Many | Too Few |
|---|---|---|---|---|
| Hereditary . . . . | 174 | 258 | 84 | |
| Probably Hereditary . | 28 | 8 | | 20 |
| Neuropathic . . . | 31 | 17 | | 14 |
| Accident . . . . . | 48 | 5 | | 43 |
| No Cause . . . . | 7 | 0 | | 7 |

Sex immorality is closely associated with hereditary feeble-mindedness.

### ILLEGITIMATE CHILDREN

Closely connected with the subject of sexual immorality is the one of illegitimacy.

Our records show 278 illegitimate children of whom 259 or 93% are in the pure Hereditary Group, 12 are in Probably Hereditary, 3 in Neuropathic and 4 in the Accident Group.

There is nothing new in these facts, they are simply confirmatory of what we have found in other lines.

The following table shows what would be expected compared with what we actually find.

| Group | Expectation[1] | Actual | Too Many | Too Few |
|---|---|---|---|---|
| Hereditary . . . . | 168 | 259 | 91 | |
| Probably Hereditary . | 27 | 12 | | 15 |
| Neuropathic . . . | 29 | 3 | | 26 |
| Accident . . . . . | 47 | 4 | | 43 |
| No Cause . . . . | 7 | 0 | | 7 |

It is plain to be seen that there is a decided relation between illegitimacy and hereditary feeble-mindedness.

[1] See page 480 under Table VIII.

## PARALYSIS

A neuropathic condition of some of the ancestors or relatives which has been designated by our informant and on our charts by the words paralysis, apoplexy, stroke or some similar term is noticeably frequent. The question arises — is this a symptom or a cause of feeble-mindedness?

The following Table gives a summary of what information we have as to the relation of paralysis to feeble-mindedness in these cases.

TABLE XIII

SHOWING FACTS ABOUT PARALYSIS AS IT APPEARS ON OUR CHARTS

Of 300 charts a total of 99 or 33 % show paralysis, divided as follows:

*Hereditary Group*

| Paralysis appears on Charts Numbered | Number of Cases on Each Chart | Line of Descent with our Child | |
|---|---|---|---|
| | | Direct Line and Sibs[1] | Collateral[1] |
| 29 | 8 | 4 | 4 |
| 80 | 4 | 4 | 0 |
| 161 | 3 | 3 | 0 |
| 3, 56, 70, 72, 104, 111, 132, 134, 148 | 2 | 14 | 4 |
| 12, 18, 19, 22, 24, 26, 28, 35, 44, 46, 53, 58, 59, 78, 85, 86, 87, 101, 102, 130, 146, 150, 154, 159, 163 | 1 | 24 | 1 |

Total, 37 charts, 22.5 % of entire Hereditary Group of 164 charts.

*Probably Hereditary Group*

| | | | |
|---|---|---|---|
| 183, 195, 198 | 3 | 9 | 0 |
| 181, 185, 197 | 2 | 6 | 0 |
| 172, 178, 184, 190 | 1 | 4 | 0 |

[1] "Direct line" in these tables includes sibs of parents, grandparents, etc., *i.e.* all persons who have the same blood. "Collaterals" include only those in whose blood is another strain brought in by marriage.

TABLE XIII — *Continued*

SHOWING FACTS ABOUT PARALYSIS AS IT APPEARS ON OUR CHARTS

Total, 10 charts, 29.4 % of the entire group of Probably Hereditary (34 charts).

Total Hereditary (Certain and Probable), 47 charts or 23.7 % of the 198 charts in these two Hereditary Groups.

By individuals, 77 or 0.96 % of all persons in these groups.

*Neuropathic Group*

| Paralysis appears on Charts Numbered | Number of Cases on Each Chart | Line of Descent with our Child | |
|---|---|---|---|
| | | Direct Line and Sibs[1] | Collateral[1] |
| 199 | 5 | 4 | 1 |
| 205, 218, 231 | 3 | 9 | 0 |
| 200, 211, 212, 213, 215, 225, 227 | 2 | 13 | 1 |
| 201, 202, 203, 204, 207, 208, 210, 214, 216, 217, 220, 221, 223, 224, 228, 229, 230, 232 | 1 | 17 | 1 |

Total, 29 charts, 78.3 % of the entire Neuropathic Group of 37 charts.

*Accident Group*

| | | | |
|---|---|---|---|
| 291 | 3 | 3 | 0 |
| 279, 281 | 2 | 4 | 0 |
| 237, 238, 246, 247, 252, 257, 258, 262, 263, 265, 280, 285, 288, 289, 290 | 1 | 15 | 0 |

Total, 18 charts or 31.5 % of the entire Accident Group of 57 charts.

*No Cause Group*

| | | | |
|---|---|---|---|
| 297 | 2 | 2 | 0 |
| 293, 294, 295, 296 | 1 | 4 | 0 |

Total, 5 charts or 62.5 % of the entire No Cause Group of 8 charts.

[1] *Idem.*

*Summary*

| | Hered. | | Prob. H. | | Neur. | | Acc. | | N. C. | Total |
|---|---|---|---|---|---|---|---|---|---|---|
| No. Charts . . | 37 | | 10 | | 29 | | 18 | | 5 | 99 |
| No. Individuals | Dir. | Col. | Dir. | Col. | Dir. | Col. | Dir. | Col. | Dir. | |
| Men | 23 | 5 | 13 | 0 | 26 | 2 | 12 | 0 | 3 | 84 M |
| Women | 26 | 4 | 6 | 0 | 17 | 1 | 10 | 0 | 3 | 67 W |
| Total Persons | 49 | 9 | 19 | 0 | 43 | 3 | 22 | 0 | 6 | 151 |

| | | |
|---|---|---|
| Of 6868 Persons in Hereditary Group | 58 or 0.84% | show Paralysis[1] |
| Of 1115 Persons in Probably H. Group | 19 or 1.74% | show Paralysis |
| (Of 7983 Persons in H. & Prob. H. | 77 or 0.96% | show Paralysis) |
| Of 1212 Persons in Neuropathic Group | 46 or 3.82% | show Paralysis |
| Of 1913 Persons in Accident Group | 22 or 1.15% | show Paralysis |
| Of 281 Persons in No Cause Group | 6 or 0.31% | show Paralysis |
| Of 11,389 Persons in all Groups | 151 or 1.32% | show Paralysis |

The following table shows what would be expected compared with what we actually find.

| Group | Expectation[1] | Actual | Too Many | Too Few |
|---|---|---|---|---|
| Hereditary . . . . . | 91 | 58 | | 33 |
| Probably Hereditary . . | 15 | 19 | 4 | |
| Neuropathic . . . . | 16 | 46 | 30 | |
| Accident . . . . . | 25 | 22 | | 3 |
| No Cause . . . . . | 4 | 6 | 2 | |

The predominance here is in the Neuropathic Group.

We note first that the percentage of neuropathic charts showing paralysis, 78%, is greater than is that of any other group. This is to be expected since there have been placed in this group all cases that, showing no probability of hereditary feeble-minded-

[1] "Paralysis" includes hemiplegia, apoplexy, stroke, etc.

[2] See page 480, under Table VIII.

ness, have among other neuropathic conditions this one of paralysis. The proportion is however quite large in the other groups, being 22% of the hereditary, 29% of the probably hereditary and 31% of the accident. It would seem to be significant that a very large number of these cases are in *direct line*[1] with the case studied, that is to say, it is paralysis of one of the parents, one of the grandparents, or their sibs.

Perhaps the strongest evidence for the causal relation of paralysis is found in the No Cause Group where there are five charts with six paralytic individuals and so far as can be determined nothing else to account for the condition of the feeble-minded person. It is true that the paralysis in these cases is in the grandparents while the parents were normal and reasonably healthy. It does not seem impossible however that the paralysis may be a symptom of a neural condition which is inherent, and which under certain conditions shows itself as feeble-mindedness.

It must be understood that while it is probable that the cases that we have are properly described as paralysis, we are by no means sure that we have all of the cases. An illustration may be taken from the cases of "heart failure" or "heart trouble." There are many of those on our charts but they have not been included in this group, altho undoubtedly what is called "heart failure" is sometimes a paralysis, hemiplegia or stroke of apoplexy.

Unsatisfactory and incomplete as the data are we perhaps shall not get anything more definite until we have a more complete equipment and are able to follow the living cases into the coming generations and have examinations made by medical experts. If for example the people on our charts who are now living could be carefully examined and later their children and grandchildren we would have a mass of data that would be accurate and on which it would be possible to base definite conclusions. Such a plan is entirely feasible.

[1] See note, p. 500.

### INSANITY AND FEEBLE-MINDEDNESS

The distinction between insanity and feeble-mindedness is theoretically an easy one to make. Neurologically, insanity results from a brain that is diseased while in the case of feeble-mindedness the brain has never attained normal development. A dwarf never grows to normal stature but a man of normal stature may be reduced to the height of the dwarf by an accident which cuts six inches from his legs or by disease which shortens him at the hip-joint, or which curves his spine so that he can no longer stand up straight. A feeble-minded person is a person with a dwarf brain, not necessarily in size it is true, but in function; while an insane person is one with a diseased brain. Functionally the two conditions may approach each other so nearly that, to the inexperienced at least, they are difficult to distinguish.

For the layman, the easiest way to distinguish between these is by means of the early history of the individual. A child who has had in the past better intelligence than he now possesses is probably suffering from disease of the brain, since simple arrest of development would not account for the previous superior intelligence. Case 314 is a good illustration of this.

The psychiatrist seldom has any difficulty in distinguishing between the two; he usually finds either an anatomical lesion showing disease of the brain, or well-known mental symptoms characteristic of insanity, which are distinctly different from those of arrested development.

The Binet-Simon Measuring Scale of Intelligence differentiates, fairly accurately, insanity from feeble-mindedness. Epilepsy, it is true, gives apparently much the same result as insanity, and it is sometimes difficult to say by this method whether it is the one or the other, but they are distinguished in either case from distinct feeble-mindedness. A child suffering from simple arrest of development goes to a certain point in the scale then

stops rather abruptly, whereas a person with a diseased brain will answer a part of the questions in a number of different years, missing some questions in all of these years, showing that disease has affected some of these mental processes while not affecting others. This "scattering," as it is called, has been proved to be characteristic of epilepsy and of insanity.

Here at Vineland were collected some few years ago all of the cases that showed "scattering" by the Binet test. Out of the twenty that were thus recorded four had gone to an insane asylum within a year, even tho at the time the test was made there was no suspicion of insanity about them. These were of course cases of feeble-mindedness *plus* insanity. The brain that has been arrested in its development thus causing feeble-mindedness may later become diseased, and so we have insanity in a feeble-minded person. These cases of insane feeble-minded are sometimes difficult to recognize, but usually they show sooner or later such positive signs of insanity that all doubt is removed. The need for autopsies and histological examinations in all such cases is evident. The peculiarities of insanity in the feeble-minded is a chapter in the story of feeble-mindedness which is not yet written.

The real theme of the present section is not the question of the insane feeble-minded, but the question of the relation of insanity in the family to feeble-mindedness in the same family, not in the same individual.

Previous to the present investigation we at Vineland shared the common idea that insanity and feeble-mindedness were largely interchangeable in the same families; that is to say, there was a neuropathic taint which sometimes manifested itself as insanity and in other individuals as feeble-mindedness. We were accordingly prepared to find our charts heavily sprinkled with insane individuals. Great has been our surprise therefore to find the number of insane persons so much smaller than was anticipated.

Inspection of the charts themselves does not convince one that

insanity in the ancestry has any very potent influence toward causing feeble-mindedness. It undoubtedly may be a symptom of nervous derangement which will occasionally give rise to feeble-mindedness.

TABLE XIV

SHOWING INSANITY AS IT APPEARS ON OUR CHARTS

Of 300 charts 62 or 20.6 % show Insanity, divided as follows:

*Hereditary Group*

| INSANE PERSONS APPEAR ON CHARTS NUMBERED | NUMBER OF CASES ON EACH CHART | DIRECT LINE AND SIBS | COLLATERAL |
|---|---|---|---|
| 29 | 7 | 5 | 2 |
| 4 | 6 | 5 | 1 |
| 97 | 4 | 4 | 0 |
| 56 | 3 | 0 | 3 |
| 11, 32, 61, 101, 154 | 2 | 9 | 1 |
| 12, 16, 19, 21, 34, 35, 43, 50, 52, 58, 71, 72, 82, 91, 110, 119, 126, 132, 145, 151, 156, 159, 160, 161 | 1 | 20 | 4 |

Total charts 33 or 20.1 % of the Hereditary Group of 164 charts.

Total individuals 54 or 0.78 % of all persons on charts of Hereditary Group.

*Probably Hereditary Group*

| | | | |
|---|---|---|---|
| 183 | 6 | 4 | 2 |
| 170 | 3 | 2 | 1 |
| 165, 177, 184 | 2 | 3 | 3 |
| 179, 180, 186, 192, 196 | 1 | 4 | 1 |

Total charts 10 or 29.4 % of the entire Group of Probably H. (34 charts).

Total individuals 20 or 1.79 % of all persons on charts of Probably Hereditary Group.

Total Hereditary (Certain and Probable) 43 charts or 21.7 % of the 198 charts of these two groups.

By individuals 74 or 0.92 % of all persons in these groups.

TABLE XIV — *Continued*

SHOWING INSANITY AS IT APPEARS ON OUR CHARTS

*Neuropathic Group*

| INSANE PERSONS APPEAR ON CHARTS NUMBERED | NUMBER OF CASES ON EACH CHART | DIRECT LINE AND SIBS | COLLATERAL |
|---|---|---|---|
| 200 | 7 | 6 | 1 |
| 225, 228 | 4 | 7 | 1 |
| 233 | 3 | 0 | 3 |
| 220, 222, 235 | 2 | 6 | 0 |
| 205, 207, 209, 210, 227, 229, 231, 234 | 1 | 8 | 0 |

Total Charts 15 or 40.5 % of the entire Group of 37 Neuropathic Charts.

Total individuals 32 or 2.64 % of all persons on charts of Neuropathic Group.

*Accident Group*

| | | | |
|---|---|---|---|
| 240, 253, 259, 288 | 1 | 4 | 0 |

Total Charts 4 or 7 % of the entire Accident Group of 57 charts.

Total individuals 4 or 0.20 % of all persons on charts of Accident Group.

*Summary*

| | HEREDITARY | | PROBABLY H. | | NEUROPATHIC | | ACCIDENT | |
|---|---|---|---|---|---|---|---|---|
| No. of Charts | 33 | | 10 | | 15 | | 4 | |
| No. Individuals | Dir. | Col. | Dir. | Col. | Dir. | Col. | Dir. | Col. |
| Men | 23 | 4 | 3 | 3 | 13 | 3 | 2 | 0 |
| Women | 20 | 7 | 10 | 4 | 14 | 2 | 2 | 0 |
| Total Persons | 43 | 11 | 13 | 7 | 27 | 5 | 4 | 0 |

Total Men 51. Total Women 59. Total Insane 110.

In direct line with our cases 87, in collateral line 23.

| | | | |
|---|---|---|---|
| Of | 6868 Persons in Hereditary Group | 54 or 0.78% | are Insane |
| Of | 1115 Persons in Probably H. Group | 20 or 1.79% | are Insane |
| Of | 1212 Persons in Neuropathic Group | 32 or 2.64% | are Insane |
| Of | 1913 Persons in Accident Group | 4 or 0.20% | are Insane |
| Of | 281 Persons in No Cause Group | 0 | are Insane |
| Of | 11,389 Persons in all Groups | 110 or 0.96% | are Insane |

The following table shows what would be expected compared with what we actually find.

| Group | Expectation[1] | Actual | Too Many | Too Few |
|---|---|---|---|---|
| Hereditary . . | 66 | 54 | | 12 |
| Probably H. . . | 11 | 20 | 9 | |
| Neuropathic . . | 12 | 32 | 20 | |
| Accident . . . | 18 | 4 | | 14 |
| No Cause . . . | 3 | 0 | | 3 |

The Insanity is clearly in the Neuropathic group, *not* among the Hereditary Feeble-minded.

Not only is there no close relationship between insanity and feeble-mindedness, but the conviction has grown since the beginning of our study of the problem, that these two types of abnormal mentality belong at opposite ends of the physical scale. It is an old and cherished thot that feeble-mindedness is a kind of reversion to a more primitive type of the human race. The idea of reversion in this sense is no longer held, since the Mendelian law has come in to give us a clearer and more satisfactory explanation. Once the hereditary character of feeble-mindedness is recognized one can hardly keep from thinking of a feeble-minded person as belonging to a strain that has not yet developed to the higher levels of intelligence. In other words, we come back again to the view of a more primitive form of humanity, a vigorous animal organism of low intellect but strong physique — the wild man of to-day. The striking thing is that this view is remarkably borne out in many phases of the physical nature of this group. One cannot study the moron without discovering that he is not only largely free from the marks of degeneration, frequently possessing a comely face, but he also has many of the physical characteristics of a more primitive stock.

[1] See page 480, under Table VIII.

A dentist assures me that the finest set of teeth he has ever seen is in the mouth of one of our morons.

It is true that our study of the Height and Weight of the Feeble-minded (see Journal of Nervous and Mental Diseases, April, 1912, Vol. 39, pages 217–236) shows the average moron to be no taller nor heavier than the average normal, and moreover they seem to have stopped growing two or three years earlier than the normal person. It must be remembered however that these figures are the average of all morons and include those that are defective by disease, accident and neuropathic ancestry, and it is quite possible that if we had the statistics on the pure hereditary morons we might find that they even exceed the stature of the average normal person. They at least equal it. They also have strength. This does not show in statistical studies where the dynamometer is used because such measurements involve will power and intelligence.

The dynamometer itself is a measure of intelligence among these defectives. They are unable to exert their strength in obedience to the command, "squeeze this as hard as possible." But wherever an exercise of strength is called forth by a natural situation and their action is impulsive or instinctive one discovers at once how great is the strength. The writer was one of six persons required to hold one of these boys in the chair while the dentist looked at his teeth. That same boy could not squeeze a kilogram on the dynamometer in spite of all efforts to induce him to do it.

An examination of the inmates of any Institution will show among the cases of hereditary feeble-mindedness a large number of tall, broad-shouldered, heavy, thick-set individuals with great strength. There is an incoördination of their movements and a certain coarseness of features which do not make them attractive, but which in many ways suggest the savage. The fact that many of these defectives become vicious and dangerous when mistreated possibly points in the same direction.

Sometimes these hereditary cases when of a low type swallow anything that comes within their reach that is small enough to be swallowed, — sticks, stones, leather and the like. But rarely do these things disturb their health, which again would seem to indicate a primitive digestive system. Wounds seem to heal many times where in normal people they would give much trouble. There is apparently more or less resistance to certain diseases. There is a dullness to pain. These with other facts have given the impression that we are dealing with a primitive, crude, coarse form of the human organism; not a "reversion" but a primitive strain that has remained much as in the savage condition.

On the other hand it is maintained by psychiatrists that many if not all forms of insanity come upon individuals who have what we may term a more elaborately developed organism, a nervous system that is highly developed, that is high strung, and that requires only a slight shock to throw it over into an abnormal condition.

If this view of the two conditions is correct, it would throw much light upon many things in connection with them. It is true that an unusually high percentage of feeble-minded persons become insane, but whether these persons are predominantly in the Hereditary Group and of the moron grade, it is difficult to say; possibly it would be found that they do not interfere with the argument. At least the above view seems worth consideration.

### GENIUS AND FEEBLE-MINDEDNESS

Much confusion exists in the popular mind in regard to the relation of feeble-mindedness to genius. It is quite commonly supposed that it is but a step from the one to the other, and that the presence of an idiot in the family may mean that there is a genius at the other end. So strong is this belief that some object to all methods of limiting the propagation of the feeble-minded, fearing to deprive the world of geniuses. It is probable that

this view is based upon the misunderstanding of the difference between feeble-mindedness and insanity. There is no question that it often is a simple step from insanity to genius; indeed, there are many cases of genius that would pass with any psychiatrist as true insanities. Apparently the decision as to whether a man is called insane or a genius depends upon whether his special form of aberration proves to be useful or dangerous.

I believe that in cases of hereditary feeble-mindedness we are dealing with a mentality upon which it is absolutely impossible to graft any kind of genius; that there is no connection between feeble-mindedness and genius. It is significant that in our 300 family histories totaling 11,389 individuals not a single genius has been found. These figures certainly can be taken at their face value because it is evident that had there been a genius in any of these families all of the other members would have called our attention to it.

In the case of the neuropathic ancestry and accidental cases the situation might be different from the hereditary. In the neuropathic especially it might seem that we were dealing with the kind of nervous system which might give rise to those peculiar eccentricities which sometimes spell genius. It is perhaps significant that even in this group we have discovered no geniuses. It may indicate what some students are inclined to claim, that there is no case of feeble-mindedness unless there is an hereditary taint, the only exception to this being the cases of actual traumatism.

Not only are there no geniuses, but the fact cannot be too strongly emphasized that even the people who are considered normal (and so charted) in the families of the Hereditary Group are not as a rule people of *average* intelligence, but in almost all cases are of a low grade of intelligence and often low type socially. So far as the eugenic problem is concerned therefore, there is no argument against eugenical measures for fear of cutting off possible geniuses by preventing procreation in families where hereditary feeble-mindedness exists.

## FEEBLE-MINDEDNESS AND EPILEPSY

The relation of feeble-mindedness to epilepsy is one which has never been cleared up.

Epilepsy is a generic term under which are grouped a number of different kinds of epilepsy. It is possible that some of these are intimately connected with feeble-mindedness either as cause or effect, and it is also possible that others of the epilepsies have no connection whatever with feeble-mindedness. While the great majority of the epileptics in our Institutions are feeble-minded, this is because they do not come to the Institutions until there is such a degree of mental deficiency that they are unable to take care of themselves. On the other hand there is a considerable percentage of epileptics who have only occasional seizures, and at other times are perfectly normal and able to carry on business or manage their own affairs.

There is the psychic epilepsy or psychical epileptic equivalents. We have made no attempt to collect data in this unsettled field. The relations here we leave to the students of epilepsy. We confine ourselves to those cases where the motor manifestations are sufficiently marked to render a diagnosis reasonably sure.

There is considerable association between epilepsy of the easily recognizable kind and feeble-mindedness. As to any causal relation between the two conditions, it seems evident that it is possible to make two groups. There are those cases that are primarily epileptic and in which the epilepsy acts to cause a deterioration of mentality so that we have eventually an individual whom it is hard to distinguish from the true feeble-minded person. And then there are others who are primarily feeble-minded — perhaps belonging to the Hereditary Group, perhaps to the Non-hereditary — who acquire epilepsy. In these cases the epileptic attacks often have little or no apparent effect upon the mentality of the person. They remain, for many years at least, at the same intellectual level that they have manifested since the arrest showed itself.

It is possible to divide epileptics into these two groups with considerable accuracy by means of the Binet Scale. The person who is feeble-minded primarily and epileptic secondarily responds to the Binet questions as does the purely feeble-minded person. That is to say, he answers them up to a certain point and then stops more or less abruptly, showing that at a certain level his mental development has stopped. He can do everything up to that level, nothing beyond. The other group shows the scattering which was spoken of under the head of insanity (page 505). This indicates that such a person has been at one time of higher intelligence than at the time of examination. The epilepsy has interfered with the mental functioning along certain lines more than along others, with the result that some questions in the higher levels are answered while some of those in the lower levels are missed. Sometimes it happens, for example, that an epileptic will answer all the questions in age nine or ten while failing on some or all in age six or seven.

That there is any relation between epilepsy and feeble-mindedness in a hereditary way, that is to say that an epileptic person is more apt to have feeble-minded children or vice versa, our data give little evidence beyond the fact that epilepsy seems often to indicate a neuropathic condition, and that in such families feeble-mindedness may appear.

We have found seventy-nine cases of epilepsy. It must be borne in mind that we have been making no study of epilepsy. Our field workers were in no wise qualified to determine epilepsy in any of its more psychic phases, and our records are of such individuals as have been diagnosed by the local physician or have so many and such characteristic features that it is apparent to the layman that they suffer from this malady.

The somewhat larger percentage of the cases in the neuropathic group is perhaps insignificant, since the presence of epilepsy in some members of the family has been one of the criteria determining this group. The small number in the accident group as compared with the hereditary is distinctly significant.

These cases of epilepsy will be found on the following charts:

Hereditary Charts — Nos. 8, 9, 11, 12, 13, 15, 17, 20, 21, 29, 30, 37, 39, 45, 47, 52, 56, 70, 71, 75, 80, 81, 82, 85, 107, 109, 114, 118, 141, 144, 151, 152, 158, 161

Probably Hereditary Charts — Nos. 172, 177, 186, 189, 190

Neuropathic Charts — Nos. 200, 203, 206, 208, 215, 220, 221, 225, 233

Accident Charts — Nos. 237, 252, 260, 289

No Cause Chart — No. 298

TABLE XV

| | | |
|---|---|---|
| Of 6868 Persons in Hereditary Group | 56 or 0.81% | are Epileptic |
| Of 1115 Persons in Probably H. Group | 5 or 0.44% | are Epileptic |
| Of 1212 Persons in Neuropathic Group | 13 or 1.07% | are Epileptic |
| Of 1913 Persons in Accident Group | 4 or 0.20% | are Epileptic |
| Of 281 Persons in No Cause Group | 1 or 0.03% | are Epileptic |
| Of 11,389 Persons in all Groups | 79 or 0.69% | are Epileptic |

The following table shows what would be expected compared with what we actually find.

| GROUP | EXPECTATION[1] | ACTUAL | TOO MANY | TOO FEW |
|---|---|---|---|---|
| Hereditary . . . . | 48 | 56 | 8 | |
| Probably H. . . . | 8 | 5 | | 3 |
| Neuropathic . . . | 8 | 13 | 5 | |
| Accident . . . . | 13 | 4 | | 9 |
| No Cause . . . . | 2 | 1 | | 1 |

Epilepsy is seen to predominate slightly in the Hereditary and Neuropathic Groups.

## CRIMINALITY AND FEEBLE-MINDEDNESS

Every feeble-minded person is a potential criminal. This is necessarily true since the feeble-minded lacks one or the other of the factors essential to a moral life — an understanding of right and wrong, and the power of control. If he does not know right and wrong, does not really appreciate this question, then of course he is as likely to do the wrong thing as the right. Even

[1] See page 480, under Table VIII.

if he is of sufficient intelligence and has had the necessary training so that he does know, since he lacks the power of control he is unable to resist his natural impulses.

Whether the feeble-minded person actually becomes a criminal depends upon two factors, his temperament and his environment. If he is of a quiet, phlegmatic temperament with thoroly weakened impulses he may never be impelled to do anything seriously wrong. In this case when he cannot earn a living he will starve to death unless philanthropic people provide for him. On the other hand, if he is a nervous, excitable, impulsive person he is almost sure to turn in the direction of criminality. Fortunately for the welfare of society the feeble-minded person as a rule lacks energy. But whatever his temperament, in a bad environment he may still become a criminal, the phlegmatic temperament becoming simply the dupe of more intelligent criminals, while the excitable, nervous, impulsive feeble-minded person may escape criminality if his necessities are provided for, and his impulses and energies are turned in a wholesome direction.

It is not easy to decide beforehand which of these conditions is fulfilled in any particular group. In the data that we are studying, criminality seems at first sight to be surprisingly small. This is partly explained by the fact that our cases include only those who have been under arrest. Thirty-two charts with a total of forty-five individuals show criminality. That is, criminality appears on 10 % of the charts, but only one-third of 1 % of the individuals are criminalistic. It is perhaps significant that the greater proportion of these are in the Hereditary Group. Thirty of the charts in the Hereditary Groups, or 15.1 %, have criminals on them; in the Neuropathic Group two charts or 5.4 %; in the Accidents none. The criminal individuals are 0.52 % of the persons in the Hereditary Groups; 0.24% of those in the Neuropathic Group and none of the accidents. Of the 45 criminals 41 are men, 4 are women, while 24 are known to be feeble-minded, 1 is normal and 20 unknown.

It is probable that in these cases two factors account for the small proportion of criminals. These people are very largely from rural districts, and their temptations perhaps have not been so great. But more significant is the fact that in such communities minor kinds of crime are not taken account of, so that they do not get marked "criminal" because they were never arrested. In the city cases our data are always much less complete. There are individuals of whom we have learned enough to determine their mentality while not being able to follow their careers. They have left home or have been lost sight of and may be to-day in prison without their friends and relatives knowing anything about it. Undoubtedly there are cases that escape in this way, but on the whole it seems probable that the fact of a criminal life would be one that we would be likely to discover if it existed. Such facts are hard to conceal.

There are nine criminalistic individuals on the charts that do not belong to the family, that is to say, they have married in, and they are only significant as showing the kind of company these people keep.

TABLE XVI

SHOWING CRIMINALITY AS IT APPEARS ON OUR CHARTS

Of 300 charts a total of 32 or 10.6% show criminality, divided as follows:

*Hereditary Group*

| CRIMINALISTIC PERSONS APPEAR ON CHARTS NUMBERED | NUMBER OF CASES ON EACH CHART | DIRECT LINE AND SIBS[1] | COLLATERAL[1] |
|---|---|---|---|
| 29 | 5 | 2 | 3 |
| 7, 64, 15 | 3 | 4 | 5 |
| 2, 3, 4, 5, 16, 21, 31, 37, 48, 57, 62, 65, 72, 79, 84, 90, 111, 116, 119, 124, 131, 156, 159 | 1 | 18 | 5 |

[1] See note, p. 500.

TABLE XVI — *Continued*

SHOWING CRIMINALITY AS IT APPEARS ON OUR CHARTS

Total charts 27 or 16.4 % of Hereditary Group of 164 charts.

Total individuals 37 or 0.53 % of all persons on charts of Hereditary Group.

*Probably Hereditary Group*

| CRIMINALISTIC PERSONS APPEAR ON CHARTS NUMBERED | NUMBER OF CASES ON EACH CHART | DIRECT LINE AND SIBS[1] | COLLATERAL[1] |
|---|---|---|---|
| 176 | 3 | 0 | 3 |
| 171, 186 | 1 | 0 | 2 |

Total charts 3 or 8.8 % of the entire group of Probably Hereditary — 34 charts.

Total individuals 5 or 0.44 % of all persons on charts of Probably Hereditary Group.

Total Hereditary (certain and probable) 30 charts or 15.1 % of the 198 charts of these two groups.

By individuals 42 or 0.52 % of all persons in these groups.

*Neuropathic Group*

| | | | |
|---|---|---|---|
| 206 | 1 | 1 | 0 |
| 217 | 2 | 2 | 0 |

Total charts 2 or 5.4 % of the entire group of 37 Neuropathic charts.

Total individuals 3 or 0.25 % of all persons on charts of Neuropathic Group.

*Accident Group — No Cases*

*Summary*

| | HEREDITARY | | PROBABLY H. | | NEUROPATHIC | | ACCIDENT | |
|---|---|---|---|---|---|---|---|---|
| No. charts . . . | 27 | | 3 | | 2 | | 0 | |
| No. Individuals | Dir. | Col. | Dir. | Col. | Dir. | Col. | Dir. | Col. |
| Men . . . . | 22 | 12 | 0 | 4 | 3 | 0 | 0 | 0 |
| Women . . . | 2 | 1 | 0 | 1 | 0 | 0 | 0 | 0 |
| Total persons . . | 24 | 13 | 0 | 5 | 3 | 0 | 0 | 0 |

[1] See note, p. 500.

Total Men, 41. Total Women, 4. Total Criminal, 45.
In direct line with our cases, 27 — in collateral lines, 18.
Nine criminals (not included in above) have married into these families — 7 men, 2 women. Eight of these are in the Hereditary Group, one in the Neuropathic.

| | | | |
|---|---|---|---|
| Of | 6868 Persons in Hereditary Group | 37 or 0.53% | are Criminalistic |
| Of | 1115 Persons in Probably H. Group | 5 or 0.44% | are Criminalistic |
| Of | 1212 Persons in Neuropathic Group | 3 or 0.24% | are Criminalistic |
| Of | 1913 Persons in Accident Group | 0 | are Criminalistic |
| Of | 281 Persons in No Cause Group | 0 | are Criminalistic |
| Of | 11,389 Persons in all Groups | 45 or 0.39% | are Criminalistic |

The following table shows what would be expected compared with what we actually find.

| Group | Expectation[1] | Actual | Too Many | Too Few |
|---|---|---|---|---|
| Hereditary | 27 | 37 | 10 | |
| Probably H. | 4 | 5 | 1 | |
| Neuropathic | 5 | 3 | | 2 |
| Accident | 8 | 0 | | 8 |
| No Cause | 1 | 0 | | 1 |

The strong preponderance in the Hereditary Group is significant.

## SYPHILIS

None of the diseases supposed to be potent causes of feeble-mindedness is so difficult of investigation, so enigmatical, as syphilis. Not only in the popular mind but in the professional thot it is given a prominent place, yet of all the causes there is perhaps none for which there is less evidence. This does not necessarily mean that it is not a cause, but simply that it is not proved.

The terrible nature of the disease; the serious results that it is known to produce, such as miscarriage, deaths in infancy, general paralysis of the insane; the fact that it is one of the two diseases that can be transmitted from the mother to the child, because the germs can pass thru the chorion cells; the fact of its close

association with sexual immorality; all tend to render it in the minds of most people a horror of which anything can be believed. Under these conditions it is but natural to expect that it might be a cause of feeble-mindedness. The fact that its presence is so generally concealed tempts us to argue that if we knew more about it we should find it standing in causal relation; and this secrecy makes it impossible to arrive at the truth.

We have had no better success in getting at the true history than have other investigators. We have recorded only 46 cases found on 27 charts. That the number should be much greater than this there is no doubt.

It is well understood by the medical profession that a mating, which shows first a number of miscarriages followed by deaths in infancy, and finally living offspring, is a picture that means syphilis in one or both of the parents almost without question. A survey of the charts with this in mind will show at once that in a large number of cases syphilis might be suspected even where not so marked.

A glance at the Table of distribution of the syphilitic cases will show that there is little evidence that syphilis is a cause of feeble-mindedness. The cases are very largely in the Hereditary Group.

TABLE XVII

SHOWING THE DISTRIBUTION OF SYPHILIS (SY) ON OUR CHARTS

Sy appears on 27 charts or 9.0 % of all the charts, divided as follows:

| | Hereditary | | Probably H. | | Neur. | | Acc. | | No Cause | |
|---|---|---|---|---|---|---|---|---|---|---|
| No. of Charts . . | 17 | | 3 | | 4 | | 2 | | 1 | |
| | Dir. | Col. | Dir. | Col. | Dir. | Col. | Dir. | Col. | Dir. | Col. |
| Men . . . . . | 7 | 8 | 2 | 1 | 3 | 1 | 2 | 0 | 0 | 0 |
| Women . . . . | 6 | 14 | 0 | 0 | 0 | 0 | 1 | 0 | 1 | 0 |
| Totals . . . . | 13 | 22 | 2 | 1 | 3 | 1 | 3 | 0 | 1 | 0 |

Total 46. Total Men 24. Total Women 22.

| | | |
|---|---|---|
| Of 164 Charts in Hereditary Group | 17 or 10.36% | show Syphilis (Sy) |
| Of 34 Charts in Probably H. Group | 3 or 8.82% | show Syphilis |
| Of 37 Charts in Neuropathic Group | 4 or 10.81% | show Syphilis |
| Of 57 Charts in Accident Group | 2 or 3.50% | show Syphilis |
| Of 8 Charts in No Cause Group | 1 or 12.5% | shows Syphilis |
| Of 300 Charts | 27 or 8.6 % | show Syphilis |
| Of 6868 Persons in Hereditary Group | 35 or 0.50% | are Syphilitic (Sy) |
| Of 1115 Persons in Probably H. Group | 3 or 0.26% | are Syphilitic |
| Of 1212 Persons in Neuropathic Group | 4 or 0.33% | are Syphilitic |
| Of 1913 Persons in Accident Group | 3 or 0.15% | are Syphilitic |
| Of 281 Persons in No Cause Group | 1 or 0.35% | are Syphilitic |
| Of 11,389 Persons on all Charts | 46 or 0.40% | are Syphilitic |

The following table shows what would be expected, if there were a uniform distribution, compared with what we actually find.

| Group | Expectation[1] | Actual | Too Many | Too Few |
|---|---|---|---|---|
| Hereditary . . . . | 28 | 35 | 7 | |
| Probably H. . . . | 4 | 3 | | 1 |
| Neuropathic . . . | 5 | 4 | | 1 |
| Accident . . . . | 8 | 3 | | 5 |
| No Cause . . . . | 1 | 1 | 0 | 0 |

The Wassermann test is now being applied to our children and under the most perfectly controlled conditions.

Twenty-nine of the children involved in this study have been tested; 20 of these gave a positive reaction. Some of these cases were selected because of suspected syphilis; in 5 we had a previous history of syphilis in the family. In one case both paternal grandparents were affected; in the second it was both parents and a brother; in the third it was a relative of the mother; in the fourth it was the father; and in the fifth the father's brother. This leaves 15 cases where we get a positive Wassermann but with no history of syphilis. Of these 29 children only one has evidently had an infection.

[1] See page 480, under Table VIII.

There are 9 cases with history of syphilis which gave negative Wassermann reaction. In all but two the syphilis was in the father; in one of these two it was in both father and mother; in the other case it was in the paternal aunt.

The 20 positive Wassermanns are distributed as follows: 9 are in the Hereditary Group, 3 in the Neuropathic, 3 in the Meningitis, 2 are Mongolians, 2 Accidents, and 1 Unclassified. It is thus seen that these cases are all attributed to other causes than syphilis. To the extent that these others are acceptable causes there is no need of calling in syphilis to account for the mental defect nor is there any argument therefor.

While these figures are few and any argument based on them is incomplete, yet one cannot help having the feeling that if syphilis is a cause of feeble-mindedness, it certainly is not a very potent one. One is also led to question it from consideration of such cases as the following:

In Case 284, Fred K. shows a positive Wassermann. His father and five sibs were normal and are children of a syphilitic father and a syphilitic mother. This is a striking instance of those cases where syphilis does not produce feeble-mindedness, and it suggests a line of evidence which every physician can duplicate; that is, parents one or both syphilitic, children normal.

In conclusion, our charts bear abundant evidence of the well-known fact that syphilis produces miscarriage and early death, and the data indicate that if it ever produces feeble-mindedness it does so only under most favorable conditions. What those conditions are cannot be shown until we have much more careful studies.

## BLINDNESS AND DEAFNESS

Blindness and deafness appear in 34 and 45 individuals respectively. Our records do not always show whether or not the cases are congenital. We have endeavored to omit the cases where

the condition was due to accident but it has not always been possible to determine even that. The fact that the blindness is nearly all in the hereditary cases is significant.

The deafness on the other hand appears relatively larger in the neuropathic than in any other group.

*Blindness*

| | | | |
|---|---|---|---|
| Of | 6868 Persons in Hereditary Group | 28 or 0.40% | are Blind |
| Of | 1115 Persons in Probably H. Group | 1 or 0.08% | are Blind |
| Of | 1212 Persons in Neuropathic Group | 3 or 0.24% | are Blind |
| Of | 1913 Persons in Accident Group | 2 or 0.10% | are Blind |
| Of | 281 Persons in No Cause Group | 0 | are Blind |
| Of | 11,389 Persons in all Groups | 34 or 0.29% | are Blind |

The following table shows what would be expected compared with what we actually find.

| Group | Expectation[1] | Actual | Too Many | Too Few |
|---|---|---|---|---|
| Hereditary . . . . | 20 | 28 | 8 | |
| Probably H. . . . | 3 | 1 | | 2 |
| Neuropathic . . . | 4 | 3 | | 1 |
| Accident . . . . | 6 | 2 | | 4 |
| No Cause . . . . | 1 | 0 | | 1 |

*Deafness*

| | | | |
|---|---|---|---|
| Of | 6868 Persons in Hereditary Group | 23 or 0.33% | are Deaf |
| Of | 1115 Persons in Probably H. Group | 5 or 0.44% | are Deaf |
| Of | 1212 Persons in Neuropathic Group | 11 or 0.90% | are Deaf |
| Of | 1913 Persons in Accident Group | 6 or 0.31% | are Deaf |
| Of | 281 Persons in No Cause Group | 0 | are Deaf |
| Of | 11,389 Persons in all Groups | 45 or 0.39% | are Deaf |

The following table shows what would be expected compared with what we actually find.

[1] See page 480, under Table VIII.

| Group | Expectation[1] | Actual | Too Many | Too Few |
|---|---|---|---|---|
| Hereditary . . . . | 27 | 23 | | 4 |
| Probably H. . . . | 4 | 5 | 1 | |
| Neuropathic . . . | 5 | 11 | 6 | |
| Accident . . . . | 8 | 6 | | 2 |
| No Cause . . . . | 1 | 0 | | 1 |

## CONSANGUINITY

There is a common belief that feeble-mindedness is caused by consanguinity of the parents, — that if cousins marry some of the children will be feeble-minded. There are 30 cases of cousin-marriages among our 2058 matings. Of these 20 are in the Hereditary Group. There is no argument from these since the children are feeble-minded by heredity. Inspection of the charts does not show that there are more defectives where the parents are related than where they are not related. These cases are on Charts 22, 29, 30, 40, 46, 59, 70, 74, 80, 120, 123, 124, 134, 142, 143, 154, 159 and 164.

Case 187 is in the Probably Hereditary Group. It is interesting because the father is probably feeble-minded and his wife being his second cousin may have carried the same defect, yet from this mating there are three normal children and no defectives.

Case 252 has been discussed in the chapter on the Mongolian defective. In this case the normal parents have two defective children out of three. These parents were more than cousins, as will be seen from a study of the chart. Since there was defect in the family it may very well have been so doubled up that it reappeared in these children. Of all the cases on our charts this is the strongest in favor of the influence of consanguinity, and yet it is not conclusive.

[1] See page 480, under Table VIII.

In Case 237 the maternal grandparents of our child were third cousins; this is so distant that it is not worth discussing.

Case 276: the parents of our child were cousins; Gertie's defectiveness is explained by an injury, so it is not necessary to call in the theory of consanguinity.

In Case 292 the parents were second cousins. The child Nathan was a meningitic case which satisfactorily explains his condition.

Case 223 is at first sight a strong one; the parents were normal but cousins; two children are defective. The father was hemiplegic. Unfortunately we are without proof because the grandparents are undetermined. They may have been feeble-minded, in which case these defective children would be accounted for.

These cases confirm the view now generally held by physicians and students of the problem that there is nothing in consanguinity *per se;* but given a tainted family the mating of two members of the same family increases the liability of the defect appearing. It may be very well maintained that since very few families are free from defect of one form or another, physical or mental, the ban against cousin-marriage is on the whole wise. The evil of this form of statement however is twofold. First, there are cases, whether they be many or few, where there is no taint in the family and consequently no objection whatever to the marriage of cousins. Second, the form of statement would imply that there is no objection to any mating where they are not relatives. This is the greater error of the two, for it is just as dangerous for a person of tainted family to mate with a person of another tainted family as it would be to mate with his own cousin. In both cases we are increasing the liability that the taint will reappear. It might be added that many persons are wont to argue this matter from an analogy of animal breeding. The fallacy of attempting to use such analogy is evident when we consider that the effect of consanguinity, or inbreeding as it is called, is very different with different kinds of animals. With

some species inbreeding is the rule, and produces no deleterious results. If we are going to reason by analogy it is just as logical to draw our analogy from this species of animal as from one where inbreeding does lead to bad results.

## TWINS

Fifty-one of our charts record the birth of twins. There seems to be nothing especially worthy of discussion in connection with this matter save in Cases 84, 134, 144, 185. (See also 157.)

In these four cases we have the interesting condition of one of the twins being normal, the other feeble-minded. The special interest in these cases comes from the bearing they have upon a popular idea as to the relation between the similarity of twins and their mode of genesis. There is a theory that twins who closely resemble each other, sometimes called "identical twins," come from a single fertilized ovum which in the course of development divides and develops into the two individuals, whereas, twins that do not closely resemble each other are the result of two fertilized ova.

Attractive as this explanation is at first sight, Thorndike has shown in his Monograph on "The Measurement of Twins," that while the development of twins from a single fertilized ovum is not impossible, yet it is not at all a necessary explanation, nor is it a very probable one. His study would seem to show that twins are the result of two fertilized ova, with the possibility of some exceptions.

It is unfortunate that our data are incomplete in regard to the majority of our cases, nevertheless the four where the data are complete are all in agreement and constitute another strong argument for true heredity. On any theory of environment, pre-natal or post-natal, it would be difficult to account for cases of twins with one normal and the other defective. On the heredity theory however the case is simple. So far as heredity is concerned, the fact that these individuals were of different

mentality is no more difficult to explain if they were born at the same time than if they were born separately. We have two ova, fertilized by the different spermatozoa, each of them subject to whatever possibilities the conditions of the chromosomes warrant. In the one case a "defective" spermatozoön has fertilized a "defective" ovum with the resulting defective offspring. In the other case, a normal spermatozoön has fertilized a normal ovum, or else one of the germ cells has been normal and the other "defective," in either case resulting in a normal offspring.

The fact that from the time of fertilization the two embryos have the same environment until the birth of the children constitutes what must be considered an almost ideal test of the theory of heredity and environment. If we add to this, the argument that twins usually have the same environment thru childhood, we still further emphasize the point.

### NEUROTIC, MIGRAINE, ETC.

The remaining conditions have not proved of great significance in this study. They are therefore passed by with brief mention. The distribution of the cases will be found in Tables XIX–XXI, pages 531, 532.

NEUROTIC. Seventy-one individuals have been marked neurotic. Little importance is attached to the figures in this case as the term is too general and the conditions included under it are too varied to have scientific value as a group.

MIGRAINE. Migraine or periodic sick headache is a disease that indicates a disturbed nervous system and may have some relation to mental defect.

We have found however only 13 cases. Here again it must be said that our diagnoses have not always been those of physicians and consequently we are not likely to have discovered nearly all of the cases. The greatest number of them (7 of the 13) occur

in the Neuropathic Group as we would expect. There are 4 in the Hereditary Group and 2 in the Probably Hereditary.

GOITRE. We have found among our families 8 cases of goitre; 6 of these are in the Hereditary Group, 1 in the Neuropathic and 1 in the Unclassified Group. Altho the number is small it is perhaps not without some significance that 6 out of the 8 cases belong in the Hereditary Group.

WANDERER. The classification "Wanderer" is also one thot to be significant but we have found only 7 cases, 4 of which are in the Hereditary Group.

The small number of cases under these last four headings would give us the impression that they in reality have little to do with feeble-mindedness. And when we note further the large percentage that fall in the group of hereditary feeble-mindedness, it is only logical to conclude that the individuals were feeble-minded by heredity and that these other conditions had little or nothing to do with it. Whatever may be ultimately determined as to the actual part that any of these conditions plays in causing feeble-mindedness, it is at least clear that we should in no case rely upon any one of these supposed causes, without looking further and deeper into the family and individual history to discover if there be a more fundamental cause. One gets the impression from these cases that all the foregoing conditions are merely symptoms of an underlying defect.

## IN OTHER INSTITUTIONS

On 76 of the charts there are 149 persons recorded who are inmates of other Institutions than the Training School. Besides institutions for the feeble-minded this includes jails, almshouses, insane hospitals and reformatories. Many of those in the jails and almshouses are there either because their condition has not been recognized, or because there has been no other place for them. Of these 149 individuals, 67 have been found feeble-minded. This number with our own cases makes 377, or 19.6 %

of all the feeble-minded individuals on our charts, who are or have been in Institutions, and maintained very largely at public expense.

## TABLE XVIII

### PERSONS IN INSTITUTIONS OTHER THAN THE TRAINING SCHOOL MOSTLY AT PUBLIC EXPENSE

Seventy-six Charts, 25.3 % of all charts, show individuals in other Institutions than the Training School. There are 149 persons divided as follows:

| | HEREDITARY | | PROBABLY H. | | NEUROPATHIC | | ACCIDENT | |
|---|---|---|---|---|---|---|---|---|
| No. of Charts | 59 | | 7 | | 8 | | 2 | |
| | Dir. | Col. | Dir. | Col. | Dir. | Col. | Dir. | Col. |
| Men | 40 | 21 | 4 | 3 | 5 | 3 | 1 | 0 |
| Women | 32 | 26 | 4 | 1 | 7 | 1 | 1 | 0 |
| Totals | 72 | 47 | 8 | 4 | 12 | 4 | 2 | 0 |

Of 6868 Persons in Hereditary Group 119 or 1.73% were in other Insts.
Of 1115 Persons in Probably H. Group 12 or 1.07% were in other Insts.
Of 1212 Persons in Neuropathic Group 16 or 1.32% were in other Insts.
Of 1913 Persons in Accident Group 2 or 0.10% were in other Insts.
Of 281 Persons in No Cause Group 0 were in other Insts.

Of 11,389 Persons in all Groups 149 or 1.31 % were in other Insts.

| MENTALITY | | HEREDITARY | PROBABLY H. | NEUROPATHIC | ACCIDENT |
|---|---|---|---|---|---|
| Feeble-minded | Men | 29 | 3 | 0 | 0 |
| | Women | 33 | 2 | 0 | 0 |
| Undetermined | Men | 32 | 4 | 8 | 1 |
| | Women | 25 | 3 | 8 | 1 |
| | Totals | 119 | 12 | 16 | 2 |

Feeble-minded 67; undetermined 82.

Of 1918 *Feeble-minded* Persons on the 300 charts 377 or 19.6% were in Institutions, including Vineland.

In the three following tables will be found a summary of the preceding figures arranged for easy comparison.

Table XIX relates to CHARTS. It shows the number of charts and the distribution of the total number in each of our five fundamental groups. It shows also the number of charts in each group that have persons marked Alcoholic, Tuberculous, etc., and the percentage these are of all the charts in the fundamental groups, *e.g.* 164 or 54.6 % of the total number of charts are in the Hereditary Group, 98 or 59.8 % of the Hereditary charts have Alcohol on them, 42.6 % have Tuberculosis, 48.2 % have Sx, etc.

## TABLE XIX

SHOWING NUMBER OF CHARTS HAVING ALCOHOL, TUBERCULOSIS, ETC. AND THEIR DISTRIBUTION IN THE FUNDAMENTAL GROUPS

| FUNDAMENTAL GROUPS | TOTAL CHARTS | % | ALCOHOLIC | | TUBERCULOUS | | SX | | PARALYTIC | | INSANE | |
|---|---|---|---|---|---|---|---|---|---|---|---|---|
| | | | No. | % | No. | % | No. | % | No. | % | No. | % |
| Total | 300 | 100 | 152 | 50.6 | 143 | 47.8 | 96 | 32.0 | 99 | 33.0 | 62 | 20.6 |
| Hered. | 164 | 54.6 | 98 | 59.8 | 70 | 42.6 | 79 | 48.2 | 37 | 22.6 | 33 | 20.1 |
| P. H. | 34 | 11.3 | 15 | 44.4 | 20 | 58.8 | 5 | 14.8 | 10 | 29.4 | 10 | 29.4 |
| Neu. | 37 | 12.3 | 18 | 48.6 | 17 | 45.9 | 8 | 21.6 | 29 | 78.3 | 15 | 40.5 |
| Acc. | 57 | 19.0 | 20 | 35.0 | 22 | 38.5 | 4 | 7.0 | 18 | 31.5 | 4 | 7.0 |
| N. C. | 8 | 2.6 | 1 | 12.5 | 2 | 25.0 | 0 | 0.0 | 5 | 62.5 | 0 | 0.0 |

| | | | EPILEPTIC | | NEUROTICS | | SY | | CRIMINALISTIC | | DEAF | |
|---|---|---|---|---|---|---|---|---|---|---|---|---|
| Total | 300 | 100 | 53 | 17.6 | 44 | 14.6 | 27 | 9.0 | 32 | 10.6 | 38 | 12.6 |
| Hered. | 164 | 54.6 | 33 | 20.1 | 15 | 9.1 | 17 | 10.4 | 27 | 16.5 | 17 | 10.4 |
| P. H. | 34 | 11.3 | 5 | 14.8 | 9 | 26.4 | 3 | 8.9 | 3 | 8.9 | 5 | 14.8 |
| Neu. | 37 | 12.3 | 9 | 24.3 | 12 | 32.4 | 4 | 10.9 | 2 | 5.4 | 10 | 27.0 |
| Acc. | 57 | 19.0 | 5 | 8.8 | 8 | 14.0 | 2 | 3.5 | 0 | 0.0 | 6 | 10.5 |
| N. C. | 8 | 2.6 | 1 | 12.5 | 0 | 0.0 | 1 | 12.5 | 0 | 0.0 | 0 | 0.0 |

TABLE XIX — *Continued*

SHOWING NO. OF CHARTS HAVING ALCOHOL, TUBERCULOSIS, ETC. AND THEIR DISTRIBUTION IN THE FUNDAMENTAL GROUPS

| FUNDAMENTAL GROUPS | TOTAL CHARTS | % | BLIND | | MIGRAINE | | GOITRE | | WANDERERS | | IN OTHER INSTITUTIONS | |
|---|---|---|---|---|---|---|---|---|---|---|---|---|
| Total | 300 | 100 | 19 | 6.3 | 10 | 3.3 | 6 | 2.0 | 6 | 2.0 | 76 | 25.3 |
| Hered. | 164 | 54.6 | 13 | 7.9 | 4 | 2.4 | 2 | 1.2 | 3 | 1.8 | 59 | 35.9 |
| P. H. | 34 | 11.3 | 1 | 2.9 | 1 | 2.9 | 3 | 8.8 | 0 | 0.0 | 7 | 20.6 |
| Neu. | 37 | 12.3 | 3 | 8.1 | 4 | 10.8 | 1 | 2.7 | 1 | 2.7 | 8 | 21.6 |
| Acc. | 57 | 19.0 | 2 | 3.5 | 0 | 0.0 | 0 | 0.0 | 2 | 3.5 | 2 | 3.5 |
| N. C. | 8 | 2.6 | 0 | 0.0 | 0 | 0.0 | 0 | 0.0 | 0 | 0.0 | 0 | 0.0 |

Table XX relates to PERSONS. It shows the distribution of all persons charted in the five fundamental groups, and the distribution of those who are Alcoholic, Tuberculous, etc.; *e.g.* 60.3 % of all persons charted are on charts in the Hereditary Group; 74.5 % of all the alcoholics are in this group, which is 14.2 % more alcoholics than there should be on the basis of a uniform distribution. In like manner it can be seen that the Hereditary Group has 2.6 % too few Tuberculous, 29.2 % too many Sx's, etc.

## TABLE XX

SHOWING DISTRIBUTION OF PERSONS MARKED ALCOHOLIC, TUBERCULOUS, ETC. IN THE FUNDAMENTAL GROUPS COMPARED WITH THE DISTRIBUTION OF ALL THE PERSONS INTO THESE GROUPS

| Fundamental Groups | Distribution | Alcoholic | | Tuberculous | | Sx | | Paralytic | | Insane | | Epileptic | | Neurotic | | Sy | |
|---|---|---|---|---|---|---|---|---|---|---|---|---|---|---|---|---|---|
| | | Distribution | Deviation | Distribution | Deviation | Distribution | Deviation | Distribution | Deviation | Distribution | Deviation | Distribution | Deviation | Distribution | Deviation | Distribution | Deviation |
| Hered. | 60.3 | 74.5 | +14.2 | 57.7 | −2.6 | 89.5 | +29.2 | 38.4 | −21.9 | 49.1 | −11.2 | 70.8 | +10.5 | 30.9 | −29.4 | 76.1 | +15.8 |
| P. H. | 9.7 | 7.9 | − 1.8 | 18.2 | +8.5 | 2.7 | − 7.0 | 12.5 | + 2.8 | 18.2 | + 8.5 | 6.3 | − 3.4 | 32.4 | +22.7 | 6.5 | − 3.2 |
| Neu. | 10.6 | 9.0 | − 1.6 | 11.1 | +0.5 | 5.9 | − 4.7 | 30.4 | +19.8 | 29.0 | +18.4 | 16.4 | + 5.8 | 21.1 | +10.5 | 8.6 | − 2.0 |
| Acc. | 16.7 | 7.9 | − 8.8 | 12.0 | −4.7 | 1.7 | −15.0 | 14.5 | − 2.2 | 3.6 | −13.1 | 5.0 | −11.7 | 15.4 | − 1.3 | 6.5 | −10.2 |
| N. C. | 2.4 | 0.5 | − 1.9 | 0.9 | −1.5 | 0.0 | − 2.4 | 3.9 | + 1.5 | 0.0 | − 2.4 | 1.2 | − 1.2 | 0.0 | − 2.4 | 2.1 | − 0.3 |
| | | Criminalistic | | Deaf | | Blind | | Migraine | | Goitre | | Wanderers | | In Other Institutions | | Illeg. Children | |
| Hered. | 60.3 | 82.2 | +21.9 | 51.1 | − 9.2 | 82.3 | +22.0 | 30.7 | −29.6 | 42.8 | −17.5 | 57.1 | − 3.2 | 79.8 | +19.5 | 93.1 | +32.8 |
| P. H. | 9.7 | 11.1 | + 1.4 | 11.1 | + 1.4 | 2.9 | − 6.8 | 15.3 | + 5.6 | 42.8 | +33.1 | 0.0 | − 9.7 | 8.0 | − 1.7 | 4.3 | − 5.4 |
| Neu. | 10.6 | 6.6 | − 4.0 | 24.4 | +13.8 | 8.8 | − 1.8 | 53.8 | +43.2 | 14.2 | + 3.6 | 14.2 | + 3.6 | 10.7 | + 0.1 | 1.0 | − 9.6 |
| Acc. | 16.7 | 0.0 | −16.7 | 13.3 | − 3.4 | 5.8 | −10.9 | 0.0 | −16.7 | 0.0 | −16.7 | 28.5 | +11.8 | 1.3 | −15.4 | 1.4 | −15.3 |
| N. C. | 2.4 | 0.0 | − 2.4 | 0.0 | − 2.4 | 0.0 | − 2.4 | 0.0 | − 2.4 | 0.0 | − 2.4 | 0.0 | − 2.4 | 0.0 | − 2.4 | 0.0 | − 2.4 |

## TABLE XXI

SUMMARY OF TABLES SHOWING DISTRIBUTION OF THE DIFFERENT CONDITIONS AMONG OUR FUNDAMENTAL GROUPS. THESE ARE THE NUMBERS ON WHICH THE PERCENTAGES OF TABLE XX ARE BASED

| GROUP | ALCOHOLIC — 365 | | | TUBERCULOUS — 324 | | | SX — 288 | | | PARALYTIC — 151 | | | INSANE — 110 | | | EPILEPTIC — 79 | | | NEUROTIC — 71 | | |
|---|---|---|---|---|---|---|---|---|---|---|---|---|---|---|---|---|---|---|---|---|---|
| | Expect. | Actual | Dif. | Expect. | Actual | Dif. | Expect. | Actual | Dif. | Expect. | Actual | Dif. | Expect. | Actual | Dif. | Expect. | Actual | Dif. | Expect. | Actual | Dif. |
| Hered. . | 220 | 272 | +52 | 195 | 187 | − 8 | 174 | 258 | +84 | 91 | 58 | −33 | 66 | 54 | −12 | 48 | 56 | +8 | 43 | 22 | −21 |
| P. H. . | 36 | 29 | − 7 | 32 | 59 | +27 | 28 | 8 | −20 | 15 | 19 | + 4 | 11 | 20 | + 9 | 8 | 5 | −3 | 7 | 23 | +16 |
| Neu. . | 39 | 33 | − 6 | 35 | 36 | + 1 | 31 | 17 | −14 | 16 | 46 | +30 | 12 | 32 | +20 | 8 | 13 | +5 | 7 | 15 | + 8 |
| Acc. . | 61 | 29 | −32 | 54 | 39 | −15 | 48 | 5 | −43 | 25 | 22 | − 3 | 18 | 4 | −14 | 13 | 4 | −9 | 12 | 11 | − 1 |
| N. C. . | 9 | 2 | − 7 | 8 | 3 | − 5 | 7 | 0 | − 7 | 4 | 6 | + 2 | 3 | 0 | − 3 | 2 | 1 | −1 | 2 | 0 | − 2 |

| | SY — 46 | | | CRIMINALISTIC — 45 | | | DEAF — 45 | | | BLIND — 34 | | | MIGRAINE — 13 | | | IN OTHER INSTITUTIONS — 157 | | | ILLEG. CHILDREN — 278 | | |
|---|---|---|---|---|---|---|---|---|---|---|---|---|---|---|---|---|---|---|---|---|---|
| Hered. . | 28 | 35 | +7 | 27 | 37 | +10 | 27 | 23 | − 4 | 20 | 28 | +8 | 8 | 4 | −4 | 90 | 119 | +29 | 168 | 259 | +91 |
| P. H. . | 4 | 3 | −1 | 4 | 5 | + 1 | 4 | 5 | + 1 | 3 | 1 | −2 | 1 | 2 | +1 | 14 | 12 | − 2 | 27 | 12 | −15 |
| Neu. . | 5 | 4 | −1 | 5 | 3 | − 2 | 5 | 11 | + 6 | 4 | 3 | −1 | 2 | 7 | +5 | 16 | 16 | 0 | 29 | 3 | −26 |
| Acc. . | 8 | 3 | −5 | 8 | 0 | − 8 | 8 | 6 | − 2 | 6 | 2 | −4 | 1 | 0 | −1 | 25 | 2 | −23 | 47 | 4 | −43 |
| N. C. . | 1 | 1 | 0 | 1 | 0 | − 1 | 1 | 0 | − 1 | 1 | 0 | −1 | 1 | 0 | −1 | 4 | 0 | − 4 | 7 | 0 | − 7 |

# CHAPTER VI

## MENDEL'S LAW OF INHERITANCE

The classical experiments of the Austrian monk, Gregor Mendel, are becoming familiar to all who follow, with even a passing interest, the development of modern science.

Mendel was struck by the remarkable colors that were obtained by cross fertilization in plants. He found upon looking into the matter that no one had carried on experiments to such an extent and in such a way "as to make it possible to determine the number of different forms under which the offspring of hybrids appear, or to arrange these forms with certainty according to their separate generations, or definitely to ascertain their statistical relations." After eight years experimenting he was able to present his results and formulate a law, — a law which has done more to energize scientific study of inheritance and to arouse popular interest in this branch of science than anything that has ever been devised.

It is a veritable Arabian Nights story how this wizard of Brünn planted in his garden two kinds of peas, one of which was tall and the other dwarf; how he cut out the stamens and transferred the pollen from one variety to the pistils of the other; and how when his plants matured he gathered the fruit, planted it again, only to find that all of these plants were *tall*, none were dwarf; how he allowed these to grow by themselves and be fertilized naturally, raising the fruit and planting it the second year, with the result that thruout his whole garden there were three talls to every dwarf. Three to one, — what magic! First generation all tall; second generation tall and dwarf in the

ratio of three to one; always three to one. Precisely the same thing happened if he used, instead of tall and dwarf peas, a variety which had a green pod and another a yellow pod; or whether he chose his two kinds because the one had rounded peas and the other wrinkled.

This was not all; he found that if he planted the peas from his dwarf plants he got all dwarfs, and he might plant them year after year, they were always dwarf, never tall. With the tall peas this was not true. The tall peas all looked alike, but when planted, one-third of them always produced tall peas, no matter how many years they were replanted. But the other two-thirds always yielded tall and dwarf in the ratio of three to one. The same three to one!

Mendel called the peculiarity in which his two plants differed the "unit character"; for example, the tallness or the color of the seed. He called the character which appeared in the first generation as the result of his cross fertilization the *dominant*, the one that did not appear until the second generation he called *recessive* — on the ground that it was there in the first generation but did not appear. It had receded, as it were, into the background; only to reappear in the next generation.

This work of Mendel's was published in 1866 and was then lost for thirty-four years and re-discovered in 1900.

What is the explanation of this strange mixture of mathematics and biology, this three to one ratio in the growing of peas? In Mendel's day there was no explanation. Biology had not caught up with this problem. Mendel died before biological science had reached the point of development where it could explain his marvelous discovery.

THE EXPLANATION. While some details are still obscure we can follow the general plan. Consider the spermatozoön and ovum in animals. It was found that if these "germ cells" previous to being placed under the microscope were put in some kind of stain, certain bodies appeared in the cells because

they had absorbed some of the stain or coloring matter. Nothing was known of the function or the purpose of these bodies, but because they became colored under this treatment they were called color bodies, or in the Greek, *chromosomes*.

It was found that there was practically always the same number of these bodies in the germ cells of the same species of plant or animal. They were thus not accidentally colored bodies but bodies of some significance. Furthermore it was discovered that there is a process of maturing or ripening in these cells before they are ready to unite with the cell of the opposite sex for the formation of a new individual. In this ripening the number of these chromosomes is reduced one-half. This process is too complicated to be described here, but the student should refer to biology and master this point as it is essential to an understanding of the mechanism of inheritance. (See Bibliography, E. B. Wilson; also Davenport, *Heredity in Relation to Eugenics*, p. 15.)

It is thus seen that in the new individual formed by the union of these two mature cells there will be the regular number of chromosomes, half of which have come from each parent. It was soon concluded that these chromosomes were to be considered the bearers of heredity. It is now doubtful whether they are the sole bearers, but for the present purpose of making clear our problem we shall consider only the chromosomes.

We are now getting at the mechanism of the transmission of traits from parents to children. The offspring may inherit the same trait from both father and mother or he may inherit from one alone. In the latter case only half of his chromosomes carry the trait, while in the former all of them carry it.

For reasons which we cannot explain here the biologist conceives that each chromosome has within it what are called determiners, that is, certain particles, molecules or elements which contain within themselves the potential organ which they represent, or some quality or characteristic of the organ such as

the color of the eye or of the hair. If the individual has brown eyes it is because his chromosomes carried determiners for brown eyes. If he has long arms it is because his chromosomes, some of them at least, carried determiners for long arm bones.

If we stop here we should conclude that we inherit half from our fathers and half from our mothers; but there is a further step. It would be equally true that our father inherited his twenty-four chromosomes twelve from his father and twelve from his mother. But we must not forget that each germ cell in maturing divides into two, each part carrying twelve germ cells. The question now is — how does it divide? Do twelve father cells and twelve mother cells go into each of the respective parts, or is it eleven father one mother, or ten father and two mother, or any of the other possible combinations? So far as we now know this division is purely accidental, and as likely to be one combination as another. We thus see that while A inherited twelve chromosomes from his father, these in turn came from the grandparents and because of the division, A may have ten chromosomes from his paternal grandfather and two from his paternal grandmother, or any other combination.

So far as those traits are concerned, which an individual has inherited from both parents, it of course makes no difference how the division takes place. Every mature germ cell will carry that trait, but if a trait has been inherited from *only one parent*, of course it is a vital matter whether a germ cell containing that trait or one that does not contain it unites with the germ cell of the opposite sex. Suppose, for example, that Mendel plants nothing but tall peas, then no matter how the chromosomes divide every chromosome will contain the determiner for tallness. On the other hand, what Mendel actually did was to place the pollen of a tall pea on the pistil of the dwarf pea (or vice versa). These two cells then unite and a new germ cell is formed. This germ cell carries only *one* determiner for tallness — not *two*. When those germ cells divide, half of the resulting mature cells will

carry the determiner for tallness and half will lack it. Now suppose a pistillate plant of this character, only half of whose ovules carry chromosomes with determiners for tallness, is fertilized by pollen grains from a plant only half of whose chromosomes carry the determiners for tallness. There are four possibilities. A pollen grain with a determiner for tallness may unite with an ovule having a determiner for tallness; the resulting plant will have two determiners for tallness or will be what we call duplex. Second, a pollen grain with a determiner for tallness may unite with an ovule without the determiner for tallness; the resulting plant will have only one determiner for tallness. It will be tall but simplex. Third, a pollen grain without the determiner for tallness may unite with an ovule with a determiner for tallness; there will therefore, be only one determiner in the resulting plant but the plant will be tall and simplex. Fourth, a pollen grain without the determiner for tallness may unite with an ovule without the determiner for tallness; the resulting plant will have no determiner for tallness and will therefore be a dwarf. Thus we have the explanation of what Mendel found.

His dwarf peas that always produced dwarfs, that is, "bred true," had no determiners for tallness. The others always had at least one determiner for tallness and therefore were all tall, but one-third of these had two determiners and therefore, when combined with others of the same kind, must always produce tall peas with two determiners; while two-thirds of the tall peas had only one determiner for tallness so when they combined they repeated the story that we have just told — of three to one.

Any individual plant or animal that has inherited a trait from both parents is said to be *duplex* in respect to that trait, whereas if it has inherited it from only one side it is *simplex;* and if the trait is entirely absent it is *nulliplex.*

We are now ready for the application of Mendel's law to our problem. The law has already been proved to apply to many human traits; for example, color of hair, color of eyes, color-

blindness, night-blindness, hæmophilia, brachydactylism. It also seems probable that it applies to the inheritance of certain insanities and some of the epilepsies, as has been worked out by Rosanoff for the insanities, and Davenport and Weeks for epilepsy.

Does it apply to feeble-mindedness?

## CHAPTER VII

### IS FEEBLE-MINDEDNESS A UNIT CHARACTER?

In attempting to apply the Mendelian formula to the inheritance of feeble-mindedness our first question would be: is feeble-mindedness a unit character, and if so, is it dominant or is it recessive, due to the presence of a determiner that arrests development or to the absence of a determiner that makes for normality?

That feeble-mindedness is hereditary is abundantly demonstrated from the case histories presented. Feeble-mindedness is most naturally considered as a lack of intelligence; from this standpoint we would expect that intelligence is dominant, but it is hard for psychologists to think of intelligence as a unit. Intelligence results from numerous but undetermined factors. One may be intelligent along some lines and unintelligent along others, and it matters not how much we divide the mind up, so to speak, we may say from one standpoint that we never reach the unit. The will, which is popularly spoken of as tho it were an entity in itself, is for the psychologist simply the sum of various processes, with the result that a person may have strong will-power along some lines and very weak along others. The same is true of the judgment, which is so markedly deficient in the feeble-minded.

At this point, one asks again — is judgment or will-power inherited? No more than tuberculosis or blacksmithing or soldiering. What is inherited is a constitution that is particularly liable to be attacked by tubercular bacilli, a good skeleton and musculature which make a man capable of swinging a large

hammer and working in iron, or lastly a physique that meets the requirements of a soldier; in other words the *capacity* for any one of these. In the same way we must look not for judgment and will-power, but for the capacity for the development of judgment and will-power. These lie, in the last analysis, in the brain and the brain cells.

To take the simplest possible illustration; in order to have will-power one must have good sense organs for receiving impressions, for example sight and hearing, with good communication between their corresponding brain areas. The physical basis for this communication is supposed to be along what is called association fibers.

Let us for the sake of clearness attempt to work out a possible hypothesis, making such assumptions as are not forbidden by any known facts. In accordance with present day views of hereditary transmission of characters, we naturally assume that there is a vast number of determiners in the human chromosome. There must, for example, be a determiner for the size of every particular organ, tissue and structure, to what fineness or particularity no one can of course guess; but everything that is handed down from father to son must be handed down by means of a determiner in the chromosome. How minute those characters are can be appreciated by recalling what is already known. Pigmentation has been thoroly studied so that the color of the hair and of the eyes is known not only to be transmitted definitely but strictly in accordance with the Mendelian law. Undoubtedly the size of the hair or its fineness, possibly its length are also determined. Carrying this thot over into the brain, we have every right to believe that there is a determiner for perhaps thousands of different groups of brain cells; further, for the size of the cell body, the size of the neurite and dendrite, also for the chemical composition of the cell body, of the neurite and dendrite and for the medullary sheath.

Let us now consider some well-known facts. Here is a person

who can see a piano perfectly well. He recognizes it, knows what it is, can repeat the word piano, appreciates the music of the piano, knows what is meant when he hears the word piano, all of which facts show that both his eyes and his ears, and his motor speech centers, are intact and normal. But if you take him into a room and he sees the piano, while he recognizes it and knows what it is, he is unable to say the word piano.

In such cases we say the man is suffering from a disease which we call aphasia which we explain by saying that there is a break in the association fibers that connect the sight center with the motor speech center or with the auditory center. This actually happens in life, and as we have said, is a disease.

For the sake of our illustration assume that this is hereditary, and that this individual *lacks* the association fibers between sight and motor speech centers, not because they have been diseased and broken up but because they never developed, because the determiner for the proper development of those cells was lacking from this man's chromosomes.

Now suppose a child with this inheritance comes before us; what kind of peculiar mentality will he exhibit? It will of course be the inability to associate things seen, with sounds, with names, or with the ability to pronounce the names. If it is the latter, the condition is quickly discovered and we call it aphasia. But suppose it is the former, that is to say, the association between the visual image and the auditory image. I desire to send this boy on an errand, I say to him — "You know what a piano is?" "Yes." The child hears and understands what I say because his auditory center is intact. My words sound to him sensible and reasonable. But he had no visual image of a piano, consequently when I say "Show me the piano in this room," he does not understand, not because he does not see the piano, but because he does not associate what he sees with the spoken word, piano. I therefore say the boy is stupid. After repeated experiences of this kind I conclude that he is feeble-minded, and

such a child undoubtedly would be feeble-minded but of a peculiar type.

In similar manner, let us suppose there is a girl whose association fibers between the auditory center and the motor centers are not developed, so that the child hears what is said, understands perfectly well, but has no power of innervating the motor muscles and acting upon what is said. This is the child that does not act, or does not do what she is told. We cannot induce her to obey a command. Such a child is feeble-minded but again of a peculiar type. Now let us assume that in both of these cases these conditions are recessive, due to the absence of the determiner for normal association fibers in these two fields. We know from our study of the Mendelian law that if a person having either one of the above mentioned defects marries a normal person, in the first generation all the children will be normal but simplex, half their chromosomes will lack the determiner for normality along this line. If one of the second generation marries a person of like inheritance, the offspring will be in the ratio of 3 normal (1 duplex, 2 simplex) to 1 defective.

Now suppose a person having both these defects — *i.e.* he lacks the visual auditory and the auditory motor fibers — marries; if he marries a normal person, in the first generation of course all will be normal, but now let us take the second generation mating. A person who has inherited normal association fibers in each of these lines from only one parent marries a person of like inheritance, what will be the result? Let us represent the presence of the association fibers in the first instance by X and the absence by Y; in the second assumed case the presence will be indicated by A and the absence by B. Now we want to know the result if a person, only half of whose chromosomes carry determiners for sight-hearing association marries a person of the same condition, and at the same time each of these individuals has only half his chromosomes carrying determiners for the hearing-action association fibers. That is to say, each person is simplex

in each of these unit characters. Taking each one separately we have a person who is represented by XY marrying a person whose condition is also shown by XY; the result of this is, of course, our familiar formula: $XX + 2XY + YY$; in a similar manner for the second condition the individuals are AB and AB with a result that we have $AA + 2AB + BB$. Now all of the possibilities are enumerated when we combine each of the first terms with each one of the second. The following are the terms that we get:

$$AAXX + 2AAXY + AAYY + 2ABXX + 4ABXY + 2ABYY + BBXX + 2BBXY + BBYY$$

Now let us see what we have. Remembering that wherever there are two A's or two X's we have that character duplex. Two Y's or two B's mean a complete absence of the character. While an A or an X means that the character is present but with only one determiner instead of two. In other words, taking our results as they stand, AAXX means a thoroly normal individual. Next there will be two people AAXY, that is, with the A character present and duplex and the X character simplex. Next, an AAYY gives us the A character present, and the X character absent entirely. Next we have two individuals with the XX that is duplex, and AB simplex, in that character. Then we have four individuals that are simplex for each character. Then two that are simplex for the A character and nulliplex for the X character. Next comes one that is nulliplex for the A and duplex for the X; then two that are simplex for X and nulliplex A, and lastly, a BBYY which means an individual entirely lacking in both qualities.

We thus have nine different kinds of individuals resulting. One of those kinds is represented by four individuals, four others by two each, and each of the others by one person. If now we collect all those that to the outward appearance will be the same, we have the following:

First, there are nine individuals all possessing both A and X. therefore manifesting the presence of both characters. Only one is duplex in both; in the others either A or X is simplex.

Next, we have three individuals in whom the X character is entirely lacking but the A character present. In one it is present as a duplex, in the other two as a simplex — the AAYY and the 2 ABYY.

In the next group are three individuals in whom the A character is lacking entirely, but the X character is either duplex or simplex; these are the BBXX and 2 BBXY.

Lastly, one individual represented by BBYY is lacking in both A and X. In tabular form this gives:

| Normal | Defective in the X Trait | Defective in the A Trait | Defective in Both Traits |
|---|---|---|---|
| 1 AAXX duplex | 2 ABYY (1) | 2 BBXY (1) | 1 BBYY |
| 2 AAXY simplex X | 1 AAYY (2) | 1 BBXX (2) | nulliplex both |
| 2 ABXX simplex A | (1) simplex A nulliplex X | (1) nulliplex A simplex X | |
| 4 ABXY simplex both | (2) duplex A nulliplex X | (2) nulliplex A duplex X | |
| 9 | 3 | 3 | 1 |

Here we see we have three different kinds of feeble-minded people so far as their outward appearance is concerned. All those in any one group are alike having or lacking the same characters.

To sum up: if two people marry under the conditions that we have assumed and 16 children are born, there would be *9 normal children;* there would be *3* that *lacked the X character*, *3* that *lacked the A character*, and *1* that *lacked both.* In other words there would be one group of normals and three groups of feeble-minded, showing three different grades or kinds of feeble-mindedness. When it came to the eugenics question and the marrying of these people there is only one out of the sixteen that is absolutely normal, the others are all defective in their

germ plasms and are capable of transmitting defect if they mate with persons like themselves.

But the point that we are emphasizing here is that if two people marry, each of whom has only half the chromosomes carrying the determiners for two mental traits, the result would be that out of 16 children 9 would be normal, altho 8 of them capable of transmitting the defect, and the other 7 would show three different kinds of feeble-mindedness.

If there are *three* characters instead of *two* in which the mating parties are each simplex, the result would be that out of *64* offspring *27 would be normal*, altho only 1 of these would be a duplex normal, all the others being capable of transmitting one or two of the defects, the *remaining 37 would* represent *7 different kinds* of defectives.

If there were four determiners involved, the numbers would run up into the *thousands*.

By way of clarifying this somewhat difficult situation we quote an identical case from Castle (W. E. Castle — Heredity, Appletons, 1911) to whom the reader is referred for a further explanation of this point.

"In each of the cases thus far considered a single unit-character is concerned. Crosses in such cases involve no necessary change in the race, but only the continuance within it of two sharply alternative conditions. But the result is quite different when parents are crossed which differ simultaneously in two or more independent unit-characters. Crossing them becomes an active agency for the production of new varieties.

"In discussing the crosses now to be described it will be convenient to refer to the various generations in more precise terms, as Bateson has done. The generation of the animals originally crossed will be called the parental generation (P); the subsequent generations will be called filial generations, viz., the first filial generation ($F_1$), second filial ($F_2$), and so on.

"When guinea-pigs are crossed of pure races which differ simultaneously in two unit-characters, the $F_1$ offspring are all alike, but the $F_2$ offspring are of four sorts. Thus, when a smooth dark animal is crossed with a rough white one the $F_1$ offspring are all rough and dark, manifesting the two dominant unit-characters, — dark coat derived from one parent, rough coat

derived from the other. But the $F_2$ offspring are of four sorts, viz.; (1) smooth and dark, like one grandparent, (2) rough and white, like the other grandparent, (3) rough and dark, like the $F_1$ generation, and (4) smooth and white, a new variety. It will be seen that the pigmentation of the coat has no relation to its smoothness. The dark animals are either rough or smooth, and so are the white ones. Pigmentation of the coat is evidently a unit-character independent of hair-direction, and as new combinations of these two units the cross has produced two new varieties, — the rough dark and the smooth white.

"Again, hair-length is a unit-character independent of hair-color. For if a short-haired dark animal be crossed with a long-haired albino, the $F_1$ offspring are all short-haired and dark; but the $F_2$ offspring are of four sorts, viz. (1) dark and short-haired, like one grandparent, (2) white and long-haired, like the other, (3) dark and long-haired, a new combination, and (4) white and short-haired, a second new combination.

"Now the four sorts of individuals obtained from such a cross as this will not be equally numerous.

"The expected proportions of the four classes of $F_2$ offspring are accordingly 9 : 3 : 3 : 1, a proportion which is closely approximated in actual experience. The Mendelian theory of independent unit-characters accounts for this result fully. No other hypothesis has as yet been suggested which can account for it." *Page 39.*

### *The Other Side*

From the point of view of feeble-mindedness the case looks different. Feeble-mindedness is clearly an arrest of development at some time previous to adolescence — a stopping of mental development along all lines. This arrest is not necessarily sudden. There is usually a slowing down covering several years.

This is somewhat difficult to explain along the lines of the previous argument. It is not at all as tho the determiner for the development of some little group of cells had been left out, or as tho something intervened to prevent the development of some other group of cells, which would result in one mental process being stopped while the others went on. Whatever has happened seems to have affected *all* the mental processes alike. That is, all that had not developed at the time the arrest took place, failed to develop afterwards.

The fact would seem to be accounted for either by the presence of some determiner which showed itself at the proper time and stopped the further development of the brain, or by the absence of something which furthers development and which is normally present. From one aspect it seems that the condition is more as tho some poison, for instance, had suddenly been injected into the system which stopped the development of the brain uniformly thruout. This comes from the fact that studies of the mentality of these children, at least so far as such studies have gone, seem to indicate that a child that is arrested mentally, say at nine years of age, is like a normal child of nine in everything except physical growth which does not seem to be affected, at least in the high grades.[1] From this standpoint therefore it seems more in accordance with the facts to conceive that feeble-mindedness is a unit character, and due either to the presence of something which acts as an inhibitor, or due to the absence of some stimulus which sends the normal brain on to further development. Of these two we may further suggest that the absence of a determiner that would make for normality is biologically and phylogenetically the more easy to conceive. If this is true we might expect to find normal intelligence not only a unit character but dominant.

Which of these views the better fits our facts we shall consider in the next chapter.

[1] It is not strictly correct to say that a defective of mentality 9 (*e.g.*) is like a normal child of 9 years. For discussion see page 579.

## CHAPTER VIII

## IS THE INHERITANCE OF FEEBLE-MINDEDNESS IN ACCORDANCE WITH THE MENDELIAN LAW?

In attempting to answer this question it will be best to determine what that law would lead us to expect, then to examine the data of the Hereditary Group to see how that expectation is fulfilled. The accompanying diagram, for which I am indebted to Mr. S. C. Kohs, shows graphically all of the possible conditions.

In applying the Mendelian law to human heredity we meet a difficulty, which arises from the comparatively small number of human offspring in a family. When we say the mating of two simplexes gives 1 duplex, 2 simplex and 1 nulliplex, we can only mean that this proportion will be met if there are enough offspring to give the law a chance to show itself. But our simplex man and woman may have only two children; even if there are four they may be all simplex, while if there were four more they might be two duplex and two nulliplex, thus carrying out the law.

To overcome this difficulty it has been proposed to add together all the offspring of similar matings. A hundred children from twenty matings are as good as tho they were from a single mating, provided the twenty matings are similar, *i.e.* all are cases where one parent is simplex and the other nulliplex, etc.

Mendel himself used this method; *e.g.* from 253 hybrids (matings) he gets 7324 seeds; 5474 were roundish, 1850 were angular wrinkled. "Therefrom the ratio 2.96 to 1 is deduced."

Out of 1345 matings in the Hereditary Group we have been able to find 324 matings that could be used in this connection.

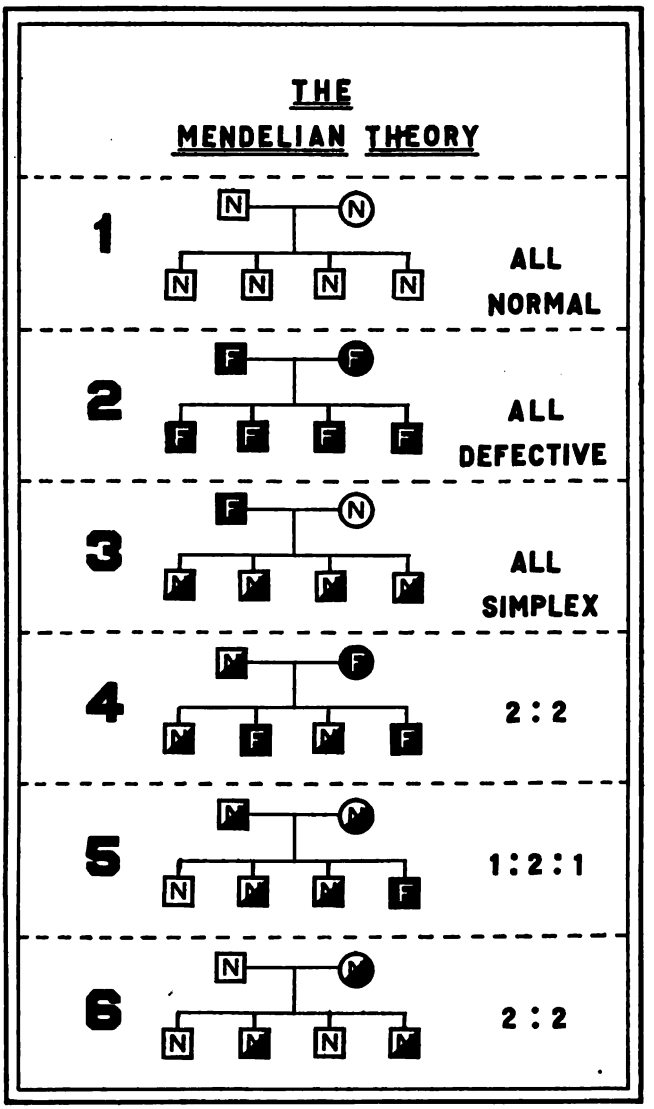


Diagram showing the six possible matings of parents duplex, simplex, and nulliplex, — with the possible offspring: on the assumption that normal intelligence is a unit character and dominant.

When both parents are duplex all of the children must be normal. Of course, we have nothing to do with this type of mating in a defective family.

In the second case, if both parents are nulliplex all of the children are feeble-minded. Reference to Table IV, page 469, shows that this is probably absolutely true in our data. Of 482 children of parents both of whom were feeble-minded all were feeble-minded with the exception of six. The exceptions are so few as to be hardly worth consideration. It is very probable moreover, that some of these are to be explained. There is a possibility of error of judgment. These six may not be as normal as they appear. Further experience with them might show that they are below the level. Neither can we deny that there is a possibility that we have erred in regard to the parents in some of these cases, altho we cannot think that this is at all a likely explanation since we have been careful not to mark any one feeble-minded unless there was strong objective evidence.

There is another explanation, however, which may explain all of these apparent exceptions. One cannot always be sure of the chastity of these feeble-minded women. In at least one case this has been proved to be the explanation. Our first report was that there were in a family two normal children out of four. A careful investigation disclosed the fact that there was another father for these children; he was a normal man which accounted for the difference.

The following chart taken from a pamphlet on Segregation of Mental Defectives, by Dr. Emerick of the Columbus (Ohio) Institution, is a case in point. It required no special investigation. In a white family the father and mother are both feeble-minded, they have twelve children, all feeble-minded but two. These are normal *but they are colored.*

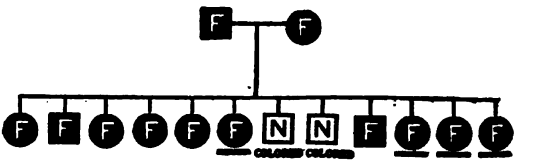

The entire group of matings of two feeble-minded people goes to prove the recessive character of feeble-mindedness. For if this trait were dominant we would surely get, among the 144 matings, some matings where both were simplex and these would sometimes give NN (duplex normal) offspring. We have just seen how rarely (if ever) this happens.

Taking up the other types of matings our method has been to assume the law, then see if the conditions as we find them can be accounted for on this assumption.

There have been two methods of determining the simplex inheritance of the parents: in some cases it has been the study of the ancestors, in others it has been the condition of the offspring.

The reader will find the matings that we have considered, indicated by Roman numerals on the various charts of the Hereditary Group. ( (FF — FF) matings, being obvious, are not marked.)

I — means that the father is feeble-minded, the mother normal but simplex.

II — means that the mother is feeble-minded, the father simplex.

III — means that one parent is feeble-minded and the other normal — either simplex or duplex.

IV — means that one parent is normal but simplex and the other normal, either simplex or duplex.

V — means that both father and mother are normal but simplex.

Matings of the type I and II are the same so far as the Mendelian formula is concerned, that is, they are matings of a simplex with a nulliplex (feeble-minded). We have kept them separate in order to test the question of whether there is a sex-limited, exclusive or prepotent inheritance; whether feeble-mindedness follows either the mother or the father. No. V is the mating of

two simplexes which gives us our classical formula of three to one. In matings IV it has not been possible to determine whether it is a case of a mating of a duplex with a simplex or of a mating of two simplexes. In like manner III may be either a duplex with a nulliplex or a simplex with a nulliplex.

For illustration of our method take mating I on Chart 2. The father is feeble-minded, the mother normal, there are three normal children and two feeble-minded. Assuming that Mendel's law is true of human heredity, that normal-mindedness is a unit character, and that normality is dominant over feeble-mindedness, then it follows that: The father is nulliplex, represented by FF, for if he were simplex (NF) he would be normal. The mother is simplex (NF); she cannot be nulliplex because that means feeble-minded; moreover she has normal children and two feeble-minded parents cannot have normal children. She cannot be duplex (NN) because she has also feeble-minded children and a duplex parent cannot have nulliplex (feeble-minded) children no matter what the mentality of the other parent. Therefore, these parents are properly represented FF–NF.

The argument would be the same if the mother were charted undetermined. On Chart 9 are two matings (marked II) of the same character except that here the mother is FF and the father must be NF.

On Chart 2 mating III, the parents are normal and feeble-minded as before, but there are no feeble-minded children, so we cannot say whether the normal parent is duplex or simplex, since in either case there could be normal children. Of course if there were enough children some would have been feeble-minded if the normal parent were simplex. But with only three children we cannot be sure. We cannot, therefore, count this mating in Group II.

In this manner we have grouped all matings where enough is known to enable us to determine their character.

| Type of Mating | No. of Matings | Total Offspring | D. Inf. and Misc. | Undetermined Mentality | Feeble-minded Offspring | | Normal Offspring | |
|---|---|---|---|---|---|---|---|---|
| | | | | | Actual Findings | Theoretical Expectation | Actual Findings | Theoretical Expectation |
| A FF—FF | 144 | 749 | 149 | 118 | 476 | 482 | 6 | 0 |
| I FF—NF[1] | 42 | 257 | 65 | 48 | 71 | 72 | 73 | 72 |
| II NF—FF[1] | 61 | 374 | 83 | 98 | 122 | 96½ | 71 | 96½ |
| III FF—{NN / NF | 37 | 133 | 26 | 39 | | | 68 | |
| IV NF—{NN / NF | 14 | 54 | 3 | 4 | | | 47 | |
| V NF—NF | 26 | 185 | 38 | 25 | 39 | 30½ | 83 | 91½ |

In the foregoing Table will be found the figures as they were arranged in the preliminary work. The FF — FF matings have been already considered. In the next two (I and II) we have the same Mendelian condition (*i.e.* a simplex and a nulliplex) but we have separated the matings in order to determine whether there were more feeble-minded children when the mother was feeble-minded and the father normal than when the mother was normal and the father feeble-minded.

The 42 matings where the father is nulliplex and the mother is simplex, FF — NF, give the following:

There were 257 offspring of whom 65 were deaths in infancy and miscarriages, and 48 were unknown as to mentality, leaving 144 whose mentality is known; these should be half normal, half defective. That is, the expectation is 72 feeble-minded; actually there are 71. The expectation is 72 normal; the actual is 73.

When the father is simplex and the mother is nulliplex, we have 61 matings with 193 surviving children of known mentality. This gives an expectation of 96½ feeble-minded with an actual of 122; an expectation of 96½ normal with an actual number of 71.

It would seem from this that the feeble-mindedness follows the

[1] In I and II the first letters indicate the father, those following the dash indicate the mother. In all other cases the order is of no significance.

mother to a certain extent; when she is feeble-minded there are more feeble-minded children than the expectation; when she is normal the actual number agrees with the expectation. The explanation is not clear. It has been suggested that the excess of feeble-minded children when the mother is feeble-minded is due to the bad environment which the mother provides. If this is true we seem to have a measure of the environmental influence — it increases the number of feeble-minded children about one fourth. There are however no facts to prove that lack of care produces feeble-mindedness. It is perhaps not unnatural to expect that the mother would have somewhat greater potency than the father in determining feeble-mindedness. There may be something approaching a sex limited inheritance.

These two groups are combined to get the Mendelian results in the case of matings of a simplex with a nulliplex, in the next table.

In the above count we have all the (FF — NF) and (NF — FF) matings *where there were any F offspring* but none of such matings where there were *only N offspring*. In any mating where one parent was feeble-minded and the other normal, we could not be sure that the normal member of the mating was *simplex* since N offspring could come from (FF — NN) as well as from (FF — NF). In many (FF — NF) matings resulting in only one or two children it might happen that they would be the NF (normal) ones, whereas if there had been more the FF would have appeared.

There are 37 matings of this kind (III) with 68 N children. It is fair to assume that there were as many NF as NN mates among these 37 matings and therefore half of them properly go with our (FF — NF) group. (The remainder are recorded in the second table as the (FF — NN) group.) If we accordingly add half of III to I and II, we have the complete figures for the (FF — NF) matings. See the second table — next page.

The mating of two simplexes (V) gives us the following: 26 matings 185 offspring; 38 died in infancy or were miscarriages,

25 were undetermined as to their mentality, leaving 122 cases of whom 30½ should be feeble-minded and 91½ normal, including simplex and duplex. (NF — NF) matings give 3 : 1, N and F offspring. Our results are: normal expected 91½, actual 83; feeble-minded expected 30½, actual 39.

These figures also are surprisingly close but they too are subject to a correction.

In some matings where both parents are N (IV) and there are *no F children* there is no certainty that *both* parents were simplex. Since however all these cases occur in families where hereditary feeble-mindedness is present, we may safely assume that half of them were (NF — NF) matings. (The other half constitute the (NF — NN) matings of Table II.) There are 14 such matings with 47 children. Half of these is 24, divided in ratio of 3 : 1 gives as "expectation" 18 N and 6 F. These added to figures given above show the final record for simplex matings: normal expected 109½, actual 107; feeble-minded expected 36½, actual 39. See following table.

Here again the close agreement of the actual count with the expectation is strongly confirmatory of the theory.

| Type of Mating | No. of Matings | Total Offspring | D. Inf. and Misc. | Undetermined Mentality | Feeble-minded Offspring | | Normal Offspring | |
|---|---|---|---|---|---|---|---|---|
| | | | | | Actual Findings | Theoretical Expectation | Actual Findings | Theoretical Expectation |
| FF — FF | 144 | 749 | 149 | 118 | 476 | 482 | 6 | 0 |
| FF — NF | 122 | 698 | 161 | 166 | 193 | 185½ | 178 | 185½ |
| FF — NN | 18 | 66 | 13 | 19 | 0 | 0 | 34 | 34 |
| NF — NF | 33 | 212 | 39 | 27 | 39 | 36½ | 107 | 109½ |
| NF — NN | 7 | 27 | 2 | 2 | 0 | 0 | 23 | 23 |
| Totals | 324 | 1752 | 364 | 332 | 708 | 704 | 348 | 352 |

In this table will be found in final form the figures on each of the five possible matings.

In the totals of all of these matings the expectation would be

feeble-minded 704, the actual is 708; normal, expectation 352, actual 348. Such results are difficult to account for on any other basis than that feeble-mindedness is transmitted in accordance with the Mendelian formula.

An examination of the matings which we have marked and on which these figures are based will enable the reader to judge of the accuracy of the classifications of the matings that have been used.

Since our figures agree so closely with Mendelian expectation and since there are few if any cases where the Mendelian formula does not fit the facts, the hypothesis seems to stand: viz. normal-mindedness is, or at least behaves like, a unit character; is dominant and is transmitted in accordance with the Mendelian law of inheritance.

The writer confesses to being one of those psychologists who find it hard to accept the idea that the intelligence even *acts like a unit character*. But there seems to be no way to escape the conclusion from these figures.

It might be possible to escape the conclusion of the figures in one type of mating — *e.g.* the (FF — NF) matings which give half N, half F, on the ground of some statistical error, or mistaken interpretation, but when we see each of the types independently giving what the hypothesis requires we are forced to accept the conclusion.

(NN — NN) matings practically never give defective children except by injury. See the Accident Group.

(FF — FF) matings practically always give defective children.

(FF — NF) matings give half normal, half defective.

(NF — NF) matings give three normals to one defective. This is Mendelian inheritance.

In view of this situation it is somewhat comforting to find that there is a school of English writers who incline somewhat strongly toward the view of what has been called "A general intelligence." This view is perhaps best expressed by Cyril Burt, M.A. (See *Child Study*, Vol. 4 — 1911.)

"Our final conclusions, then, may be summarized as follows:

"General intelligence exists, is definable, and can be measured. It can be most readily measured by tests of the higher and more complex levels of mental activity. It may be defined as all-around innate mental efficiency; for excellence at these tests and at tests like them proves to be the expression of a mental property neither merely specialized nor merely acquired, but something all-pervading, *something inherited, something inborn.*[1] Lastly, we may have no hesitation in assuming that such a capacity exists; for its basis may be pictured as a tendency to integration in the structure of the central nervous system. Hence, that child will be the most generally intelligent who inherits a brain which has been thruout laid down for development along the most systematic lines."

Perhaps this is a view that we must come to. At least it is comforting to find that the existence of a general intelligence has already been arrived at by an entirely different method of approach.

NOTE. In this connection it may not be out of place to quote also Prof. Wundt. (*Philosophische Studien*, X. 121–124.)

"And if I were asked in what for me the worth of experimental observation in psychology has consisted, and still consists, I should say that it has given me an entirely new idea of the nature and connection of our inner processes. I learned in the achievements of the sense of sight to apprehend the fact of creative mental synthesis . . . From my inquiry into time-relations, etc., . . . I attained an insight into the close union of all those psychic functions usually separated by artificial abstractions and names, such as ideation, feeling, will; and I saw the indivisibility and inner homogeneity, in all its phases, of the mental life. The chronometric study of association-processes finally showed me that the notion of distinct mental 'images' (*reproducirten Vorstellungen*) was one of those numerous self-deceptions which are no sooner stamped in a verbal term than they forthwith thrust non-existent fictions into the place of the reality."

This is quoted with approval by Prof. James, who adds:

"As I interpret it, it amounts to a complete espousal of the vaguer conception of the stream of thought, and a complete renunciation of the whole business, still so industriously carried on in textbooks, of chopping up 'the mind' into distinct units of composition or function, numbering these off, and labelling them by technical names." (*Talks to Teachers*, p. 21.)

[1] Italics ours.

# CHAPTER IX

## EUGENICS

The large share of attention which has been given to the new science of eugenics, or race betterment, shows conclusively that society is intensely interested in this problem of the improvement of the race. This being the case, the discovery of the high percentage of hereditary feeble-mindedness seems to present a natural point of attack.

The feeble-minded person is not desirable, he is a social encumbrance, often a burden to himself. In short it were better both for him and for society had he never been born. Should we not then, in our attempt to improve the race, begin by preventing the birth of more feeble-minded? This is a program which is attracting much attention.

The eugenist proposes to work along two lines; first, to restrain the ignorant and unintelligent from such matings as will surely result in defective offspring; second, to appeal to the reason of intelligent persons not to marry into families where there is any hereditary taint whereby their offspring may be affected.

Let us consider the second of these plans first. In the light of what has been discovered from this study, can any directions or suggestions be given that shall serve as a guide to persons about to marry? Apparently the facts warrant the drawing of conclusions of profound interest.

We must emphasize first the difference between the hereditary and the non-hereditary cases. According to the most universally accepted biological principles of to-day, conditions that are

acquired by the individual in his lifetime are not capable of being transmitted to his offspring.

There are two parts to a human being, the body or soma, which is individual, and the germ cell which is racial. All traits that are transmitted must come thru the germ cell. Nothing which affects only the body can be transmitted to the offspring. It is still a mooted question whether there is anything that acts upon the body that can get down to the germ cell and affect it. If this can happen then that influence is transmitted. If it ever happens, it is in such unusual and obscure ways that it has not yet been demonstrated. Yet we know the race has developed, which means that somehow various influences and conditions have reached the germ cells and have been transmitted from father to son.

As applied to our problem this means that if a person is feeble-minded because of spinal meningitis he could not possibly transmit his defective condition since it has affected the body only and not the germ cells. There would be no objection eugenically to marrying a person who was mentally defective thru meningitis or any other of the supposed "causes" which are grouped under the head of accidents. No argument is necessary to show that a person feeble-minded from whatever cause is not a desirable mate, but if for any reason such a marriage should be consummated there would be no possible fear of any of the children being mentally defective unless there was some taint of defect in the germ cell. So much for the cases that come in our Accident Group.

Suppose we apply our question to the group of neuropathic ancestry; that is to say, should a high grade feeble-minded person, whose condition is ascribed to neuropathic ancestry, be allowed to marry? and secondly, should a normal person, a brother or sister it may be, of such a defective be allowed to marry? The question is one that lies between the accidental and the truly hereditary cases. In the former we can plead the law of the non-transmissibility of an acquired character; in the

latter we can apply the Mendelian hypothesis and so far as we can see the consequences, we can make fairly definite predictions.

In neuropathic ancestry the case is different. If we are correct in ascribing the feeble-mindedness of these cases to the neuropathic condition of the ancestors then there is probably no danger of the feeble-mindedness itself being transmitted. Nevertheless the fact that the neuropathic condition is so prevalent in these families makes it exceedingly doubtful whether any member of them should marry. Undoubtedly an ideal eugenics would say that they should not. On the other hand, there are in these families many members who are apparently perfectly normal, who have transmitted apparently normal minds and bodies to their offspring. The defect which appears all about them in the other branches does not show in their line. It therefore becomes unsafe, if not impossible, to proscribe marriage for such persons. At some future time a better psychology and a more highly developed biology will perhaps enable us to give a more definite answer to such questions. At present it will depend upon the knowledge, and shall we say, courage, of the persons who propose to marry. As long as they are ignorant of all the problems of which this book treats, they will marry just as such persons always have married. To those who know the difficulties, the probabilities, it will be the question of how much they dare to take the responsibility, coupled with how keenly they feel that responsibility.

In the present state of our knowledge, neither the nearest friend nor the expert can go further than to give to a person from such a family, who suffers from any of these disabilities, more or less urgent advice that he should not marry. If he does not suffer in this way we cannot even give this advice but must admit the possibility that, since he himself shows good mentality and good physical constitution, it is entirely possible that he may have escaped all the taints that are found in the family.

In the case of hereditary feeble-mindedness the situation is quite different. It is clear from the data already presented that

feeble-mindedness is hereditary in a large percentage of the cases, and that it is transmitted in accordance with the Mendelian formula. The significance of this second conclusion lies in the fact that, knowing the method by which it is transmitted, we are able to predict the consequences of any mating providing we know all of the conditions. The case may be made concrete and definite by taking the different possible combinations and considering the consequences in each case.

First: if both parents are feeble-minded all the children will be feeble-minded. It is obvious that such matings should not be allowed.

Second: when one parent is duplex normal and the other feeble-minded all the children are normal but all are capable of transmitting feeble-mindedness, — we say technically they are simplex.

It would seem that it ought to be unnecessary to urge that no normal person should ever marry a feeble-minded person, but this sometimes happens, it is therefore a matter for society to consider. The fact that all of the children of such matings appear normal has undoubtedly contributed to the argument for such matings. In the past, being ignorant of the Mendelian formula in its application to this problem, we have not realized that it is the second generation, not the first, that shows the evil effects of such matings. For the sake of the illustration let us assume that such a mating has been made. A normal person from normal ancestry on both sides, in other words a duplex normal man or woman, mates with a feeble-minded person, all the children will be normal but simplex, as above stated. That is, they will have inherited normality from only one of the parents, and will have inherited feeble-mindedness from the other. Let us suppose that these children marry; what will be the consequence? There are three kinds of marriages open to them: these normal but simplex persons may marry feeble-minded persons, simplex normal persons like themselves, or duplex normal persons. Consider each one of these separately.

First: this simplex normal person marries a feeble-minded person, then according to the Mendelian hypothesis, half of the children will be feeble-minded, half will be normal, but simplex.

It is necessary to reiterate at this point one of the peculiar limitations when we attempt to apply the Mendelian formula to human heredity. In plants and in many animals the offspring are sufficiently numerous so that the proportions of the formula are easily demonstrated in any mating. In the human family the offspring, being born one at a time, may number anywhere from one to many. Usually, as we know, in modern times the families are relatively small. When we say that if a simplex normal person marries a feeble-minded person half of the children will be simplex normal and half will be feeble-minded, we mean that in the long run this ratio will hold. We do not mean that if there are four children two of them will be feeble-minded and two normal. If there were only four children it might happen that they would all be feeble-minded, or it might happen that they would all be simplex normal. In other words we are dealing with the doctrine of probability and in order to give that doctrine a chance to be demonstrated there must be a large enough number of cases. It is like pitching pennies, we know that a penny thrown in the air will come down half of the time heads up and half of the time tails. If one throws a penny only half a dozen times he may get all tails or all heads or any other combination. If he throws it a hundred times he will come very near to getting fifty heads and fifty tails. According to the doctrine of probabilities there is an even chance that the first child of such a mating would be either feeble-minded or simplex normal. If it were normal, there would be only one chance in four that the next child would be normal. If that one happens to be normal there would be one chance in eight that the third child would also be normal. Finally, if this happened also to be normal there would only be one chance in sixteen that the fourth child would likewise be normal.

Consider the next kind of mating that is open for this simplex normal child of our original couple. He may marry a simplex normal person like himself; the result here will be the Mendelian ratio of three to one, that is, there will be three normal children to one feeble-minded; but of these three normal children only one will be duplex normal, the other two will be simplex and capable of transmitting the defect just as their parents did. It is in this case and the following one that we get the greatest difficulty and also the greatest help from an understanding of Mendelism. Since both these persons are apparently normal, even if they are conscious of the eugenics problem at all, they are apt to conclude that because they are normal their children will be normal. The fact is, that only one child in four will be duplex normal, and one child in four will be feeble-minded. How then shall normal people know whether it is safe for them to marry? The answer is — thru a study of their ancestry. Taking the assumed case as an illustration — the man was the child of a feeble-minded father and a normal mother; therefore, he was not a duplex normal man; he marries a wife that is also a child of parents one of whom was feeble-minded and the other normal. Such persons should know the nature of their parents and therefore know whether they should marry or not. The rule here is simple and easily followed. No person who knows that he is simplex in regard to intelligence should marry a person who is also simplex.

Consider the last possibility for this simplex person; he may marry a duplex normal person; the result here will be that all of the children will be normal but half of them will be simplex, the other half being duplex. From his own standpoint, this simplex person has done the one wise thing; this is what Dr. Davenport means by insisting that weakness should marry strength. From the standpoint of the normal person whom he marries the case is quite different; it then becomes strength marrying weakness and the bringing in of weak-

ness to at least half of the children. These simplex children may marry duplex normals as their simplex parent did and so the defect may remain dormant or recessive as long as weakness marries strength, but whenever any descendant of this family who is simplex marries a simplex person the defect may reappear.

These constitute all of the possible combinations of simplex with simplex, with duplex or with feeble-minded.

There is a much more difficult problem which may be discussed in this same connection. The thotful, intelligent person who considers the laws of eugenics for his own case has, in what has already been said, a very definite guide. When he has decided that he wishes to marry and is satisfied to marry a particular person, the next question to be considered is, does he wish and is he content to marry into a particular family. He needs to know his own condition, whether simplex or duplex, and the condition of his proposed mate even when she is normal. He knows that if either her father or mother was feeble-minded that she at best is only simplex. But if her father and mother were each simplex then there is one chance in four that she is duplex normal. And still further, if one of her parents was duplex normal and the other simplex then there is one chance in two that she is duplex and one in two that she is simplex. It is a question of chance; in the one case there is one chance in four that she is normal, and assuming that he himself is duplex normal their children will all be normal. Or in the other kind of family there is one chance in two that she is normal and their children will be normal.

Among several normal children, is there no way of telling which are duplex and which are simplex? In the case of the typical Mendelian formula where a simplex man marries a simplex woman and the children are in the ratio of three to one — or more strictly, one normal duplex to two normals simplex to one feeble-minded — is there no way of telling which is the

one that is duplex and which are the two that are simplex? There is no way.

In certain fowls white color is dominant; if these are crossed with a brown variety, three of the offspring are white and one is brown. Of the three whites one will produce white offspring, the other two are simplex and will produce white and brown. In this case there is a way to tell the one which will produce the white chick. This duplex fowl is absolutely white while the two simplex have a few colored feathers, known technically as "ticks." It is a very tempting notion to conceive that human beings might manifest some "ticks"; that a simplex normal person would not be quite as intelligent as a duplex normal person; or that the simplex person would have some physical deformity or abnormality or peculiarity which may be taken as indicating the simplex character. Tempting as this view is and reasonable as it might be, there is at present little or no foundation in fact for it. It may be that in the future such a thing will be demonstrated.

One thing seems fairly obvious, a person whose family is tainted with defectiveness should not take any chances by marrying into a family that is also tainted. If a man knows that he and his family are entirely free then it is a problem as to whether he will take the chance of one in two or one in four, or whatever it may be, by marrying into a tainted family. This is all that the student of eugenics can propose at the present time.

We return now to the first part of the eugenist's program — the control by society of the matings of those people who have not intelligence enough to control themselves. It is perfectly clear that no feeble-minded person should ever be allowed to marry or to become a parent. It is obvious that if this rule is to be carried out the intelligent part of society must enforce it. There is to-day a goodly quota of people who have so great faith in law that they believe that if we can only get marriage laws on the statute books our problems are largely solved. A

little thot shows that this is an unusually fruitless procedure in the case of the feeble-minded. They are not only lacking in control but they are lacking often in the perception of moral qualities; if they are not allowed to marry they are nevertheless not hindered from becoming parents. So that, if we are absolutely to prevent a feeble-minded person from becoming a parent, something must be done other than merely prohibiting the marrying. To this end there are two proposals: the first is colonization, the second is sterilization.

Colonization is efficient and does not offend any of our sentiments but as a solution of the entire problem it is impracticable. That is to say, we cannot possibly colonize all of the feeble-minded persons. First, because it takes too long to provide the colonies, even tho we were willing to provide the money; second, a large part of these people are in childhood under the control of their parents and their parents will not consent to their being colonized. When they become adults we have no hold upon them until they commit some crime; and they can do a vast amount of mischief without ever getting into the hands of the law.

Sterilization, even in the form of vasectomy, is violently opposed by many people whose sentiments are offended; even if all were satisfied with the practice, it could not under any laws as yet passed, or any that have so far been proposed, reach any considerable percentage of the defectives. It may be made very useful in a large number of individual cases but as for solving the problem of feeble-mindedness it has practically no effect.

The opponents of eugenics claim that nature will take care of the whole matter. It is often asked — does not feeble-mindedness tend to run out? Could not the stream purify itself? A study of the charts here presented will hardly be found reassuring in this direction. Yet if the situation were controlled by high eugenic ideals there is no doubt that there would be a strong tendency toward purification of the stock. If a simplex person,

for example, always married a duplex, in which case half of the children would be duplex, there would certainly be cases in which only the duplex children would be born, and so the simplex condition would be eliminated. That this does actually happen sometimes seems to be shown on the charts, altho of course there is no proof of this. Even where there are three or four generations of normal people one can never be sure that the feeble-minded taint is not recessive and only waiting for a proper mating to reappear.

It must be remembered that in all of this we have been considering only feeble-mindedness. The question of insanity, epilepsy and other heritable traits do not concern us here except in so far as it is a question of whether the marrying into families tainted with these conditions has any peculiar effect upon feeble-mindedness. From a study of the insanity recorded on our charts it does not appear that a person who marries into a family where there is insanity would be in any especial danger of having feeble-minded children. Insanity itself may be hereditary and enough to bar such a marriage, but the question of feeble-mindedness hardly enters unless it is a thoroly neuropathic stock.

# CHAPTER X

## PRACTICAL APPLICATIONS

First has been considered the various social problems and the probable relation of these to feeble-mindedness. Then were presented the data which have been collected at the Vineland Research Laboratory. These have been studied and arranged so as to present as clearly as possible whatever conclusions could be logically drawn from them. It remains now to consider what practical use can be made of such facts as have been deduced.

WHAT IS TO BE DONE? We have already seen that a large percentage of paupers, criminals, drunkards, prostitutes, and other ne'er-do-wells are mentally defective. A study of the family history of feeble-minded persons shows that at least two-thirds of feeble-minded people have inherited their feeble-mindedness, and that this feeble-mindedness is transmitted in accordance with the Mendelian formula. It has also shown that the size of families among these defectives is at least twice as great as among the general population. In other words the feeble-minded population contributing largely to our pauper, criminal, drunkard and prostitute classes is growing rapidly. It would seem from this that society cannot attack these problems in any more successful way than to attack one of the fundamental causes of the problem, namely: feeble-mindedness. And we must attack this from the standpoint of inheritability. It might be a defensible position to propose to go on as we are doing with the pauper and criminal, drunkard and prostitute, taking care of them until they die, if the present group were the end. But the instant we realize that these groups are continually being replenished,

that our problem instead of growing less is actually growing greater, we discover how hopeless is the situation, unless we can accomplish more in the future than we have in the past. More than half of the states have given some attention to the question of feeble-mindedness, to the extent at least of building an Institution to care for them. But very few, possibly none, have as yet caught up with the problem, that is to say, they have not done enough to take care of the natural increase to say nothing of reducing the source of supply. The problem is a large one and the difficulties are great, but it would appear that we have not taken advantage of those things that are actually within our control.

PAUPERS. The paupers in our almshouses are under our control. Probably half of them are feeble-minded; and many of these feeble-minded paupers are continuing to propagate feeble-mindedness. One of the first places to begin therefore in attacking this matter, is in the almshouses. Every inmate of every almshouse should be examined as to his mentality and as to his family history. In every case where it is discovered that there is feeble-mindedness, or that the individual belongs to a mentally defective family, everything possible should be done to prevent the further propagation of that stock.

THE CRIMINAL. In the case of the criminal we are not only neglecting an opportunity but we are committing an injustice. If half of the criminals in our jails and prisons and reformatories are feeble-minded, they are irresponsible. Shutting these people in a jail is as great an injustice as the punishment of any innocent man. Society may be forgiven for its past action in this matter for it knew no better; but now that we know the facts, not necessarily the exact proportions, but the general fact that large numbers of these people are mentally incompetent, it is our duty to act. Every penal institution must be examined and the number of its defectives determined; then these defectives must be cared for, not as criminals, but as feeble-minded.

THE DRUNKARD. The drunkard presents a peculiar problem in connection with which we have acted most irrationally. We have attempted to punish him because he is a nuisance but our pity is so strong that nowhere is the law enforced in regard to such cases. We arrest them and fine them and then let them go so that we can arrest and fine them again, still hoping in spite of all our experience that somehow the arresting and fining will have a curative effect.

A large proportion of the drunkards are feeble-minded and neither responsible for their drinking nor for what they do when intoxicated. As with the others, so with the drunkard; there should be a careful mental examination and treatment in accord therewith. If it was understood that this would be the procedure it would doubtless be easy to have nearly all of the drunkards arrested. We should in this way get hold of a large number of mental defectives that we cannot touch by any other method.

PROSTITUTES. And what of the prostitute, that committer of a crime that is considered as so peculiarly offensive in human society? Let a man seduce a 14 or 15 year old girl and we punish the man, we extend our pity and sympathy to the girl, we call her a child who has been abused and mistreated. More than half of the prostitutes are more truly children than a 15 year old girl; they are more like children of ten or eleven in their mentality, altho adults physically. These people need protection not punishment nor preaching. They should be taken into custody by the officers of the law, not necessarily for punishment, surely not to be fined and sent out again to do the same thing over, but to be treated, to be examined as to their mentality. All those who are found to be feeble-minded should be cared for as feeble-minded.

NE'ER-DO-WELLS. I have alluded in an earlier chapter to the person who is called the ne'er-do-well and it has been suggested very often that he too is a feeble-minded person. What shall we do with him? Under our present ideas we can do nothing officially. He commits no crime, he is not a nuisance in the real definition of that

term, and there is no way in which society can arrest him; but much can be accomplished by recognizing him. Now that we know what feeble-mindedness is, and we have come to suspect all persons who are incapable of adapting themselves to their environment and living up to the conventions of society or acting sensibly, of being feeble-minded, we are ready to think of all these ne'er-do-wells as possible defectives. Doubtless the more familiar we become with defectiveness the better we shall be able to judge by such observation as we can give of the truth of our diagnosis. What then? If we can do nothing more, at least the mere knowledge of the condition will protect us to a large extent. That is to say, once being conscious that these people are defective we shall protect them against themselves in many ways; not officially by arresting them, but by refusing to place responsibilities upon them, and by exercising as much control over them as we do over normal childhood.

In looking at the problem of feeble-mindedness itself we are often confronted with the difficulty of getting hold of the cases. There are so many feeble-minded persons, especially if we include this high grade, that we cannot take care of them. Many of them do not commit crimes nor become nuisances, and even if we had an abundance of colonies and institutions it would be difficult to get them into them. But of these people that we have been discussing, we have a large percentage that are officially in the hands of the law. The practical problem is, will the officers of the law take care of the feeble-minded persons that are thrust upon them? It must not be forgotten in all of this, that it is not only a question of taking care of these individuals, so that they themselves are less a menace to society directly, but it is a question of heredity. A large percentage of these people are not only obnoxious themselves but they are propagating their own weak-mindedness and continuing our social problems.

Our present methods, besides being unjust and cruel and thotless and careless, are doing nothing to prevent the continuance

of this species of humanity. It is hereditary feeble-mindedness that is at the basis of all these problems, and it is hereditary feeble-mindedness that we must attack and attack hard if we would solve them.

Stanley Hall has said that one's feelings and impressions are often truer than one's logical reasoning. One cannot study a mass of data like the preceding without having certain large and general impressions, which, while not demonstrable by a logical array of premises with their conclusions, nevertheless have a certain consistency which renders them helpful in any attempt that may be made to use the facts discovered for practical purposes.

The first of these we may designate as a general viewpoint of the problem of mental defectiveness — the conception of mental levels, or levels of intelligence. Intelligence as here used connotes more than the psychological *intellect*, it is more the popular understanding of the term, which, when reduced to psychological expression, means all of the essential mental processes in such proportion as to render the possessor able to adapt himself to his environment. It thus includes not only the intellect but the sensibilities and the will, to use an older classification.

Conscious adaptation to one's environment involves, on the one hand, a taking into account one's instincts, impulses, emotions, feelings; on the other a perception of the situation in all those details to which adaptation must be made. It involves a calling up of past experiences which show the result of various lines of action involving association, judgment, reasoning; it involves an attention to the situation and certain habits of action therewith connected. The amount of each one of these processes that may be involved, and the relative proportion of them all is determined by the environment itself. A highly complex situation may involve the highest degree of all of these processes, while a simple situation may involve only a part of them or all of them in a slight degree. We may thus have varying degrees

or levels of intelligence which can be measured by the degree of complexity of the environment to which the individual is capable of adapting himself.

Such a conception ought not to be difficult to entertain since the evidences are at hand. All men have their limitations, some high, some low. Strictly speaking, a feeble-minded person is not one who lacks intelligence, but one who lacks a particular degree of intelligence. That degree or level is fixed not arbitrarily but by the social necessity. Intelligence is thus relative. This again is a common enough idea; we say of a man that he is fairly intelligent, or very intelligent, or among the most intelligent; or we go down the scale and say he is only moderately intelligent, or has very little intelligence, or that he is unintelligent, meaning of course, that his degree of intelligence is abnormally low.

The degree of intelligence which marks the line between the feeble-minded and the normal person has been defined as that degree below which the possessor cannot manage himself or his affairs with ordinary prudence. Now it is the environment which determines how he must manage himself and what affairs it is necessary for him to control. In consequence of this it happens that a man may be intelligent in one environment and unintelligent in another. It is this point which Binet has illustrated by saying "A French peasant may be normal in a rural community but feeble-minded in Paris." The peasant life is simple; the environment requires little adjustment. In Paris, it is different, all is complicated and requires the highest functioning of certain mental powers in order to enable one to adapt himself. That fact should be borne in mind thruout this discussion.

We have practically agreed to call all persons feeble-minded who do not arrive at an intelligence higher than that of the twelve year old normal child. But it must be remembered that this is merely an average, a norm from which to measure and by

which we can compare different individuals. It does not mean and must not be taken to mean, that the person of only ten year old intelligence is incapable of functioning in *any* environment, any more than it means that the person of fourteen year old intelligence is capable of functioning in *every* environment.

We are already struggling with the problem of the defective delinquent, the individual whom we cannot call feeble-minded according to our present standard, and yet who has not intelligence enough to function in the environment in which he finds himself. Such a person very probably has fourteen or sixteen year intelligence, and would function very well in any environment which required no more than that amount. But he happens to have been born or has got into an environment that requires a twenty year old intelligence and he therefore is defective.

The same is true if we go below twelve years. While we say that the child of ten-year mentality is feeble-minded this does not mean, as has been said, that he cannot function in any environment. It does mean that as society is now constituted in most civilized countries, he cannot function in the ordinary group; but he could function in a simpler one. Since he is in the minority and the majority has made the environment what it is, it would seem to be incumbent upon the majority to provide a special environment for this defective individual, with the expectation that in that special environment he would be normal — that is to say, he would be able to adapt himself and to function satisfactorily. This expectation has been abundantly fulfilled wherever it has been tried.

That there are mental levels is thus seen to be a tenable hypothesis and a possible key to the situation. We shall return to it later.

The second of these impressions obtained from studying the data relates to heredity. We have seen that feeble-mindedness is hereditary; can we say that these grades or levels of intelli-

gence of which we have spoken are directly transmitted as is the color of the eyes or the hair or the stature of the body? It is our conviction that, other things being equal, the children will have at maturity the same level of intelligence as their parents. This is not a new discovery altho our studies of feeble-mindedness have made the whole matter clearer than perhaps it has previously been made. Furthermore, it must be remembered that in such matters we can only speak in general terms. The intellectual level is not transmitted from father to son with the same accuracy that blue eyes are transmitted.

In the case of the intellectual level there are too many factors for us to be able to show a long series of precisely the same mentality. It is, however, perfectly demonstrable that in a general way this principle holds true. One has only to recall the Edwards family, the Adamses or the Lees, and scores of others to see what this means. A perusal of the biographical dictionary will show hundreds of families that have maintained the same high level of intelligence thru many generations.

Coming down in the scale from those who have had a national reputation we find that what we may call the average citizen in his community has maintained about the same level of intelligence as his father and grandfather who were also men of average intelligence. And it is only by way of completing the series that we find that among the mental defectives of the pure hereditary type the level is maintained. If the child is a moron it is probable that the father or the mother or both were morons and the grandparents also. Our families show this in many cases.

The same holds for the high grade and the middle grade imbeciles. Defectives of lower grade than the middle imbecile seldom marry and so our series ceases. As explained in another place, the children of lower mentality than middle imbecile, who are of hereditary feeble-minded origin, have their low grade of mentality either as the result of added disease or because they are exceptions to the rule, and exceptions we cannot often explain.

The fact of the transmission of the intellectual level becomes of tremendous significance in connection with the social problems. It is furthermore greatly complicated by the biological principle that if the condition is due to disease or acquired in any other way it will not be transmitted. This shows once more the necessity for separating the two elements, the one of pure or inherited feeble-mindedness from feeble-mindedness due to some extraneous cause.

A third point of view, or principle, that has come out of the study of these defective minds is of great importance for their training. This principle is somewhat difficult to state but may be put in this form: a person can never be trained to do intelligently any task the doing of which requires intelligence of a higher level than that to which he has attained. It is difficult to realize that fact when we consider only normal people. The view has been strongly impressed upon us all that any one can do whatever he wills to do, and we are unwilling to give up that belief, in spite of the fact that we see many persons attempting things that, as we say, are beyond them. We seem to be very unwilling to give up our prejudice that nothing is really beyond us. With the mentally defective, however, this becomes easy to demonstrate. The histories of our children as recorded give scores of illustrations. They are in fact so many tests of the principle. Our teachers with a delightful optimism have tried over and over again to teach a child with the mentality of four to do things that can only be done by a child of the mentality of six or beyond.

Before we understood as much about the defective mind as we now do, it was always expected that many of these children could learn to do much of the ordinary school work. Only a few years ago it was a proud boast of Institutions for the Feeble-minded that their school departments were exactly like the public schools. Every child that gave any promise whatever, that is to say, who was of the middle imbecile grade or above, was sent to school and every effort was made to teach

him everything that the school could teach. If the reader will turn back and read the sentences that refer to the accomplishments of our children, taking them as they are arranged by mental age, he will discover that all those of any one age have had practically the same history. They have tried to do great things; the teachers have persisted in their efforts to teach all things to all children; gradually the higher things have been dropped and they finally settled down to those attainments which are commensurate with the mentality of the particular child. For example, those who have a mentality of 10 or 11 are doing some of the finer and more complicated work of the Institution, in the shops, in the household, on the farm or in the garden. Those who test 8 or 9 are doing the coarser work in the shops or on the farm or at the house. Those of mentality 10 or 11 have learned to read a little. Those of 8 or 9 perhaps got into the First or Second Reader but not farther. Those who test 6 or 7 have never succeeded in getting anywhere with the three R's and while they did some manual training and shop work in school, after leaving school they are not found in the shops but only on the farm and in the house, there doing the simplest kind of work. Altho every effort, born of a blind devotion to an ideal, has been made to make these children normal, or at least of relatively high grade, it has invariably failed and they have learned nothing that is beyond their mental age.

This is of profound significance for the training of the defectives of the future, and is it of any less importance in the training of normal children? The principle must be as true of normals as of defectives. It would seem clear therefore, that if we would train our normal children wisely without wasting their time or energy, or running the risk of discouraging any further effort on their part, we ought to discover: first, how much intelligence is required for the various subjects that we present to them; and secondly, what level of intelligence each person has reached so that we may know whether he is ready for the proposed

subject. This is the next great step in the pedagogy of the future.

We may now consider what bearing these principles would have upon the problems growing out of low intelligence.

First we have illustrated the "levels of intelligence" view by showing that different levels of intelligence can function in different environments. Let us now apply this definitely to the problem of caring for these mental defectives.

As we have said, it is clear that the people of higher intelligence must, in self-defense if for no other reason, care for those whose intelligence is too low to enable them to care for themselves. In accordance with the principle we are discussing, this can be done by providing a sufficiently simple environment.

The amount of care and effort which the majority, the so-called intelligent people, must put forth in order to create an environment in which these lower grades of intelligence can function, varies inversely as that intelligence. Beginning with the lowest idiot, the environment consists of a comfortable home with an attendant who prepares the food and feeds it to the child, and performs whatever other labor is necessary to make the child comfortable and happy and his presence at all tolerable to those who thus care for him. This we usually call custodial care.

Those who have the intelligence of a child from three to seven, technically called *imbeciles*, also require more or less custodial care, altho the higher division of them can largely take care of themselves so far as the immediate necessities are concerned. They cannot provide for the future, they cannot even meet the little emergencies which arise in connection with such occupations as they may be trained to perform. They must, therefore, have constant oversight and must be given occupation which presents as few emergencies as possible. The lower half of this group will do little but sit around or walk about, pick up sticks, carry stones or the like; but the upper group, those of mentality

from five to seven, may be trained to simple occupations which they can do over and over again, provided, as already said, there is some one having the oversight of them to step in whenever any emergency arises. Both of these, the idiot and the imbecile, therefore, require segregation, colonization, where the environment has been simplified to the last degree.

We come now to the moron, the child of from eight to twelve years of age mentally. We will get an approximate idea of the needs of this grade of intelligence if we recall the normal child of from 8 to 12, for it has been determined that these defectives are very like normal children of the corresponding age. Of course the similarity is not exact. His physical growth and especially his sex development react upon the defective to give him certain characteristics not found in the normal of the same mental age. His environment and experience have also made some changes in him, altho these changes are slight because being defective he does not take in the environment or profit by experience. It must not be forgotten also that the defective child lacks energy. He is consequently not active, inquisitive, interested like the normal. His emotional reactions are less marked. In spite of all these differences, to say that he is like a normal child of the same mental age is to describe him much more accurately than can be done in any other way, and to regard him and treat him from that standpoint is the most useful and helpful as well as the safest procedure. Bearing these two facts in mind we can easily work out the program for this grade.

Let us consider a mentality of 10 in order to have a specific case. A normal boy of 10 can learn to do a great many things and can do them well. There are many things also that the normal boy could learn to do that he could not himself do because of physical inability. That incapacity is not present with these defectives, because as we have said, physically they are like men and women. Therefore they have in that way greater

capacity, that is a larger range of capacity, than the normal child of the same age. A normal child of ten does a great many tasks for which he has been trained. No one expects a normal child as a rule to set himself to work, to keep himself working, or to use good judgment in meeting the emergencies that arise in connection with his work. This is precisely the case with the defective of this grade. All this means that we must provide him with an environment in which there are few emergencies, in which the activities call for intelligence of his level and may be carried on by habit. This may include much of the routine of farming, of housework, and many kinds of simple industrial occupations. These pursuits, however, require more or less of planning and there are inevitably more or less emergencies, which means that there must always be a person of higher intelligence who can be called upon at a moment's notice, who will make the plans from day to day. This at once suggests a farm colony and segregation so much discussed at the present time.

In this connection the following industrial classification is of interest.

This classification was made in the following manner: Every employee at the Vineland Training School was asked two questions about every child in the Institution, viz.: *What does he do? What can he do?* The answers were grouped and all those of the same mental age were put together. From the many answers in each mental age group an expression was sought that would describe the activities of the group. The children of the same mental age were often doing different things, and the grades sometimes overlapped. One does not expect a generalization to fit individual cases. On the whole however the classification has proved wonderfully accurate. While some children of five-year mentality (*e.g.*) are doing better and some worse the great majority are doing work that is covered by the expression, "Only simplest tasks."

INDUSTRIAL CLASSIFICATION

| MENTAL AGE | INDUSTRIAL CAPACITY | GRADE | |
|---|---|---|---|
| Under 1 year | (*a*) Helpless. (*b*) Can walk. (*c*) With voluntary regard | Low | Idiot |
| 1 yr. | Feeds self. Eats everything | Middle | |
| 2 yrs. | Eats discriminatingly (food from non-food) | High | |
| 3 " | No work. Plays a little | Low | Imbecile |
| 4 " | Tries to help | | |
| 5 " | Only simplest tasks | Middle | |
| 6 " | Tasks of short duration. Washes dishes | High | |
| 7 " | Little errands in the house. Dusts | | |
| 8 " | Errands. Light work. Makes beds | Low | Moron |
| 9 " | Heavier work. Scrubs. Mends. Lays bricks. Cares for bath-room | | |
| 10 " | Good institution helpers. Routine work | Middle | |
| 11 " | Fairly complicated work with only occasional oversight | High | |
| 12 " | Uses machinery. Can care for animals. No supervision for routine work. Cannot plan | | |

One important correction must be mentioned, as it is a matter that bears upon the problem of the feeble-minded. We soon found when we attempted to group our cases that those children who were over 20 years of age chronologically were a disturbing factor in our plan. They could not be grouped with the others of the same mental age. Some study of the situation showed that these older persons were doing tasks that seemingly required a higher mentality, but they were doing them not intelligently but *automatically*, that is after long train-

ing and drill they had learned to go thru the motions in a more or less efficient manner.

This well illustrates the way in which feeble-minded persons sometimes seem to have an intelligence beyond their *mental age.* The man who is 40 years of age, but of ten-year mentality has had 30 years in which to learn not only more ten-year accomplishments than any one normal boy of ten could acquire, but also he has had time to learn to do by habit and drill many things that he cannot possibly understand. In making the foregoing classification we threw out all cases who were over 20 years of age.

Since we have begun to realize the enormous number of defectives we are bewildered at the thot of segregating them all. There are between 300,000 and 400,000 feeble-minded persons in the United States. That would mean 1000 colonies of 300 each, or 300 colonies of 1000 each — from 2 to 30 institutions in each state according to the population. In view of such an enormous undertaking we naturally look about to see if anything else is possible. Under the present social conditions it is hard to think of any other treatment as being adequate to the situation.

But when the mountain would not come to Mahomet, Mahomet went to the mountain. If we cannot remove the mental defective from society to a colony, we can at least colonize him where he is and possibly this may be made quite as satisfactory as the other plan. Indeed it requires only a little optimism to believe that it may be better than the other. One of the main reasons that the moron is so dangerous under present conditions is that he is not understood; he is assumed to be normal, he is treated like a normal person and is expected to react like a normal person. There is no evidence to prove that the feeble-minded person taken in the beginning, understood and properly treated, becomes vicious, bad or dangerous. On the contrary there is much to prove that he is not vicious; he may be made so by mistreatment but he is not so naturally. A menace to society? Yes

when mistreated, when not cared for, when allowed or compelled to bear the burdens of intelligent people. If a nine year old child is left alone in a house with fire and matches and he sets fire to the house, — who is to blame, the child or the people who left him in such a position? In precisely the same way the feeble-minded in the world to-day are a menace to society, because we have not understood them, because we have placed them in an environment where they easily go wrong. But cared for and protected, as all wise parents care for their children, these children need be no more of a menace than other children are.

Suppose, for the sake of making the matter clear, that every normal person recognized these defectives, that a moron as he grows up is recognized as a moron; altho full size for a 20 year old boy, with a physique as healthy and comely as that of the average, all realize that he has a mind of 8 or 10. What will this changed attitude or condition mean? In the first place it will mean that we will teach him in school only those things that a ten year old child can learn. This will leave him with a minimum of the three R's and a maximum of manual and industrial training. Suppose he is ready to go to work; he seeks employment; he thinks he would like to run an elevator — Will any one employ him? Does any one employ a ten year old boy to run an elevator? Why not? Not because he has not the strength, not because of the Child Labor Law, but because a ten year old boy is known not to have sufficient judgment to manage a machine where a slight error might be so serious.

If it is asked how the employer is going to know that this likely-looking man of adult years and normal-looking physique has only the mentality of a 10 year old child, the answer is at hand. There must be a registration bureau where the grade of intelligence of all such persons is recorded. Until some other agency is established for this purpose the public schools must serve in this capacity. Under our compulsory education laws every child must attend school. Our school officers are already

discovering that for their own efficiency they must determine the mentality of their dull children, and must provide for them such training as they are able to take. They will record the degree of efficiency in terms of mental capacity. But what will impel the employer to seek the information that he can obtain from this school system? In many states the employers already have the strongest kind of motive to seek this information. This is in the Employers' Liability Law. Employers will be quick to learn that there are these defective persons and that the danger of employing them in complicated work is very great. A man who employs a mental defective to run an elevator will sooner or later be compelled to pay for injuries that result from such a boy's lack of judgment. He will then seek for the information that will protect him; and will act upon that information.

Therefore, if our 20 year old boy sought the job of running an elevator but was known to have only ten-year intelligence, he would not secure the job. He would however secure such a job as a ten year old boy could do. Besides getting employment that fitted his intelligence he would be treated as a 10 year old child, he would be guarded and protected from dangers of all kinds by all persons who had intelligence. With this protection born of an understanding of his condition he would get along very well; having been properly trained as a young boy he would probably be nearly if not quite self-supporting. If not quite self-supporting he would be a ward of the state and whatever he lacked of enough to support himself would be made up to him in the proper way.

This could easily be arranged thru the Police Department or the Probation system, or the Department of Charities, and would be justified on the understanding that if this were not done the individual would become a pauper or a criminal and cost society vastly more because then his entire support would be at public expense. Thus the problem would be largely solved.

In a goodly percentage of the cases he would live out his life pleasantly, happily, and be relatively useful.

Our first problem then is to recognize the moron. By suitable mental examination they must be discovered, and discovered as early as possible. This is best done in public schools. If a child is backward he must be carefully watched. If it is only a temporary matter or one due to physical causes which can be removed, he will eventually be normal. But if he is really mentally defective it will soon show and as soon as it is determined his treatment must begin. It is then a matter of education, of training. We must learn what this mental defective can do, what kind of training is profitable to him. At present the indications are that comparatively few people who are mentally defective are ever able to learn to read, write and count, or in short to do the ordinary school work. It is even questionable whether those who are able to do this after an enormous effort ought to be compelled to make the effort; whether their efforts cannot be better utilized in other directions which will make them more useful and happier.

We are beginning to learn, not only how to recognize them, but how to determine what degree of mentality they possess, or where in the scale of development their arrest has taken place. Careful studies of this problem will show us the kind of training that is adapted to each one. Trained along these lines from early childhood, kept from learning vicious ways and bad habits, they remain innocent children with much of the naïveté and attractiveness of normal children. They are simply perpetual children. They may live to be sixty years of age and still remain the same childlike persons that they have been for fifty years.

There are many things that they can be trained to do with sufficient proficiency to pay for their cost of maintenance. Here then, is perhaps the solution of this part of the problem — early recognition, careful determination of the degree of

defect and careful training fitted to make them happy, useful, and self-supporting under direction.

It will be seen that what we have said here is based upon the view that these mental defectives are cases of arrest of development and they are like normal children of the age at which their arrest takes place; and that our safest guide in the treatment of these cases comes from a consideration of the wise treatment for the normal child of that age. That this is a correct view is becoming more and more evident every day. The more experiments and tests are made and the more we study the problem of the defective the more we discover and become convinced of this truth.

The foregoing is not proposed for all mental defectives. It is offered as a possible help in view of the practical impossibility of segregating the large number of defectives that we are finding in every community.

Suppose now we go back to the general question — what shall we do with people of low intelligence? Colonize them, says one; sterilize them, says another; educate them, says a third. Each plan has its advocates and each has its difficulties. The first two seem to assume that the people of low intelligence are a different group and should be treated in a very special way; that those of us who are pleased to style ourselves intelligent have the right to deprive these people of something that we enjoy. The third plan suggests that these people are our equals in some things and that they can be educated as we have been educated.

It will be well to examine what facts we have before coming to a decision. Our facts at most are too few to warrant us in neglecting any. To begin with, no student of the problem will admit that these people constitute a different species of humanity. Some intelligence is possessed by all unless possibly the very lowest. It is a question of degree and a question of the need that the individual has of intelligence, in other words of his environment. If an individual cannot adapt himself to his environment,

can we not adapt the environment to him? "This is what colonization does," says the advocate of this method. In theory this is true, in practice it is also often true, but not always. With certain high grades and under certain conditions there is an element of restraint, the colony becomes practically a prison; only under the wisest management, by the most broad-minded policy can this element of restraint be kept out of the mind of the high grade defective. And it is doubtful if it ever can be kept entirely away from the highest grade. Suppose then we are content to colonize as many as can be made contented in the colony, what of the others? It is for these that sterilization is supposed by many to be the panacea. But sterilization seems only to apply to a narrow zone; many of these high grades are regarded as being on the border line, where it is of doubtful justice to take this action. Many other objections are urged.

We may accept the verdict that the facts, particularly those that are set forth in this study, show that we must colonize as many of the feeble-minded as we possibly can, that we must sterilize some and then we discover that we have only tithed the problem, we have not solved it. We still have left one expedient, that of educating them. "But," says some one, "they cannot be educated, they have not mentality enough to take an education." That depends upon our definition of education.

The group that cannot be colonized and many of those indeed who will eventually be colonized, and the group where we are in doubt about the propriety of sterilizing can be trained to a relatively high degree in certain directions. But again, says some one, they will always be vicious and dangerous and a menace to society. There are, however, no facts to prove this. That may sound strange in view of what has already been said in this volume. But it must be remembered that we have studied people, who in addition to their feeble minds, have had a bad environment, have been misunderstood and mistreated.

With a better comprehension of the nature of these persons,

with wiser methods of training in a suitable environment, the viciousness that we sometimes see will seldom, if ever, develop.

Only one thing remains to be considered, their propagation. We have said that no feeble-minded person should marry or become a parent. From the standpoint of an ideal eugenics that cannot be denied. But the ideal and the practical are seldom the same. We must aim at the ideal but take what we can get. The feeble-minded will continue to become parents for many years to come. Let us face the fact and make the best of it. Does not our horror at the mating of the feeble-minded and the production of more feeble-minded offspring arise largely from our experiences with them up to the present time, and is this not complicated by the bad environment and mistreatment of which we have spoken? When we have learned to recognize these people and learned how to treat them, how to train them, will not the situation be entirely changed? May it not be possible that we will find use for all these people of moderate intelligence, and that the production of so many high grade feeble-minded is only the production of so many more people who are able and willing to do much of the drudgery of the world, which other people will not do.

This is not to be understood as advocating such a procedure. The point is made merely by way of emphasizing the fact that when we shall have come to understand these people and to treat them in accordance with their mental condition, their low intelligence, that a large part of our problem will have been solved and that many of the evils that we now complain of will not reappear.

We have said that in spite of all of our efforts, after we have colonized all that we can, these people will become parents; so far as we can see there is only one way to obviate it, that is by a very general practice of sterilization. If the process of vasectomy proves as satisfactory as its advocates believe, it may be that we shall ultimately be willing to sterilize all of these border-

line cases, and then, there will be no longer any objection to their marrying. Indeed it has already been proposed more than once, that when a feeble-minded person wishes to marry he shall be told that, if he is willing to submit to vasectomy, a marriage certificate will be granted and he may enter upon a career where he will be a husband but not a father.

Such a procedure may have many objections and may be repugnant to many of us. Nevertheless, a broad-minded view of the problem, a willingness to consider all possible solutions, requires that this suggestion should be considered in the light of conditions as they will be when our fundamental requirements are achieved, namely, that the feeble-minded are recognized and their degree of mentality and responsibility is understood and they are treated in the manner that they require.

For the sake of clearness let us repeat some of the points of this Chapter.

First: the mere recognition that there is a problem of the feeble-minded will go a long way toward its solution.

Second: a large part of the mental defectives who cannot be segregated may be reasonably and safely cared for in their homes, when we learn to recognize them for what they are, children in intelligence, tho men and women in body.

Third: we must increase our efforts to segregate as many as possible, because for a long time to come there will be a larger number who need colonization, than we can possibly care for.

Fourth: we must have sterilization wisely and carefully practiced for the solution of many individual problems that are not reached by any other method.

In conclusion, we believe that we have demonstrated that feeble-mindedness is sufficiently prevalent to arouse the interest and attract the attention of all thotful people who are interested in social welfare; that it is mostly hereditary; that it underlies all our social problems; that because of these facts it is worthy the attention of our most thotful statesmen and social leaders;

that much of the time and money and energy now devoted to other things may be more wisely spent in investigating the problem of feeble-mindedness; and that since feeble-mindedness is in all probability transmitted in accordance with the Mendelian Law of heredity, the way is open for eugenic procedure which shall mean much for the future welfare of the race.

# BIBLIOGRAPHY

The following selected titles include those referred to in the text, and will serve to introduce the student to the literature of the topics discussed.

With a few important exceptions periodical literature has not been included, and only the most authoritative or important books. Fuller bibliographies will be found in Nos. 1, 2, 4, 7, 17, 19, 24, 25, 30, 32.


1. BARR, MARTIN W. Mental Defectives; Their History, Treatment and Training. 1904. P. Blakiston's Son & Co., Phila.
2. BATESON, W. Mendel's Principles of Heredity. 1909. Cambridge University Press.
3. BINET, A., and SIMON, TH. Le développement de l'intelligence chez les enfants. L'Année Psychol., 1908, Vol. 14, 1–94.
4. CASTLE, WILLIAM E. Heredity in Relation to Evolution and Animal Breeding. Appleton & Company, 1911.
5. CONKLIN, E. G. Heredity and Environment in the Development of Men. Princeton University Press, 1914.
6. DANIELSON, FLORENCE H., and DAVENPORT, C. B. The Hill Folk. 1912. Eugenics Record Office, Cold Spring Harbor, N.Y.
7. DAVENPORT, C. B. Heredity in Relation to Eugenics. 1911. Henry Holt & Co.
8. DAVENPORT, C. B. The Origin and Control of Mental Defectiveness. Pop. Sci. Mon., Jan. 1912, 87–90.
9. DAVENPORT, C. B., and WEEKS, D. F. A First Study of Inheritance in Epilepsy. Journal of Nerv. and Ment. Dis., Nov. 1911, 641–670.
10. ESTABROOK, A. H., and DAVENPORT, C. B. The Nam Family. 1912. Eugenics Record Office, Cold Spring Harbor, N.Y.
11. GODDARD, HENRY H. The Binet-Simon Measuring Scale of Intelligence (Revised Edition). 1911. The Training School, Vineland, N.J.
12. GODDARD, HENRY H. Four Hundred Feeble-minded Children Classified by the Binet Method. Jour. Psycho-Asthenics, Vol. XV, No. 1, September, 1910.
13. GODDARD, HENRY H. Two Thousand Normal Children Measured by the Binet Measuring Scale of Intelligence. Ped. Sem., Vol. XVIII, pp. 232–259, June, 1911.

14. GODDARD, HENRY H. The Kallikak Family. The Macmillan Company, N. Y., 1912.
15. HUEY, EDMUND B. Backward and Feeble-minded Children. Clinical Studies in the Psychology of Defectives, with a Syllabus for the Clinical Examination and Testing of Children. Warwick & York, Baltimore, 1912.
16. JELLIFFE and WHITE. Modern Treatment of Nervous and Mental Diseases. 1913. Lea & Febiger, Phila.
17. JOHNSON, G. E. Contribution to the Psychology and Pedagogy of Feeble-minded Children. Ped. Sem., Vol. III, No. 2, 246–301.
18. KELLICOTT, WM. E. The Social Direction of Human Evolution. New York, D. Appleton & Co., 1911, pp. 240.
19. LAPAGE, C. P. Feeble-mindedness in Children of School Age. 1911. University of Manchester Press.
20. PUNNETT, R. C. Mendelism. 1911. The Macmillan Company, N. Y.
21. ROSANOFF, A. J., and ORR, F. I. Study of Heredity in Insanity. Am. Jour. Insanity, October, 1911.
22. SEGUIN, EDWARD. Idiocy; and its Treatment. 1907. Teachers College, Columbia University.
23. SHERLOCK, E. B. The Feeble-minded. 1911. The Macmillan Company.
24. SHUTTLEWORTH, G. E., and POTTS, W. A. Mentally Deficient Children. 1910. P. Blakiston's Son & Co., Phila.
25. THOMSON, J. ARTHUR. Heredity. Putnam, 1908.
26. THORNDIKE, EDWARD L. The Measurement of Twins. Science Press, New York, 1905.
27. TOWN, CLARA HARRISON, Ph.D. A Method of Measuring the Development of the Intelligence of Young Children by Alfred Binet and Th. Simon. (Trans.) Courier Co., Lincoln, Ill., 1912.
28. TREDGOLD, A. F. Mental Deficiency (Amentia). 2d Edition, 1914. Ballière, Tindall and Cox, London.
29. WHIPPLE, GUY MONTROSE. Manual of Mental and Physical Tests. Revised edition. 2 Vols. Warwick and York, Baltimore, 1914.
30. WILSON, E. B. The Cell in Development and Inheritance. N. Y., The Macmillan Company, 1900.
31. WINSHIP, A. E. Jukes-Edwards; A Study in Education and Heredity. R. L. Myers & Co., Harrisburg, Pa., 1900.
32. WALTER, HERBERT E. Genetics. An Introduction to the Study of Heredity. The Macmillan Company, 1913.

# INDEX


A

Accident Group, defined, 47.
Accidental cases, defined, 438.
Accidents before or at birth, 448–455.
  after birth, 455–460.
Acquired character, non-transmissibility of, 559.
Acromegaly, 429.
Admission blanks, 23.
Age of father, effect of, on mentality of children, 178.
  age of parents in Mongolian cases, 451–452.
Alcohol, 281.
  in the father, 479.
  in the mother, cases, 476.
  doubles the number of feeble-minded children in a family, 490.
  and tuberculosis, remarkable case, 209.
  and weak will, 12.
Alcoholic, means drunkard, 480.
  man reformed, instance, 13.
Alcoholics, percentage feeble-minded, 12.
Alcoholism, 10.
  at the time of conception, 474–475.
  as a cause discussed, 474–492.
Almshouse case, 58, 245, 312.
  came from, 292.
  Gertie's mother in, 352.
  in Poland, 431.
Almshouses, inmates mentally defective, 17.
Ament, defined, 3–4.
Animation at birth, deficient, 411.
Arithmetic, samples of work in, 103–104.
Arrest of development and Mendelism, 546.
Ataxia, case of, 188, 197, 390.
Autobiography of Case 5, 58.

B

Backward child, proved to be feeble-minded, 172, 183.
Beri-beri, 375.
Billikens' case, 382.
Binet, Alfred, 19.
  quoted, 573.
  age of our children, 440.
Binet-Simon Measuring Scale of Intelligence, 4, 48.
  differentiates insanity from feeble-mindedness, 504.
Binet tests, typical answers, 51, 112, 141, 146, 154, 181, 193, 205, 213, 220, 233.
  seven on same case, 183.
Biological problem, the, 29.
Birth, difficult, 354, 356.
Bite of spider, assigned cause, 268.
"Black Dutch," 120.
Blackwell's Island, 243.
Blindness, 521–522.
  8 cases on one chart, 160.
  7 cases on one chart, 193.
  2 cases on one chart, 86, 232.
Blood poisoning, suffered from, 354.
Blue baby, lead poisoning, 322, 365.
Brachydactylism, 185, 238.
Brain disease, indications of, 286.
Bridgman, Dr. Olga, 8, 14.
Bright's Disease in grandparent, 297, 339, 344, 409.
Burt, Cyril, quoted, 556.
Button, swallowed, cause of mental defect, 266.

C

Cancer, in two generations, 302, 325, 329, 351.
Carrier of defect, 292.
Carson, Dr. J. C., 450.
Castle, W. E., quoted, 545.
Castle Garden, 234.
Cataracts, 329.
  congenital, 328.
  double congenital, 372.
  hereditary, 329.
Cause, no assignable, 405.
  assigned, defined, 55.
Causes, 435.
  accepted uncritically, 436.

Causes, illogical conclusions as to, 435, 449.
rival, 447.
assigned by parents or physicians, 436–437.
Cephalhematoma, 358.
Cerebral tumor, 253.
Chandelier, struck head against, 354.
Charities, Department of, 584.
Charity, objects of, 53.
Chart, exceptionally large, 4 sections, 159–161.
6 sections, 118–120.
10 sections, 128–131.
3 sections, 251.
average number of persons per, 466.
Charts, number of, in each group, 466.
classification of, 47.
field workers', 25.
total individuals on, 466.
Chicken-pox, case of, 348.
Children of alcoholic parents, 474–492.
illegitimate, 499.
number of, per mating, 471.
two from a family in the Training School, 51, 78, 82, 133, 196, 226, 227, 235, 243, 280.
Chromosomes, defined, 535.
Classification, an industrial, 581.
Cleft palate, 91, 304.
Club-foot, case of, 322.
Colonization, 566, 582, 587, 588.
Colony, the, a prison, 587.
Colored children in a white family, 550.
Colored girl, an attractive little, 384.
case of, 219.
Conditions associated with feeble-mindedness, 473, 532.
Consanguinity, 523–525.
list of charts showing, 523.
remarkable case of, 368.
Convulsions due to whipping, 382.
Corner family, the, 40.
Correspondence, clandestine, 56.
Cretinism, case of, 361.
Cretinoid type, case of, 410.
Crime, the problem of, 6.
Crimes of feeble-minded, 9.
Criminal, punishment of, 7.
what is to be done with the, 569.
Criminality, list of charts showing, 516.
depends upon two factors, 515.
and feeble-mindedness, 514–518.
not hereditary, 8.
Criminals, per cent defective, 7.
Cripples, hereditary, 271.

D

Data, incomplete, 21.
manner of obtaining, 22.
reliability of, 21.
Davenport, Dr. C. B., 460, 538.
Deaf, cases born, 389.
our children, 362, 421.
Deafness, 521–523.
2 cases on one chart, 99, 245, 253, 278, 331, 388.
Defect, not apparent until ages 7–10, 184.
Defective delinquent, problem of the, 574.
Defectives number of, in the United States, 582.
recognized, 583.
Delirium tremens, 335, 445.
Deprivation, case backward by, 384.
Determiners in the human chromosome, 540.
Diagnosis, wrong, 32.
Diagram showing the six possible matings, 549.
showing effect of alcohol, 485.
Diseases associated with feeble-mindedness, 473.
Drawings, 79, 84, 111.
merry-go-round, 107.
by a low imbecile, 316.
by a cretin, 362.
by a case of dementia præcox, 424.
Drug fiend, 258.
Drunkard, the children of the habitual, 475.
what is to be done with, 570.
Drunkenness, 10.
Duplex, the term defined, 537.
"Died in infancy" includes all under two years, 471.
Dwarfness, cases of, 52, 205, 246, 387.
Dynamometer, a measure of intelligence, 509.

E

Echolalia, inclined to, 386, 397.
Education, not mentality enough to take, 587.
Emerick, Dr. E. J., 550.
Employers' Liability Law, 584.
Environment, effect of, 85, 89, 116, 554.
Environment determines, 573.
in relation to feeble-mindedness, 11.
must be simplified for defectives, 578, 587.
Epilepsy, and the Binet Test, 513.
determining, 30.

Epilepsy, feeble-mindedness and, 512–514.
list of charts showing, 514.
Epileptic, Julius Cæsar, 29.
Napoleon, 29.
our children, 168, 227, 248, 257, 267, 273, 275, 276, 309, 314, 335, 350, 395, 401.
St. Paul, 29.
Eugenics, 558.
case of non-eugenic matings, 204.
Eye defect, 208, 321.

F

"F?", meaning of, 22.
Fall, severe, possible cause of defect, 401.
Fecundity of feeble-minded women, 472.
Feeble-minded, both parents, 561.
vicious, a menace to society, 582.
children in second marriage, none in first, 185, 209, 292.
limits of, 573.
children of feeble-minded parents, exceptions, 95, 116, 129, 145, 235.
per cent of, in institutions, 528.
defined, 3, 4.
sex of, 467.
Feeble-mindedness, diseases associated with, 473–532.
and criminality, 8.
and alcohol, 10.
and white slavery, 13.
not detected at first examination, 32.
hereditary, at the basis of some problems, 572.
possible cases of sporadic, 215, 460–462.
Feet, malformed, 223, 322.
toes webbed, 238, 312.
Field work, 24.
Field workers, work of, tested, 30.
qualifications of, 23–24.
employing, 23.
Field Worker's, sample report, 40–45.
report, 293, 352.
Fingers and toes, imperfect, shown in second marriage not in first, 185.
Fishermen, return of the, 475.
Fistula, recto-vaginal, 227.
Friedreich's ataxia, case of, 337, 445.
Fright, defect caused by, 312.
Frightened by being held against a piece of fur, 313.

G

Genius, 2.
and feeble-mindedness, 510–511.
and insanity, 511.
Geography studied, 105, 427.
Germ cell, the, 559.
plasm, is it affected, 446.
German, studied, 283.
Goitre, 527.
cases of, 100, 122, 305, 310, 329, 433.
Griffiths, Miss Jane, 25.
Grip, defect noticeable after the attack of, 297, 366.
at four months, 305.
Groups, fundamental, No. N, F, etc., in each, Table, 467.
six fundamental, 47.

H

Habit, *vs.* weak will, 12.
and intemperance, 12.
Hack Tuke, quoted, 435.
Hair-cut, frightened at the time of the first, 230.
Hair long, born with, 361.
Handwriting, sample of, 93, 107, 149, 151, 162, 406.
Healy, Dr. William, 327.
Heart trouble, three generations of, 314.
hereditary, 320.
Hereditary feeble-mindedness plus disease, 439.
Hereditary Group, 438.
defined, 47, 437.
"Hexen Kuche," 293.
History studied, 427.
Horse, kicked by, 336.
Hot weather, crazy from, 295.
Head, large, three generations of, 36.
Hydrocephalus, cases of, 300, 391, 394, 426.

I

Idiots, defined, 3, 4.
Idiot savant, 108, 424, 465.
Illegitimate children, 499.
Imbecile, defined, 3, 4.
Immigration officers passed, 74, 122, 201, 234, 238, 253, 259, 290, 375, 380, 431, 432.
Immoral family, remarkable, 215.
Incapacity, 5.
Incest, case of, 118, 158, 191, 214, 343.
Incorrigible, 54, 239.
Indian blood, 219.
Industrial classification, 580.
Infantile paralysis, case of, 379, 386.
Information, sources of, 49.

Injured in utero, 337.
Insane, not feeble-minded case, 423.
Insane, drawings of, 423.
sent to Hospital for, 155, 296, 419.
Insanity, and feeble-mindedness, 504–510.
and genius, 511.
case of adolescent, 58.
"Memoranda" by case of, 60–70.
determining, 30.
indicated by Binet Test, 154, 296, 505.
list of charts showing, 506–507.
manic-depressive, 4th attack, 433.
shows symptoms of, 122, 165, 255, 286, 288, 307, 328, 339, 360, 385, 397.
Instinct, maternal, utilized, 186.
sexual, under-developed, 497.
Institutions, in other, 527–528.
reformatory, per cent defective in, 9.
Instrumental delivery, cause of mental defect, 360.
deliveries, no. of cases due to, 449.
Instruments, use of, as cause of mental defect, 447.
Intelligence beyond mental age, 582.
difference in, of brother and sister, 81.
general, 557.
grades of, 2.
levels of, 576.
transmitted, 438.
Intemperance, 10.
Ireland quoted on alcohol, 475.

J

James, William, quoted, 557.
Japan, born in, 375.

K

Kallikak Family, Case 91 related to the, 204.
Kallikak, Deborah, 95.
Family, quotation from, 28.
Kite, Elizabeth S., 24.

L

Laitinen, M. D., Professor Taaz, quoted, 487.
Lameness, inherited, 143.
Lazy boy, the, 17.
Lead poisoning, 321, 365, 444.
Letters of children, sample, 87, 132, 137, 141, 146, 152, 154, 286, 357, 377, 378, 392, 406, 422.
from a mother, 71, 265.
love, 57.
of Wm. T., 79.
about party, 319.
to Santa Claus, sample, 73, 75, 80, 83, 93, 158.
Letters used around the squares and circles, meaning of, 49.
Levels of intelligence, 572.
transmitted, 575.
Liquid oozed from head, 333.
Longevity, case of, 429.

M

Marasmus assigned as cause of mental defect, 410.
Marriage of feeble-minded persons, 561.
allowable, 588.
Marriages under varying conditions, 561–563.
Masturbation assigned as cause of mental defect, 423.
Matings, types of, used in study of Mendelism, 551.
Measurement of twins, 525.
Melancholia, inherited, 368.
Mendelian law, and human heredity, 548–557.
and our results, 553–556.
Mendelism, the explanation, 534.
Mendel's Law, 533–538.
recessive character of feeble-mindedness shown by charts *178, 189, 204, 260, 263*.
Meningitis, 457–460.
cases, 390–404.
morbidity of, 457.
Mental age, defined, 48.
of defectives and normals, 579.
in relation to feeble-mindedness, 440–443.
intelligence beyond, 582.
Mental levels, 572.
Mental defectives, problem of caring for, 578–588.
Mentality, determined, 27–30.
Merry-go-round, plan for, 107.
Microcephalic, 349, 421.
Microphthalmic eyes, case of, 207.
Migraine, 526.
cases of, 246, 252, 269, 289, 300, 323, 340, 346, 349.
Miscarriage caused by drugs, 271, 356, 360.
Mongolian cases, 366–374.
Group defined, 450.
in collateral branch of defective family, 278.

Mongolian, type, congenital but not hereditary, 368.
type, other defectives in family, 371.
type, revised chart, 31–32.
Mongolians, distribution of ages of, 452.
mentality of, 453.
ages of parents of, 452.
Moore, Miss Maude, 25.
Moron, the, 579.
defined, 4.
recognized, 583–585.
difficulty of determining, 30.
Morons, heritability of, 443.
percentage of, 6.
Mother instinct aroused, 186.
Music, sensitive to, case, 402.
Musical ability, a family trait, in case, 168, 284.
Mutes, six cases of, 86.
our child, 289, 307.

N

"N?", meaning of, 22.
Ne'er-do-wells, 18.
what is to be done with the, 570.
Neuropathic ancestry, 47, 437, 443–448.
cases, 318–350.
Neurotic, 526.
Newark daily paper quoted, 237.
No Cause Group defined, 48.
discovered, 460–462.
Normal child of two feeble-minded parents, 95, 116, 129, 145, 235.
Nulliplex, the term defined, 537.
Number work of Bennie T. (facsimile), 149–150.

O

Obesity, hereditary tendency to, 312.
Offspring, effect of alcohol in producing non-viable, 487.
Otitis media, given as cause, 334.

P

Palate, no, 374.
cleft, 91, 304.
Pantomime, went thru tests in, 247.
Paper cutting, 364.
Paralysis, 500–503.
charts showing, 500–501.
sleeping, 313.
Parents, normal but alcoholic, 486.
Pauperism, 16.
Paupers, what is to be done with, 569.
Pedagogical problem, the, 20.
Physicians, carelessness of, supposed cause of mental defect, 449.
Piano, illustration, 541.
Pineal gland, used, 428.
valuable effect of, 382.
Police Department, 584.
Pott's disease, case of, 217.
Premature births, that do not result in defective children, 450.
7 months, 332, 419.
Prison report on Peter K., 173.
Probability *vs.* certainty, 38.
Probably Hereditary Group, defined, 47, 437.
cases, 280–317.
the group, 439–440.
Probation system, 584.
Problems, four, to be solved, 19.
Program, for Morning Assembly, reproduced, 405.
Prostitutes, per cent feeble-minded, 14–15.
what is to be done with the, 570.
Prostitution, 13.
keeper of house of, 130, 237.
Psychological problem, the, 19.
Public Schools must register defectives, 583–585.
Punishment, idea of, 7.
Pyromania, case of, treated, 324.

R

Reformatories, per cent defective in, 9.
Reform School, a case in, 416.
Registration bureau, 583.
Related cases, Cases *43* and *97*; Cases *30* and *107*; *21* and *9*; *13* and *101*; *64* and *140*; *70* and *229*; *145* and *112*; *85* and *102*; *91* and Kallikak; *175* and *86*.
Religious conversion and intemperance, 13.
tendency, 216, 356, 424.
Report, a sample, 41.
from Children's Home Society, 163–164.
of Massachusetts Vice Commission quoted, 15 (footnote).
Responsibility, grades of, 2.
limits of, 3.
Reversion to type, feeble-mindedness as a, 508.
Revised charts, Nos. *1*, *17*, *97*, *170*, *177*, *189*, *250*, *255*, *264*, *32–39*.
Revolution, soldier of American, remembered, 28.
Rosanoff, Dr. A. J., 538.

S

"Scattering," in Binet Tests, explained, 505.
indicates insanity, 154, 296.
School attainments of children of various mental ages, 577.
Self-supporting, moron, 584.
Sex, instinct, 56.
of feeble-minded, 467.
under-developed, 497.
Sexual immorality, in our cases, 497–499.
Shop-girls, 14.
Shuttleworth, Dr. G. E., 450.
"Simplex," defined, 537.
Sleeps, never, 434.
Smallpox, 300.
Smith, Florence Givens, report by, 40.
Social problem, the, 19.
Speech defect, case of, 113, 118, 382.
hereditary, 91, 227.
Speech training, 101.
Spelling by Bennie T. (facsimile), 151.
Spontaneous origin of feeble-mindedness, 460.
possible cases of, 215, 461–462.
State Hospital, case in, 155, 296, 419.
State's Prison, served a term in, 327.
Sterilization, 566, 587–588.
Stigmata of degeneration, 171, 243.
Stockard, Dr. C. R., quoted, 475.
Strangulation, partial, 361.
Suicide, some cases of, 55, 167, 308, 344, 350, 369
Survivors, total, in each group, 468.
Swiss Lake Dwellers, 29.
Symbols, explanation of, 48.
Syphilis, 518–521.
case of, latent thru three generations, 324.
typical cases, 53, 216, 281, 335.

T

Table I, Number in each group, 466.
II, Number N, F, etc., in each group, 467.
III, Total survivors in each group, 468.
IV, Condition of children for each kind of mating, 469.
V, Distribution of our children and their sibs, 472.
VI, Distribution of diseases and conditions, 473.
VII, Alcohol, condition of parents of our children, 476.
Table VIII, Number alcoholic, each group, 480.
IX, Alcoholic and non-alcoholic parents, 481.
X, Feeble-minded and normal children in alcoholic and non-alcoholic families, 488.
XI, Parents, alcoholic, paralytic, epileptic, etc., 494.
XII, Frequency and distribution of sex, 498.
XIII, Paralysis, 500.
XIV, Insanity, 506.
XV, Epilepsy, 514.
XVI, Criminality, 516.
XVII, Syphilis, 519.
XVIII, Persons in Institutions, 528.
XIX, Alcohol, tuberculosis, etc., in the fundamental groups, 529.
XX, Alcohol, tuberculosis, etc., in the fundamental groups, 531.
XXI, Summary of Tables, 532.
Tempers, violent, 256.
Tennis playing, Gussie's account of, 65.
Thorndike, E. L., 525.
"Ticks" explained, 565.
Tooth extracted, diagrams drawn by defective child, 316.
Tragic story of Gertie, 352.
Training, kind of, must be learned, 585.
purpose of, 586.
Tredgold, quoted, 475.
Truants, 18.
per cent feeble-minded, 19.
Tuberculosis, 495.
Tumor on the brain, 434.
Twins, 525–526.
one normal, one feeble-minded, 197, 251, 260, 273, 304.
Typhoid fever, cause of defect, 381.

U

Unclassified Group, defined, 48.
discussed, 462–465.
cases, 413–434.
Undesirable, 421.
Unit character defined, 534.
is feeble-mindedness a, 539–547.

V

Vagabond, a, 245.
Vasectomy, 588.

Vasectomy and marriage, 589.
Vice Commission Report (Mass.), 15.
Viciousness will seldom develop, 588.

W

Walk, spells of inability to, 420.
Wanderers, 527.
  cases of, 91, 210, 276, 336, 361, 367.
Wassermann, Negative, Case Nos., *84, 91, 165, 186, 193, 202, 215, 293.*
  Positive, Case Nos., *100, 215, 234, 252, 253, 249, 263, 279, 347, 350, 364, 365, 398, 399, 404, 430.*
  Test applied to our children, 520–521.
Webbed fingers and toes, 238, 312.
Weeks, Dr. David F., 538.
Whiskey, fed on, 382.
White slave traffic, 13.
Whooping-cough, 456.
  as a cause, 377.
  severe cases of, 309, 380, 395.
Will, weakness of, and alcohol, 12.
Woodwork, remarkable effect of, on Walter K., 170.
Writings of a case of suspected dementia præcox, 60–70.
  Story by Bennie T. (facsimile), 149.
  Story of spiders, 135.
Wundt, quoted, 557.

THE following pages contain advertisements of books by the same author or on kindred subjects

*"A Remarkable Human Document — A Record of Astonishing Interest"*

# THE KALLIKAK FAMILY

## A STUDY IN THE HEREDITY OF FEEBLE-MINDEDNESS

By HENRY H. GODDARD

Director of the Research Laboratory of the Training School at Vineland, N. J., for Feeble-Minded Girls and Boys

*Cloth, 8vo, $1.50 net*

**A FEW OF MANY NOTABLE COMMENTS**

"This history is the most important one that exists as an exposition of the transmission of feeble-mindedness through many generations."
— *Johns Hopkins Hospital Bulletin.*

"Dr. Goddard's book gives the thoughtful reader much food for reflection. It demonstrates most forcibly that the feeble-minded in our midst constitute a distinct menace to our social life." — *Medical Times.*

"No more striking example of the supreme force of heredity could be desired."
— *The Dial.*

"The most illuminating and complete of all the studies in heredity that have ever been made, with the view of showing the descent of mental deficiency."
— *Bulletin of The Medical and Chirurgical Faculty of Maryland.*

"This is the most convincing of the sociological studies brought out by the eugenics movement."— *The Independent.*

"The book is an exceedingly important monograph and will be of interest to all students of heredity and eugenics as well as to social workers and reformers."
— *Social Diseases.*

"Dr. Goddard has made a 'find'; and he has also had the training which enables him to utilize his discovery to the utmost." — *American Journal of Psychology.*

---

THE MACMILLAN COMPANY

**Publishers 64-66 Fifth Avenue New York**

***BOOKS OF KINDRED INTEREST***

# An Introduction to the Study of Heredity

By HERBERT EUGENE WALTER

Assistant Professor of Biology in Brown University

*Cloth, 12mo, 264 pages, with 72 figures and diagrams, $1.50 net*

An excellent summary of the more recent phases of the questions of heredity which are at present agitating the biological world. The author goes unerringly to the fundamentals of our most recent advances, yet the work is so simple in language and so plain in illustration that anyone interested in either animal or plant breeding can read it to advantage. It is not only a good text to put into the hands of students taking courses in breeding, heredity, genetics, eugenics, or evolution, but is also used as a required supplementary text in introductory courses on general biology or zoölogy.

# The First Principles of Evolution

By S. HERBERT

*Cloth, 8vo, 346 pages, containing 90 illustrations and tables, $2.00 net*

Though there are hosts of books dealing with Evolution, they are either too compendious and specialized, or, if intended for the average reader, too limited in their treatment of the subject. In a simple, yet scientific, manner, the author here presents the problem of Evolution comprehensively in all its aspects.

**CONTENTS**


INTRODUCTION — Evolution in General.
SECTION I — Inorganic Evolution.
The Evolution of Matter.
SECTION II — Organic Evolution.
PART I — The Facts of Evolution.
Morphology.
Embryology.
Classification.
Palæontology.
Geographical Distribution.
PART II — Theories of Evolution.
SECTION III — Superorganic Evolution.
Social Evolution.
CONCLUSION — The Formula of Evolution.
The Philosophy of Change.


# The Meaning of Evolution

By SAMUEL C. SCHMUCKER

*Cloth, 12mo, 298 pages, illustrated, $1.50 net*

What is our origin?
What are we to be?
Can we help the great advance?

Professor Schmucker in this book sets about to meet such questions. The ground of the evolutionary idea itself developed by Charles Darwin, its modification by later students and the present state of the question, are told in language wholly devoid of technical terms. The work is clear, comprehensive, but not detailed, and entirely reverent.

---


THE MACMILLAN COMPANY

Publishers 64-66 Fifth Avenue New York

***BOOKS OF KINDRED INTEREST***

# MENDELISM

By R. C. PUNNETT

Fellow of Gonville and Caius College, Cambridge; Professor of Biology in the University of Cambridge

*New edition revised and enlarged. Cloth, 12mo, illustrated, $1.25 net*

"By far the best popular account of Mendelism yet published . . . a model of popular scientific writing, recalling Huxley at his best. . . ." — *The Dial.*

# THE LAWS OF HEREDITY

By G. ARCHDALL REID, M.B., F.R.S.E.,

With a Diagrammatic Representation by HERBERT HALL TURNER, Savilian Professor of Astronomy, Oxford.

*Cloth, 8vo, xi+548 pages, $5.50 net*

This present volume is a discussion of the entire subject, the aim being to make it comprehensible to the general reader, as well as to the scientific investigator.

# HEREDITY AND SOCIAL PROGRESS

By SIMON N. PATTEN, PH.D., LL.D.,

Professor of Political Economy, University of Pennsylvania; Author of "The New Basis of Civilization," etc.

*Cloth, 12mo, $1.25 net*

"It is a bold deduction, wrought out with perfect logic, and shows one common principle active in every advance from the lowest unicellular organism to the highest social institution." — *Annals American Academy.*

# AN INTRODUCTION TO EUGENICS

By CATHERINE AND W. C. DAMPIER WHETHAM

*Paper, 8vo, $0.35 net*

The present little book outlines the history and methods of this study of eugenics under social control that may improve or impair the racial qualities of future generations either physically or mentally.

# THE FIRST PRINCIPLES OF HEREDITY

By S. HERBERT, M.D. (Vienna), M.R.C.S. (Eng.), L.R.C.P. (Lond.).

*Cloth, 8vo, illustrated, $2.00 net*

This book is the only one of its scope in the English language.

---

THE MACMILLAN COMPANY

**Publishers** **64-66 Fifth Avenue** **New York**

# The Fitness of the Environment

By LAWRENCE J. HENDERSON

Assistant Professor of Biological Chemistry in Harvard University

*Cloth, 12mo, $1.50 net*

"Darwinian fitness is compounded of a mutual relationship between the organism and the environment. Of this, fitness of environment is quite as essential a component as the fitness which arises in the process of organic evolution; and in fundamental characteristics the actual environment is the fittest possible abode of life." Such is the thesis which this work seeks to establish through discussions of the physical and chemical characteristics of life and cosmogony, and through critical study of the properties of matter in their biological relations.

Water and carbonic acid are shown to be the primary constituents of the environment. Analysis shows their properties, together with those of the component elements, hydrogen, oxygen, and carbon, to make up a series of maxima, among all known compounds and elements, so numerous, so varied, and so highly favorable, to the organic mechanism that the fitness of the world for life assumes an importance not less than the fitness which has been won by adaptation in the course of organic evolution.

A final chapter discusses the bearing of these conclusions upon theories of organic evolution, modern vitalism, including the views of M. Bergson, and the old natural theology, and seeks to harmonize implications of design with the mechanistic view of nature.

---

THE MACMILLAN COMPANY

Publishers 64-66 Fifth Avenue New York

,

4 mu—